DI08O–16

DTC	14	Actuator Mechanical Malfunction

CIRCUIT DESCRIPTION

The circuit detects the rotation position of the actuator control plate and sends a signal to the ECU.

DTC No.	Detection Item	Trouble Area
14	Cruise control actuator mechanical malfunction.	• Actuator lock: (motor, arm) • Actuator motor • Cruise control ECU

WIRING DIAGRAM

See page DI–290.

INSPECTION PROCEDURE

1	Check cruise control actuator arm locking operation

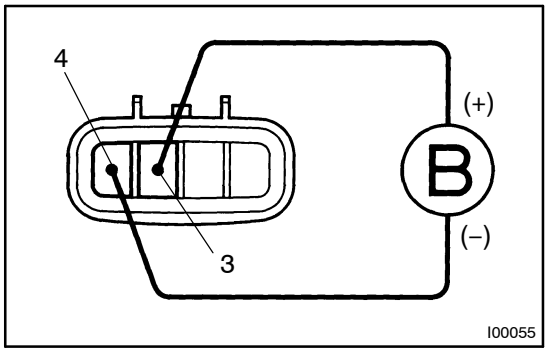

PREPARATION:

(a) Turn ignition switch OFF.

(b) Disconnect the actuator connector.

CHECK:

Connect the positive (+) lead from the battery to the terminal 3 of actuator and the negative (–) lead to terminal 4.

NOTICE:

Do not connect the high tension cables to the wrong battery terminal. The cruise control actuator will be damaged.

Move the control plate by hand.

OK:

Control plate doesn't move.

NG → **Replace cruise control actuator.**

OK

2	**Check cruise control actuator operation.**

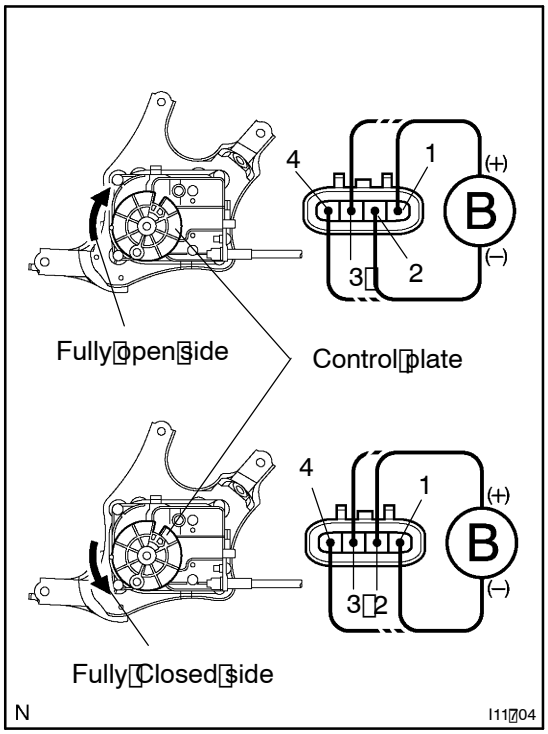

PREPARATION:

(a) Turn ignition switch OFF.

(b) Disconnect the actuator connector.

CHECK:

Connect the positive (+) lead from the battery to terminals 1 and 3 of actuator, connect the negative (–) lead to terminals 2 and 4 of actuator.

OK:

Control arm moves to fully open side

CHECK:

Connect the positive (+) lead from the battery to terminals 2 and 3 of actuator, connect the negative (–) lead to terminals 1 and 4 of actuator.

OK:

Control arm moves to fully closed side

NG	**Replace cruise control actuator.**

OK

3	**Check harness and connector between cruise control ECU and cruise control actuator (See page IN–30).**

NG	**Repair or replace harness or connector.**

OK

Check and replace cruise control ECU (See page IN–30).