DI08R–18

Control Switch Circuit (Cruise Control Switch)

CIRCUIT DESCRIPTION

This circuit carries the SET/COAST, RESUME/ACCEL and CANCEL signals (each voltage) to the ECU.

WIRING DIAGRAM

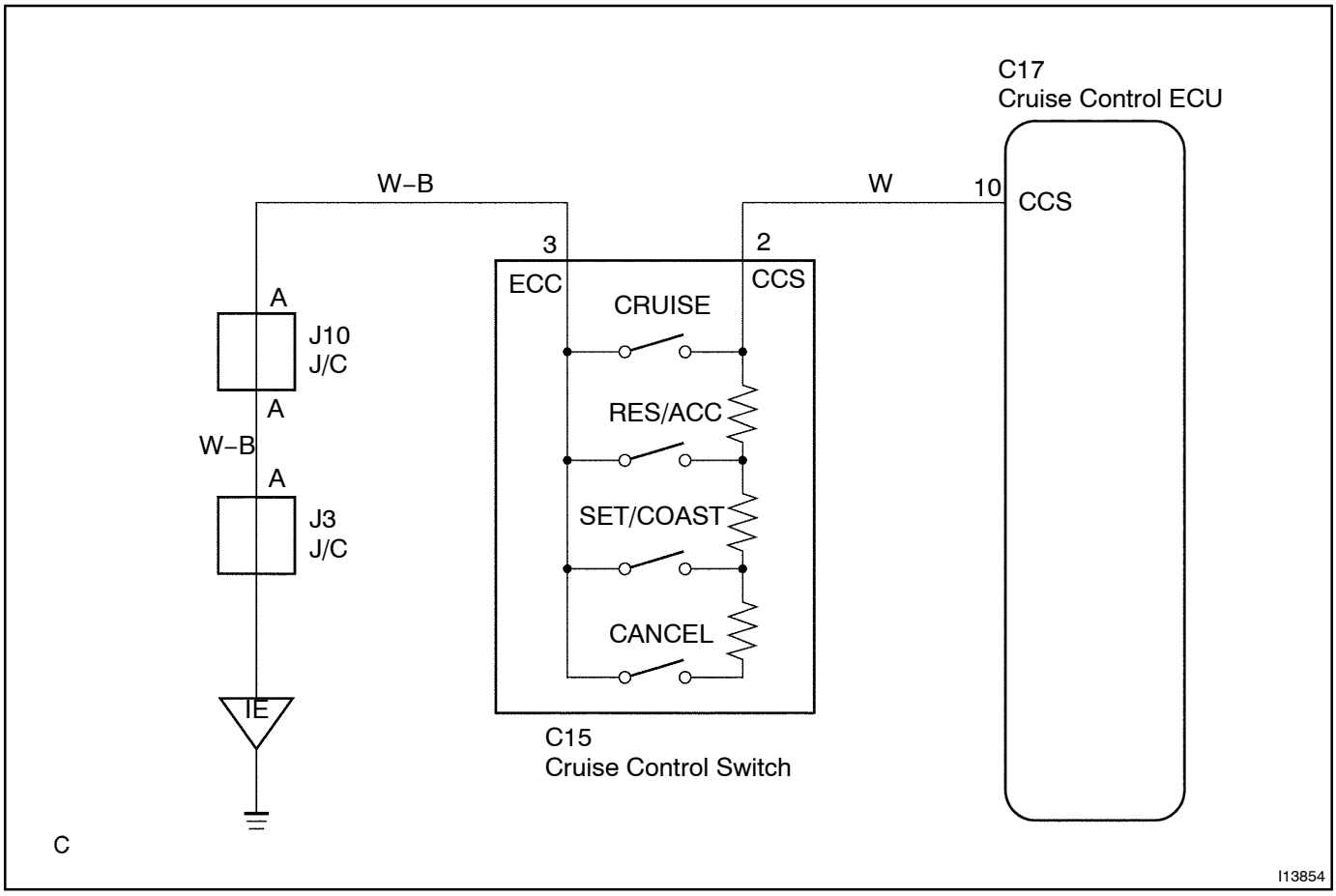

INSPECTION PROCEDURE

1	**Input signal check.**

Input Signal	Indicator Light Blinking Pattern
SET/COAST switch	ON / OFF — 2 Pulses
RESUME/ACCEL switch	ON / OFF — 3 Pulses
CANCEL switch	ON / OFF — SW OFF, SW ON

PREPARATION:
See input signal check on page DI–277.
CHECK:
Check the indicator light operation when each of the SET/COAST, RESUME/ACCEL and CANCEL is turned on.
OK:

SET/COAST, RESUME/ACCEL switch
The signals shown in the table on the left should be output when each switch is ON. The signal should disappear when the switch is turned OFF.
CANCEL switch
The indicator light goes off when the cancel switch is turned ON.

OK → **Wait and see.**

NG

2	**Check voltage between terminals CCS of cruise control ECU connector and body ground.**

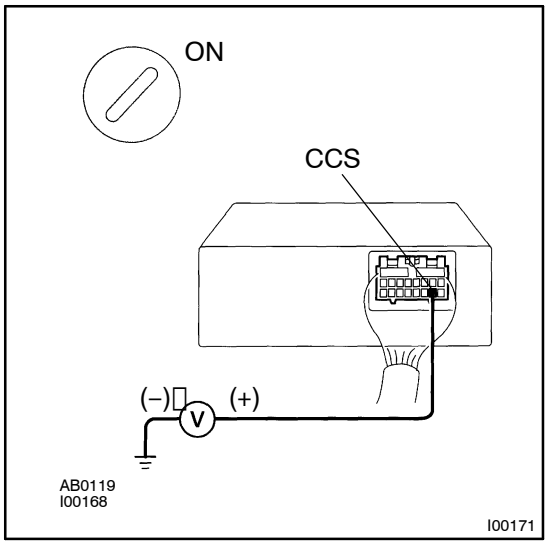

PREPARATION:
(a) Remove the ECU with connector still connected.
(b) Turn ignition switch ON.
CHECK:
Measure voltage between terminals 18 of ECU connector and body ground, when each of the SET/COAST, RESUME/ACCEL and CANCEL is turned ON.

Switch position	Resistance (V)
Neutral	10 – 16 V
RES/ACC	0.8 – 3.7 V
SET/COAST	2.5 – 6.3 V
CANCEL	4.2 – 8.8 V

NG → **Proceed to next circuit inspection shown in problem symptom table (See page DI–286).**

OK

3	**Check control switch.**

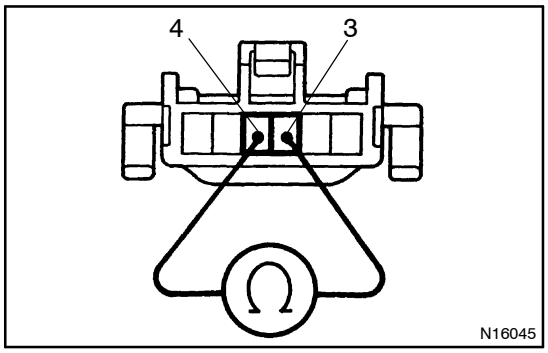

PREPARATION:

(a) Remove steering wheel center pad.

(b) Disconnect the control switch connector.

CHECK:

Measure resistance between terminals 3 and 4 of control switch connector when control switch is operated.

Switch position	Resistance (Ω)
Neutral	∞ (No continuity)
RES/ACC	50 – 80
SET/COAST	180 – 220
CANCEL	400 – 440

NG → **Replace control switch.**

OK

4	**Check harness and connector between cruise control ECU and cruise control switch, cruise control switch and body ground (See page IN–30).**

NG → **Repair or replace harness or connector.**

OK

5	**Input signal check (See step 1).**

OK → **Wait and see.**

NG

Check and replace cruise control ECU (See page IN–30).