DI090–30

CRUISE MAIN Indicator Light Circuit

CIRCUIT DESCRIPTION

When the cruise control main switch is turned ON, CRUISE MAIN indicator light lights up.

WIRING DIAGRAM

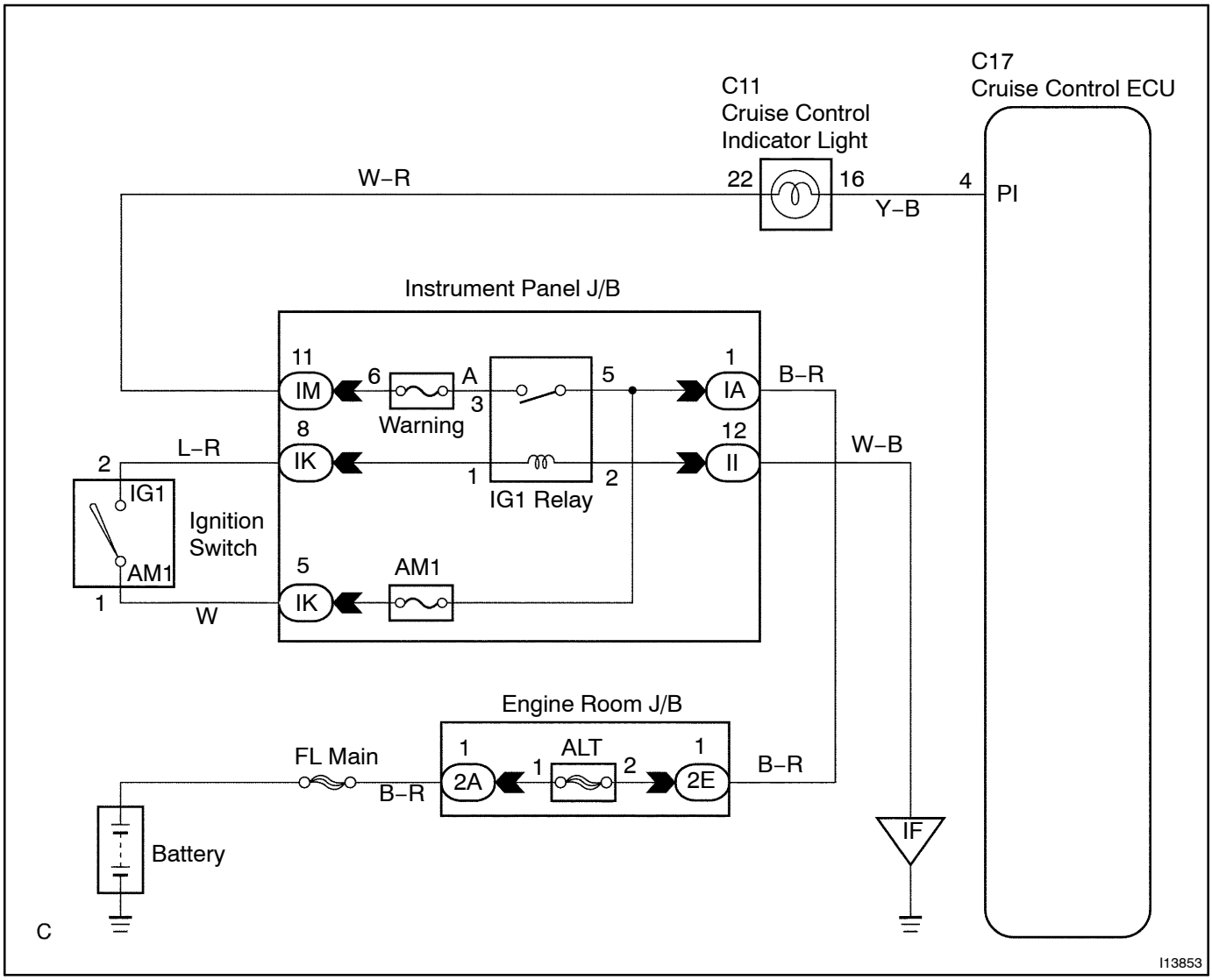

INSPECTION PROCEDURE

1	Check voltage between terminals PI and GND of cruise control ECU connector.

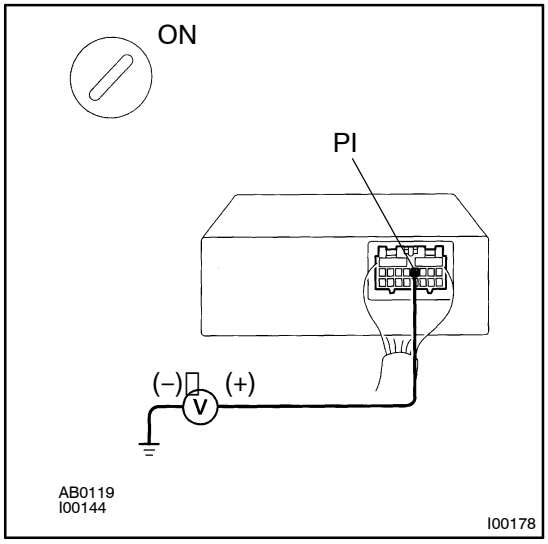

PREPARATION:
Turn ignition switch ON.

CHECK:
Measure voltage between terminals PI and GND of cruise control ECU connector when main switch is ON and OFF.

OK:

Switch position	Voltage
OFF	10 – 16 V
ON	Below 1.2 V

OK → **Proceed to next circuit inspection shown in problem symptom table (See page DI–286).**

NG

2	Check combination meter (See page BE–48).

NG → **Replace combination meter.**

OK

Check and replace cruise control ECU (See page IN–30).