DI091–17

Diagnosis Circuit

CIRCUIT DESCRIPTION

This circuit sends a signal to the ECU that outputs DTC.

WIRING DIAGRAM

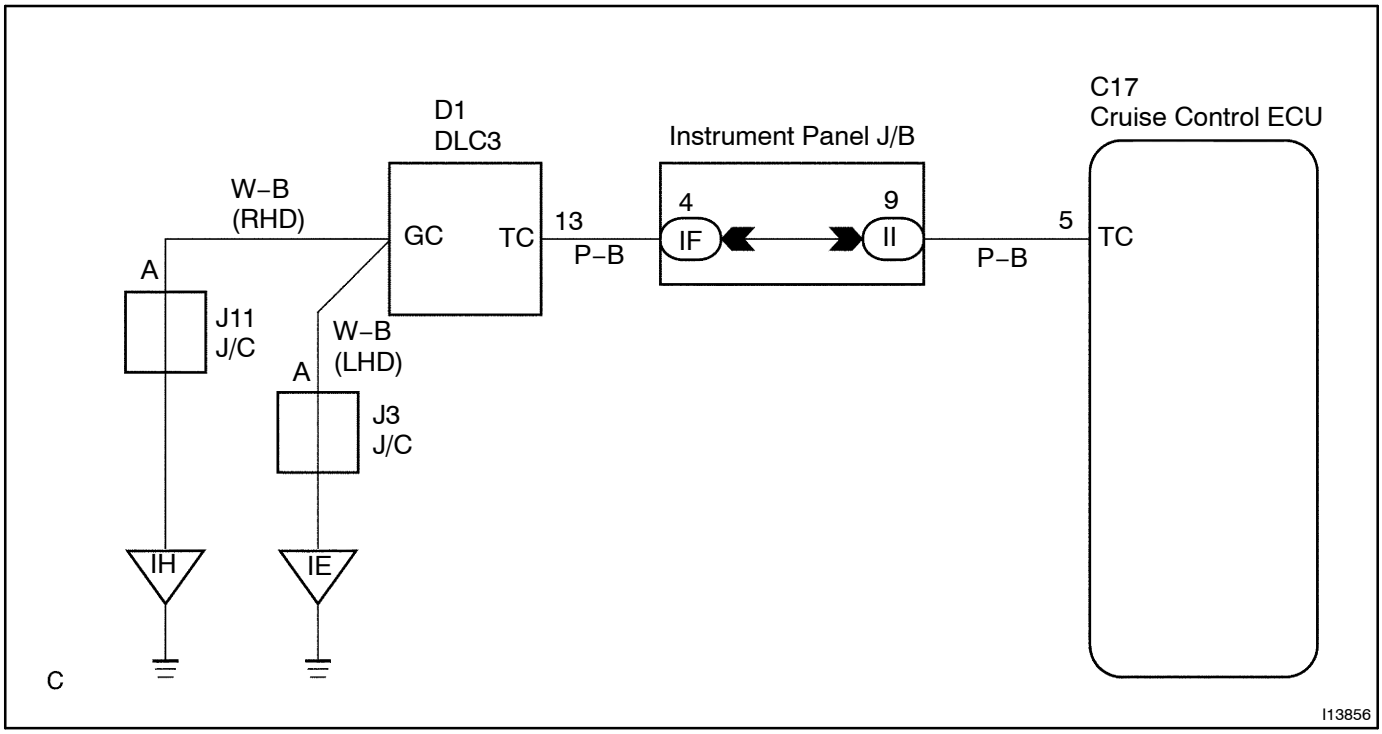

INSPECTION PROCEDURE

1	Check voltage between terminals Tc and E_1 of DLC3.

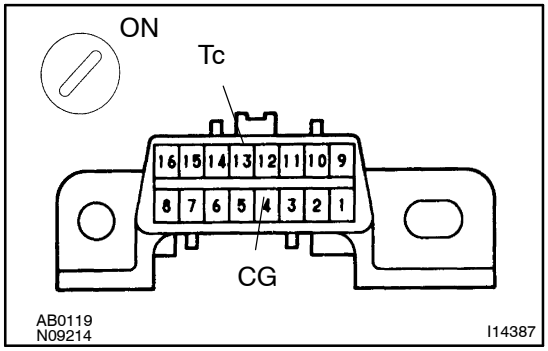

PREPARATION:
Turn ignition switch ON.
CHECK:
Measure voltage between terminals Tc and E_1 of DLC3.
OK:
Voltage: 10 – 14 V

OK → **Proceed to next circuit inspection shown in problem symptom table (See page DI–286).**

NG

2	Check harness and connector between cruise control ECU and DLC3, DLC3 and body ground (See page IN–30).

NG → **Repair or replace harness or connector.**

OK

Check and replace cruise control ECU (See page IN–30).