DI6TJ–01

DTC	B2796/99	No Communication in Immobiliser system

CIRCUIT DESCRIPTION

This code is stored in memory when inserting the key that does not have a transponder chip or if communication between the key and Engine and ECT ECU is impossible.

DTC No.	DTC Detecting Condition	Trouble Area
B2796/99	No communication	• Key • Transponder Key Coil • Transponder Key Amplifier • Wire harness • Engine and ECT ECU

WIRING DIAGRAM

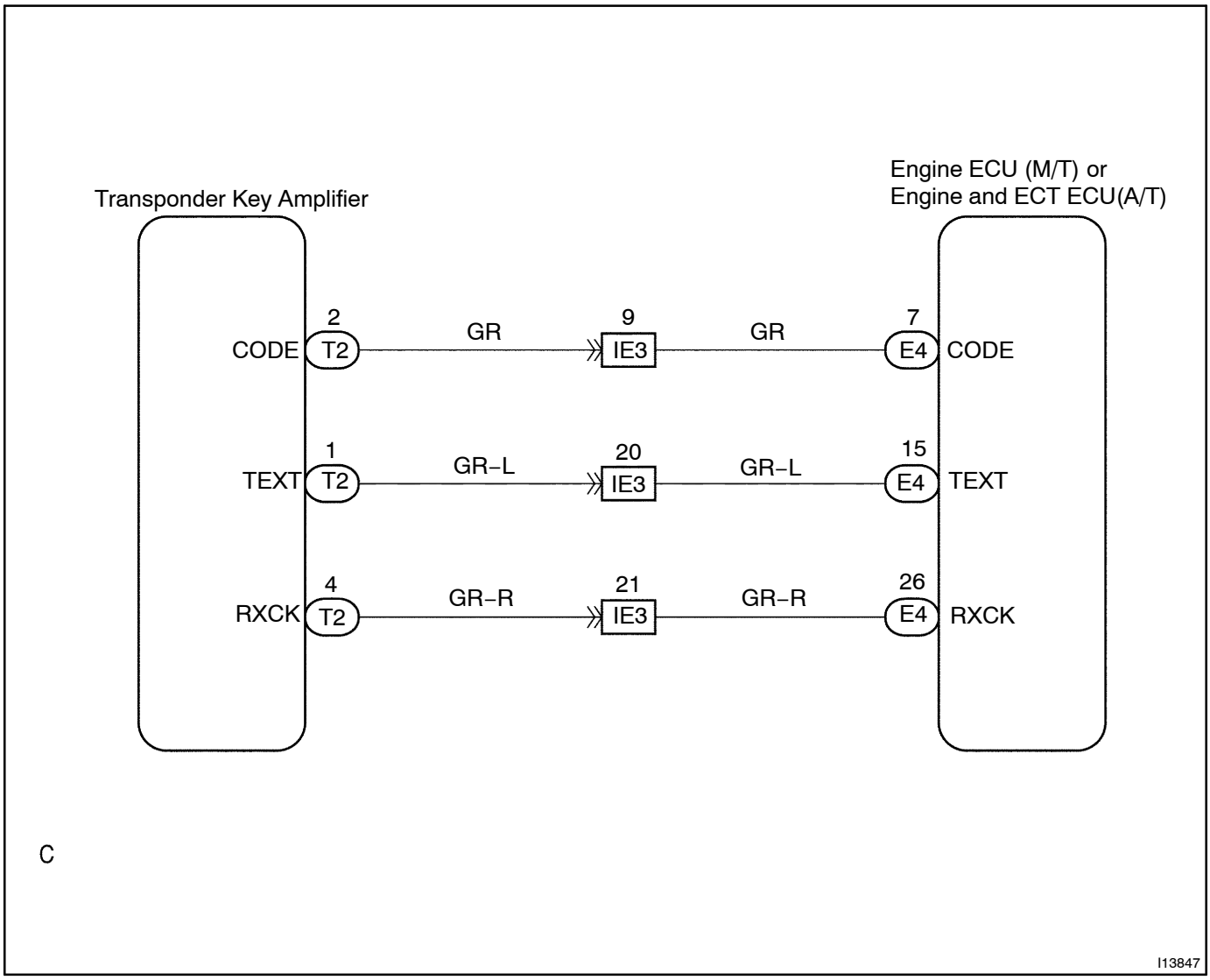

INSPECTION PROCEDURE

1	**Delete DTC and insert all the presently available keys to check whether the engine starts or not.**

RESULT:

A	All keys start the engine.
B	A specific key does not start the engine. In this case, DTC (B2796) is stored in memory.
C	All keys do not start the engine. In this case, DTC (B2796) is stored in memory.

A → **No problem at this time.**

HINT:
If the result is "A", please confirm whether or not customers have ever inserted the key (without transponder chip) of other vehicle in the ignition key cylinder, and find out the cause of detecting DTC.

B → **The transponder chip of a specific key is defective. Replace the key.**

C

2	**Check transponder key coil (See page DI–344).**

NG → **Replace transponder key coil.**

OK

3	**Check harness and connector between transponder key amplifier and Engine and ECT ECU (See page IN–30).**

NG → **Repair or replace harness and connector.**

OK

4	Does it operate normally after replacement of transponder key amplifier?

Yes → **Replace transponder key amplifier.**

No → **Replace Engine and ECT ECU.**