DI6TL–01

Power source circuit

CIRCUIT DESCRIPTION

This circuit provides power to operate the Transponder Key Amplifier

WIRING DIAGRAM

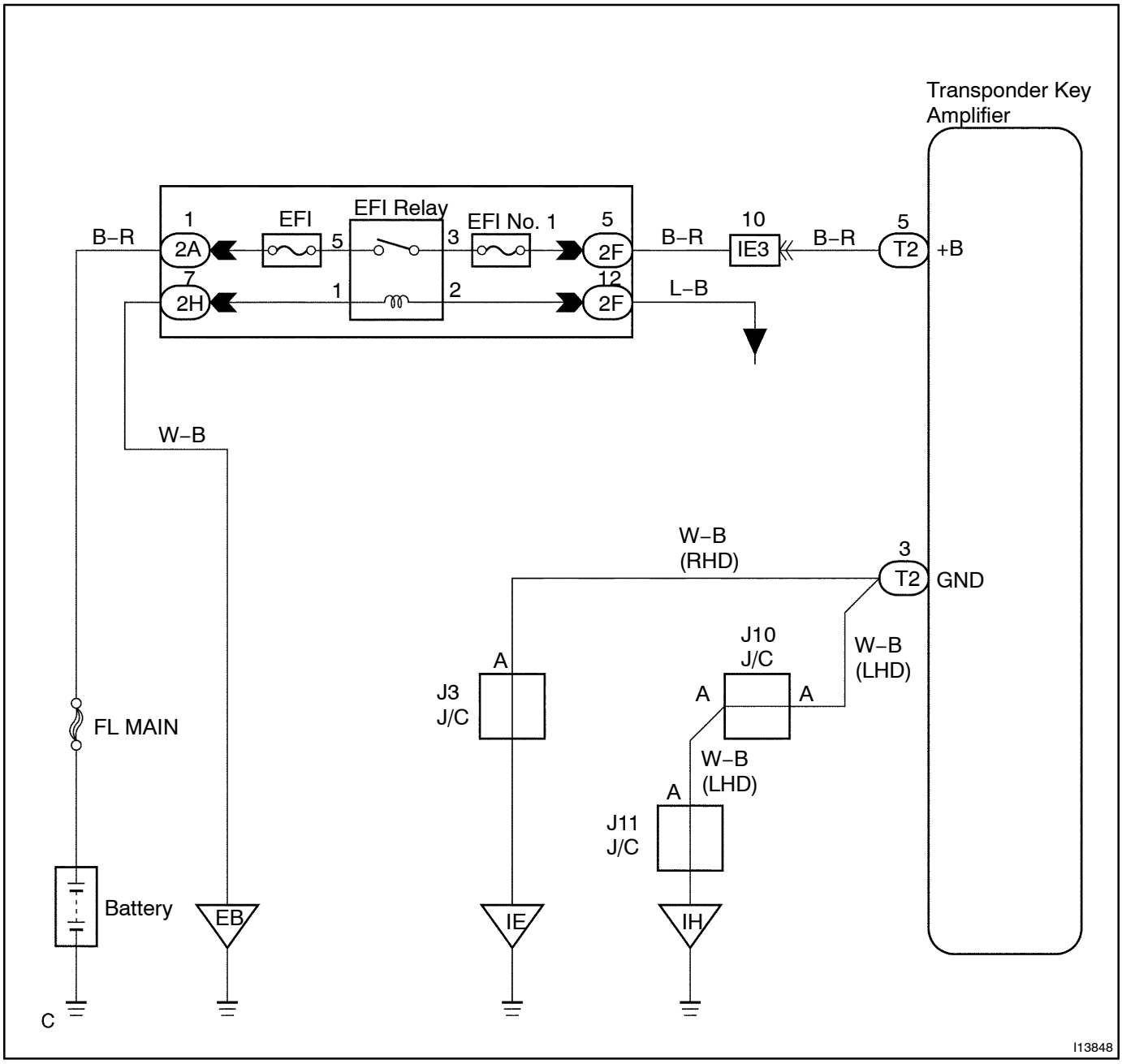

INSPECTION PROCEDURE

1	**Check EFI fuse.**

CHECK:
Check continuity of EFI fuse.
OK:
Continuity

NG → **Replace the failure fuse.**

OK

2	**Check voltage between terminals EFI and GND of Transponder Key Amplifier connector.**

PREPARATION:
(a) Turn ignition switch OFF.
(b) Disconnect the Transponder Key Amplifier connector.
CHECK:
Measure voltage between terminals +B and GND.
OK:
Voltage: 10 – 14 V

OK → **Proceed to next circuit inspection shown in problem symptoms table (See page DI–335).**

NG

3	**Check wireharness and connector between Transponder Key Amplifier and body ground (See page IN–30).**

NG → **Repair or replace wireharness or connector.**

OK

Check and repair wirehareness and connector between Transponder Key Amplifier and Battery.