DI6QW–02

CIRCUIT INSPECTION

Power source circuit

CIRCUIT DESCRIPTION

This circuit provides power to operate the Body ECU.

WIRING DIAGRAM

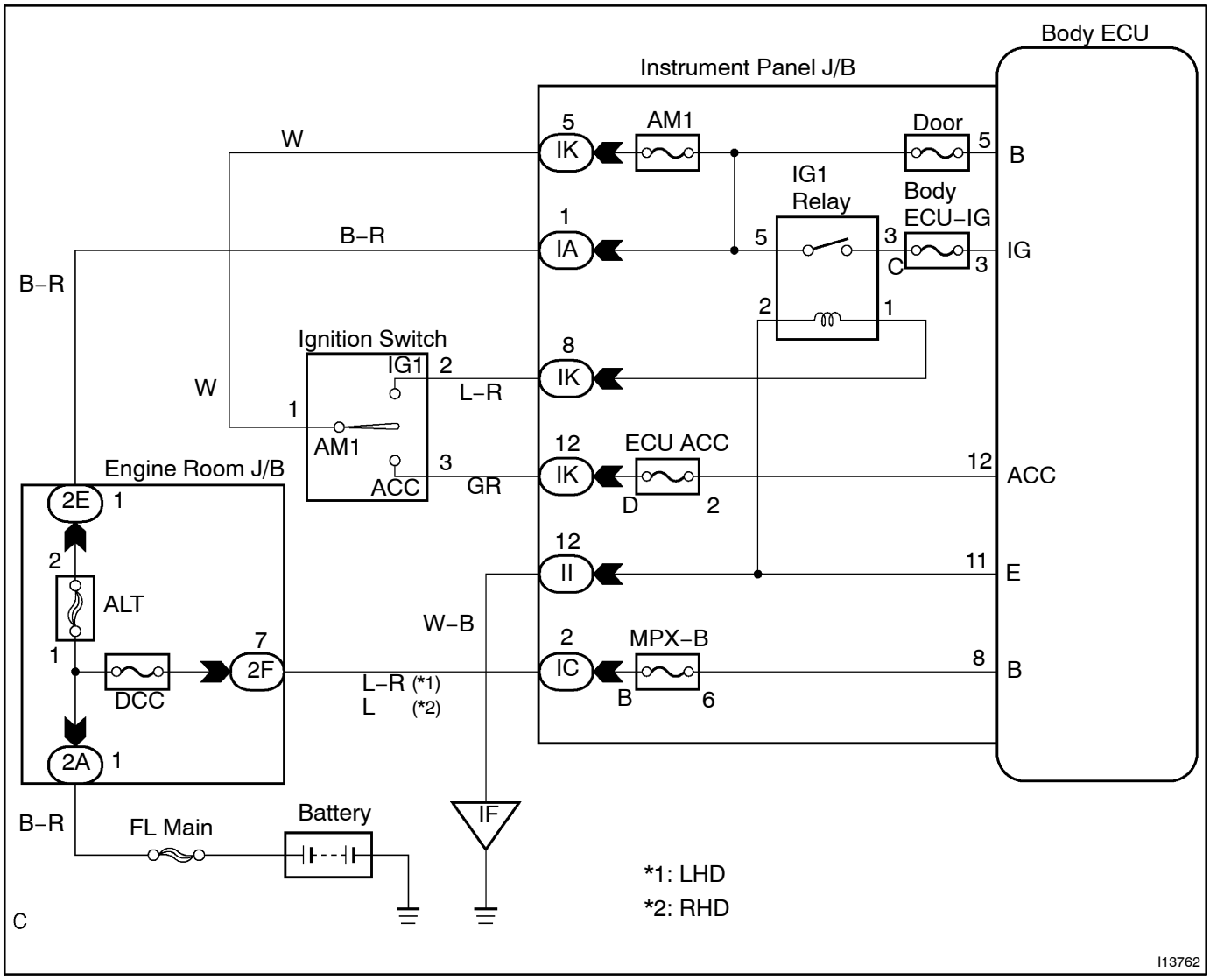

INSPECTION PROCEDURE

1	Check MPX–B, DCC, AM1 and DOOR fuse.

CHECK:
Check continuity of MPX–B, DCC, AM1 and DOOR fuse.
OK:
Continuity

NG → **Replace the failure fuse.**

OK

2	Check voltage between terminals B, B and E of Body ECU connector.

PREPARATION:
(a) Turn ignition switch OFF.
(b) Disconnect the Body ECU connector.
CHECK:
Measure voltage between terminals B, B and E.
OK:
Voltage: 10 – 14V

OK → **Proceed to next circuit inspection shown on problem symptoms table. (See page DI–355)**

NG

3	Check wireharness and connector between Body ECU and body ground. (See page IN–30)

NG → **Repair or replace wireharness or connector.**

OK

Check and repair wireharness and connector between Body ECU and battery.