DI6UA–01

Double lock motor circuit (Europe RHD)

WIRING DIAGRAM

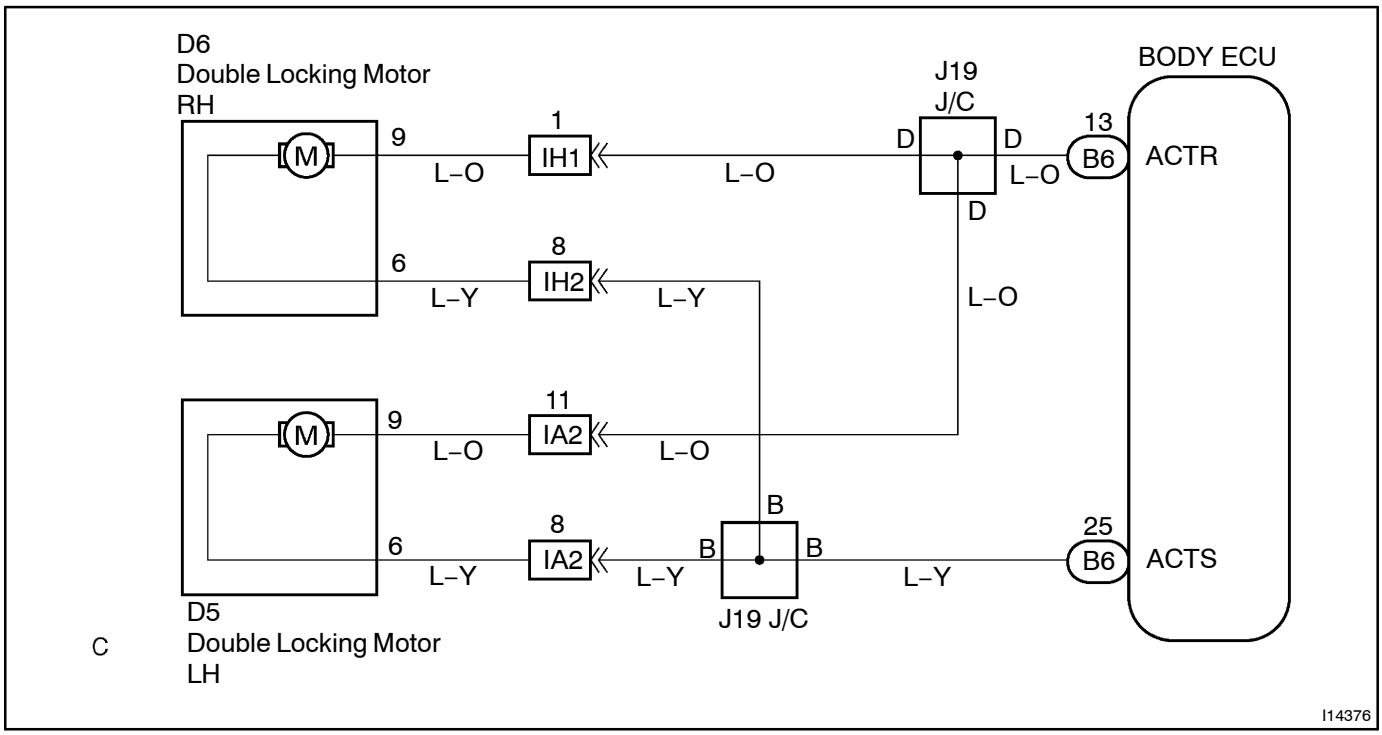

INSPECTION PROCEDURE

1	Check double lock motor (See page BE–82).

NG → Replace the double lock motor.

OK

2	Check wireharness and connector between double lock motor and body ECU (See page DI–367).

NG → Repair or replace wireharness or connector.

OK

Proceed to next circuit inspection shown on problem symptoms table (See page DI–355).