D16R9–02

Wireless door lock tuner circuit

CIRCUIT DESCRIPTION

The signal from the transmitter will be input to the body ECU through RDA line. RDA line is diagnosed by the Body ECU, so check DTC also in case of the failure of the wireless function.

WIRING DIAGRAM

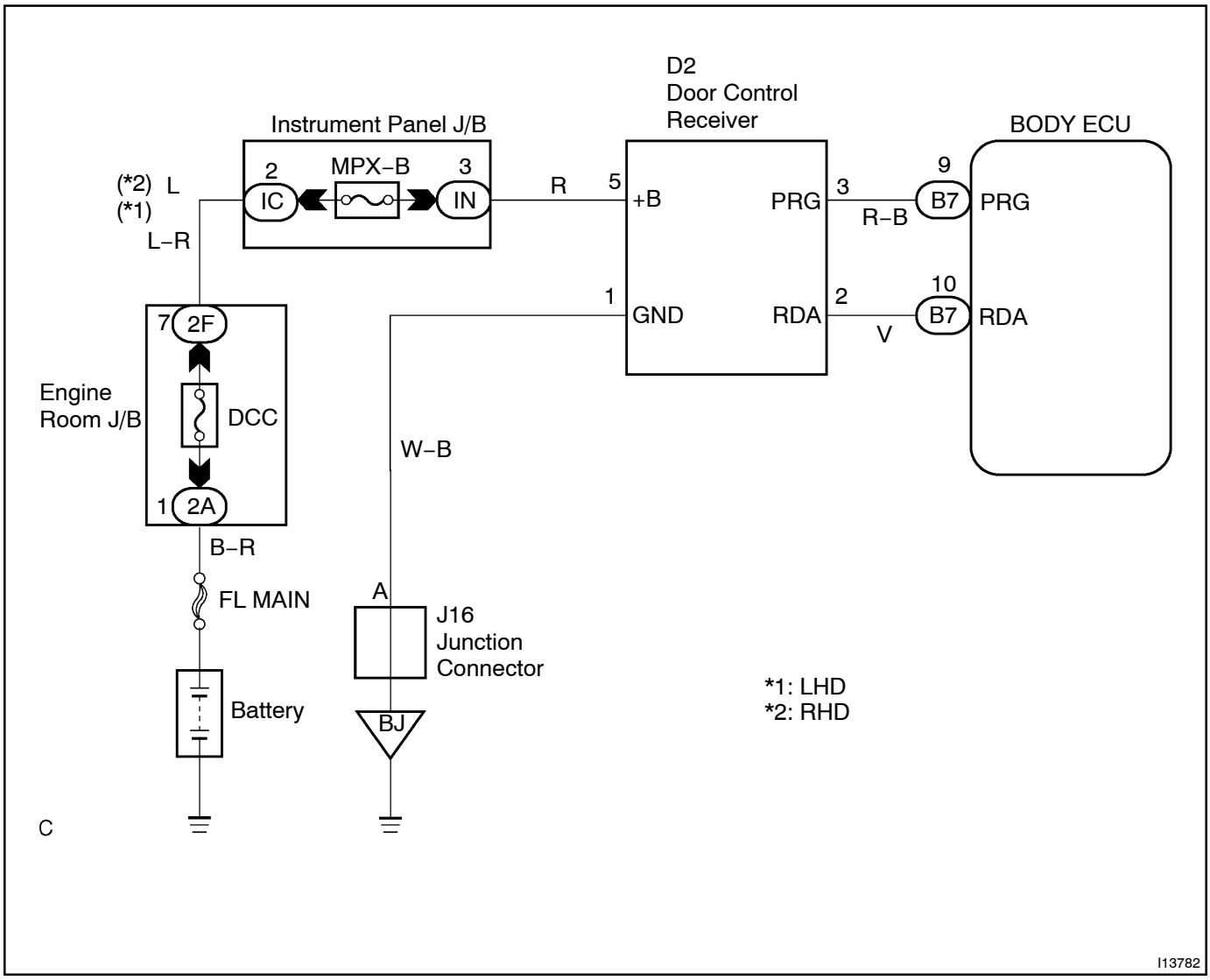

INSPECTION PROCEDURE

1	**Check wireharness.**

PREPARATION:
Disconnect connectors of wireless door lock tuner and Body ECU.
CHECK:
Check continuity between terminals PRG of wireless door lock tuner and PRG of Body ECU.
OK:
Continuity

NG → **Repair or replace wireharness.**

OK

2	**Check the wireless door lock tuner.**

CHECK:
Replace the wireless door lock tuner and check if it recovers normally.
OK:
Must be recovered normally.

NG → **Proceed to next circuit inspection shown on problem symptoms table (See page DI–355).**

OK

Failure of the original wireless door lock tuner.