DI6RA–02

Rear defogger relay circuit

WIRING DIAGRAM

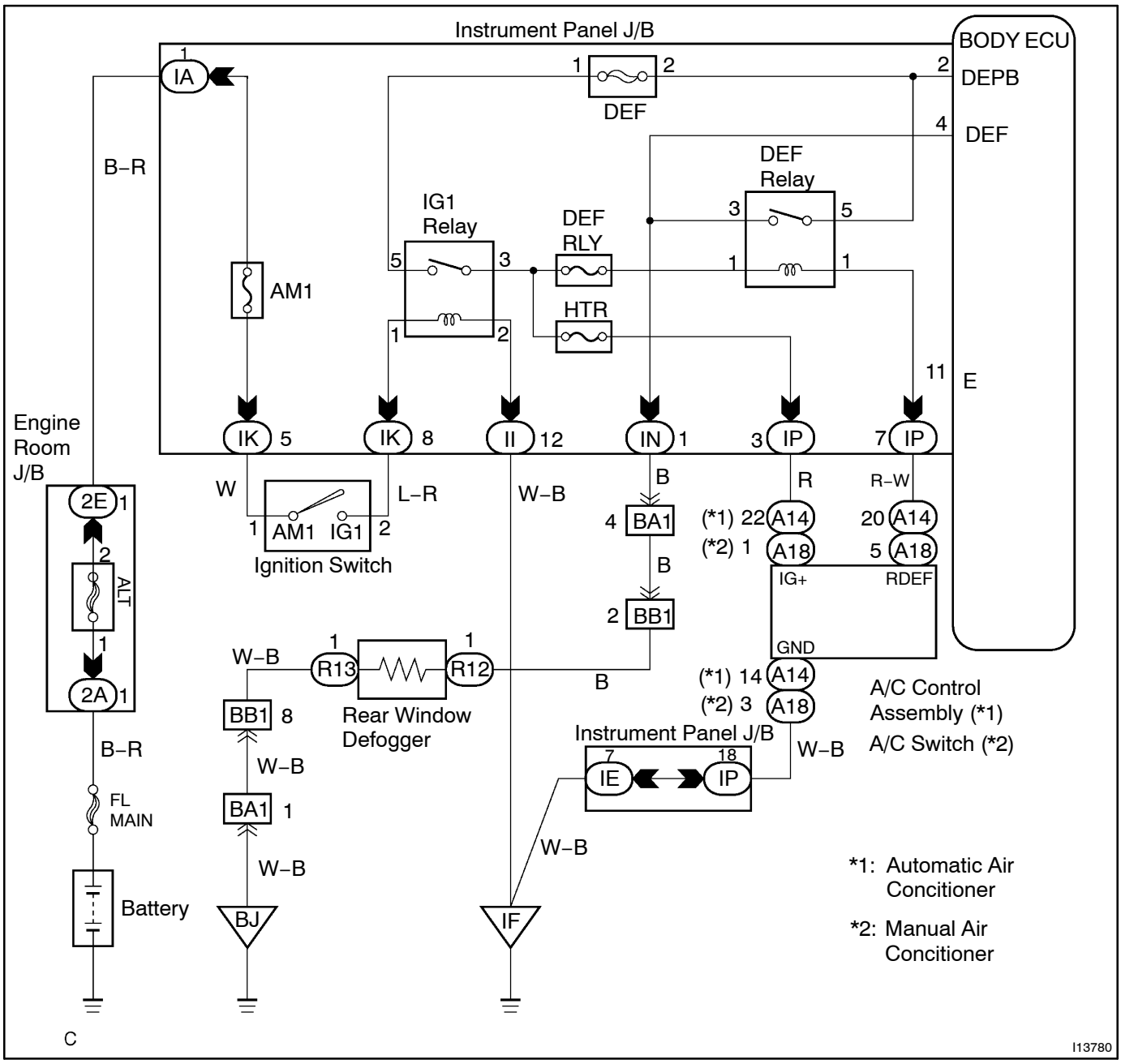

INSPECTION PROCEDURE

1	Check rear defogger relay (See page BE–59).

NG → Replace the rear defogger relay.

OK

2	Check wireharness and connector between rear defogger relay and body ECU, front defogger relay and body ECU. (See page IN–30)

NG → Repair or replace wireharness or connector.

OK

Proceed to next circuit inspection shown on problem symptoms table (See page DI–355).