DI6RC–02

Multiplex communication circuit

CIRCUIT DESCRIPTION

Signals are transmitted between the ECM and combination meter through the communication circuit.

WIRING DIAGRAM

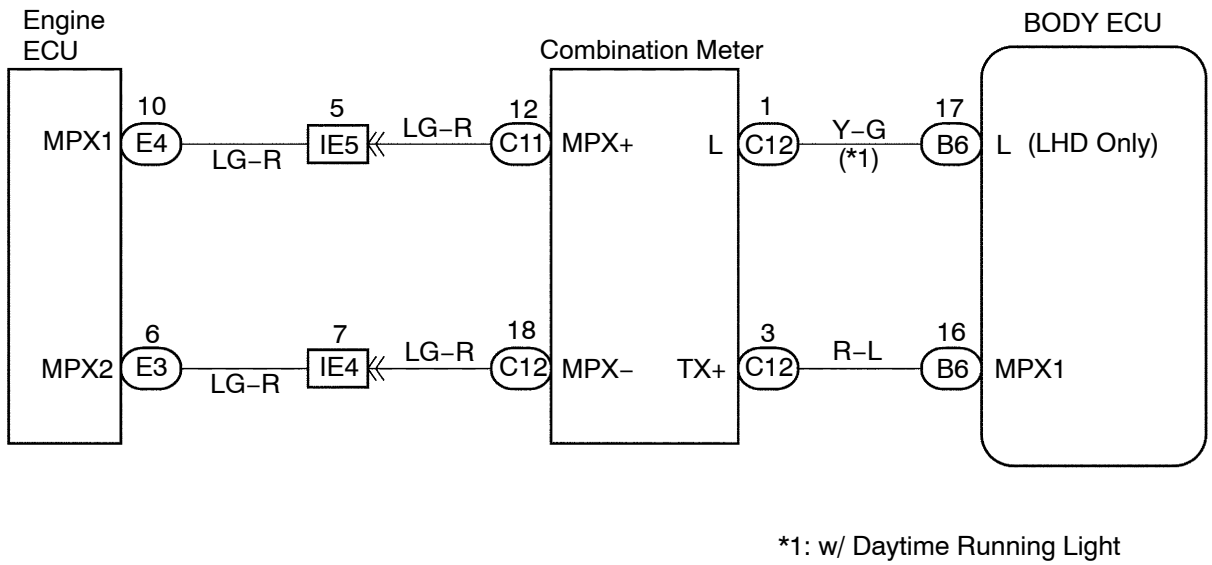

*1: w/ Daytime Running Light

C

I13750

INSPECTION PROCEDURE

1	Check engine and ECT ECU.

NG → Replace the engine and ECT ECU.

OK

2	Check combination meter (See page BE–52).

NG → Replace the combination meter.

OK

3	Check wireharness and connector between combination meter and body ECU, engine and ECT ECU and combination meter (See page IN–30).

NG → Repair or replace wireharness or connector.

OK

Replace the body ECU.