DI6S3–01

DTC	B1412/12	Ambient Temperature Sensor Circuit

CIRCUIT DESCRIPTION

This sensor detects the ambient temperature and sends the appropriate signals to the A/C control assembly.

DTC No.	Detection Item	Trouble Area
12	Open or short in ambient temperature sensor circuit.	• Ambient temperature sensor. • Harness or connector between ambient temperature sensor and A/C control assembly. • A/C control assembly.

WIRING DIAGRAM

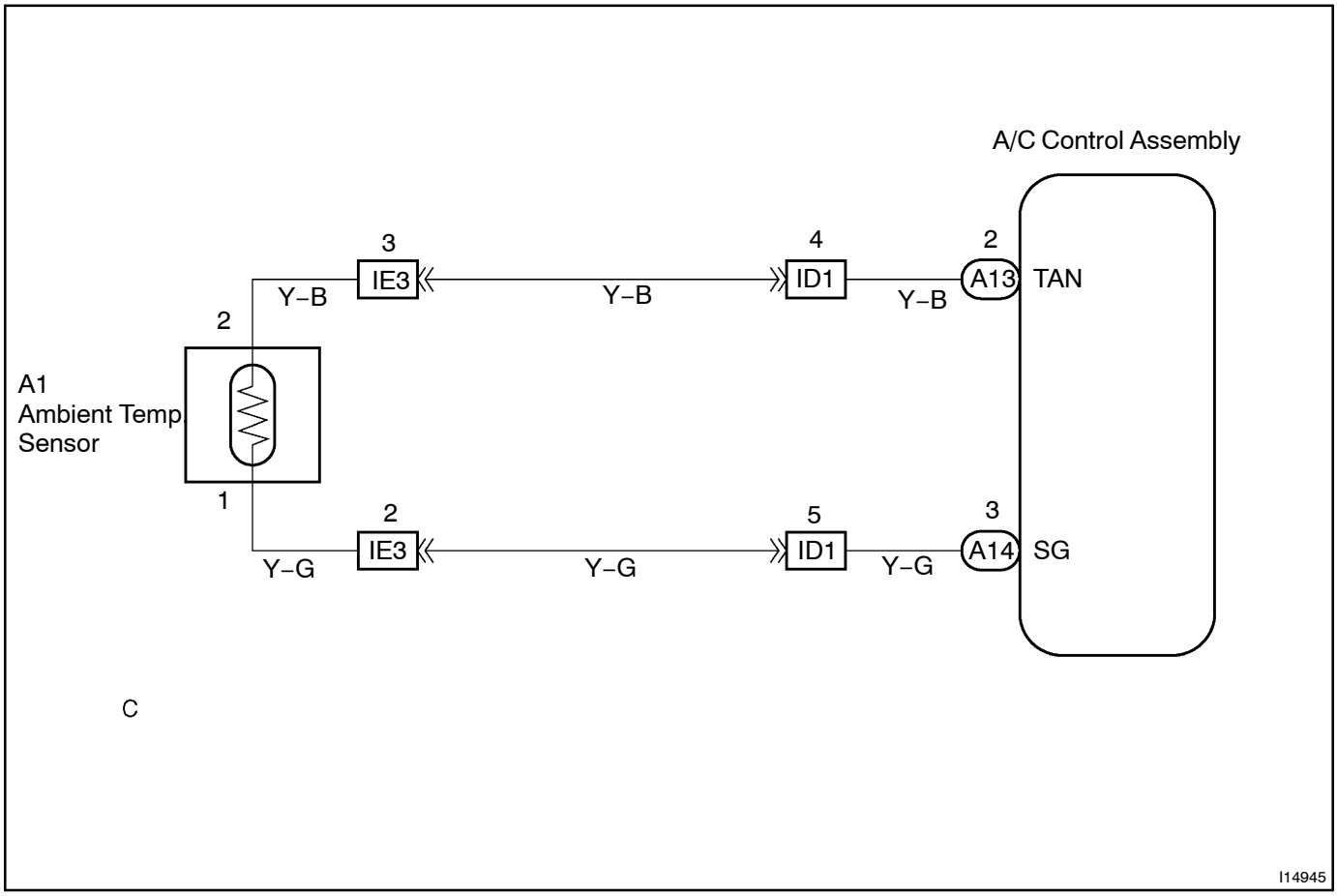

INSPECTION PROCEDURE

1	**Check voltage between terminals TAM and SG of A/C control assembly connector.**

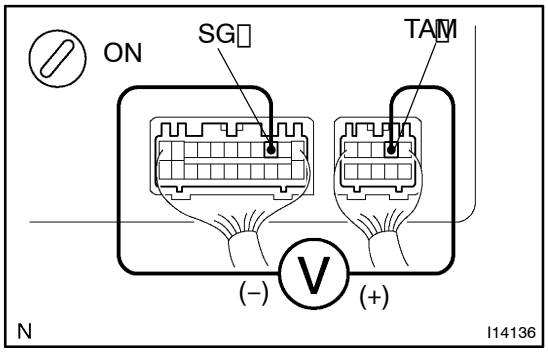

PREPARATION:

(a) Remove A/C control assembly with connectors still connected.

(b) Turn ignition switch ON.

CHECK:

Check voltage between terminals TAM and SG of A/C control assembly connector at each temperature.

OK:

Voltage

at 25 °C (77 °F) : 1.35 – 1.75 V

at 40 °C (104 °F) : 0.85 – 1.25 V

HINT:

As the temperature increases, the voltage decreases.

NG → **Go to step 2.**

OK

Proceed to the next circuit inspection shown on problem symptoms table (See page DI–432). However, if DTC 12 is displayed, check and replace A/C control assembly.

2	**Check ambient temperature sensor.**

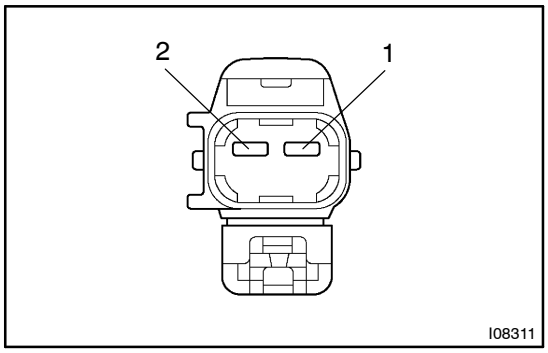

PREPARATION:

Disconnect ambient temperature sensor connector.

CHECK:

Check resistance between terminals 1 and 2 of ambient temperature sensor connector at each temperature.

OK:

Resistance

at 25 °C (77 °F) : 1.6 – 1.8 kΩ

at 40 °C (104 °F) : 0.5 – 0.7 kΩ

HINT:

As the temperature increases, the resistance decreases.

NG → **Replace ambient temperature sensor.**

OK

3	**Check harness and connector between A/C control assembly and ambient temperature sensor (See page IN–20).**

NG → **Repair or replace harness or connector.**

OK

Check and replace A/C control assembly.