DI6S6–01

| DTC | 21 | Solar Sensor Circuit |
|---|---|---|

## CIRCUIT DESCRIPTION

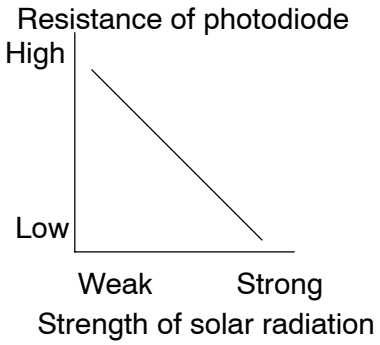


A photo diode in the solar sensor detects solar radiation and sends signals to the A/C control assembly.

| DTC No. | Detection Item | Trouble Area |
|---|---|---|
| 21 | Open or short in solar sensor circuit.<br>(Please note that display of DTC 21 is not abnormal when the sensor is not receiving solar radiation.) | • Solar sensor<br>• Harness or connector between solar sensor and A/C control assembly.<br>• A/C control assembly. |

## WIRING DIAGRAM

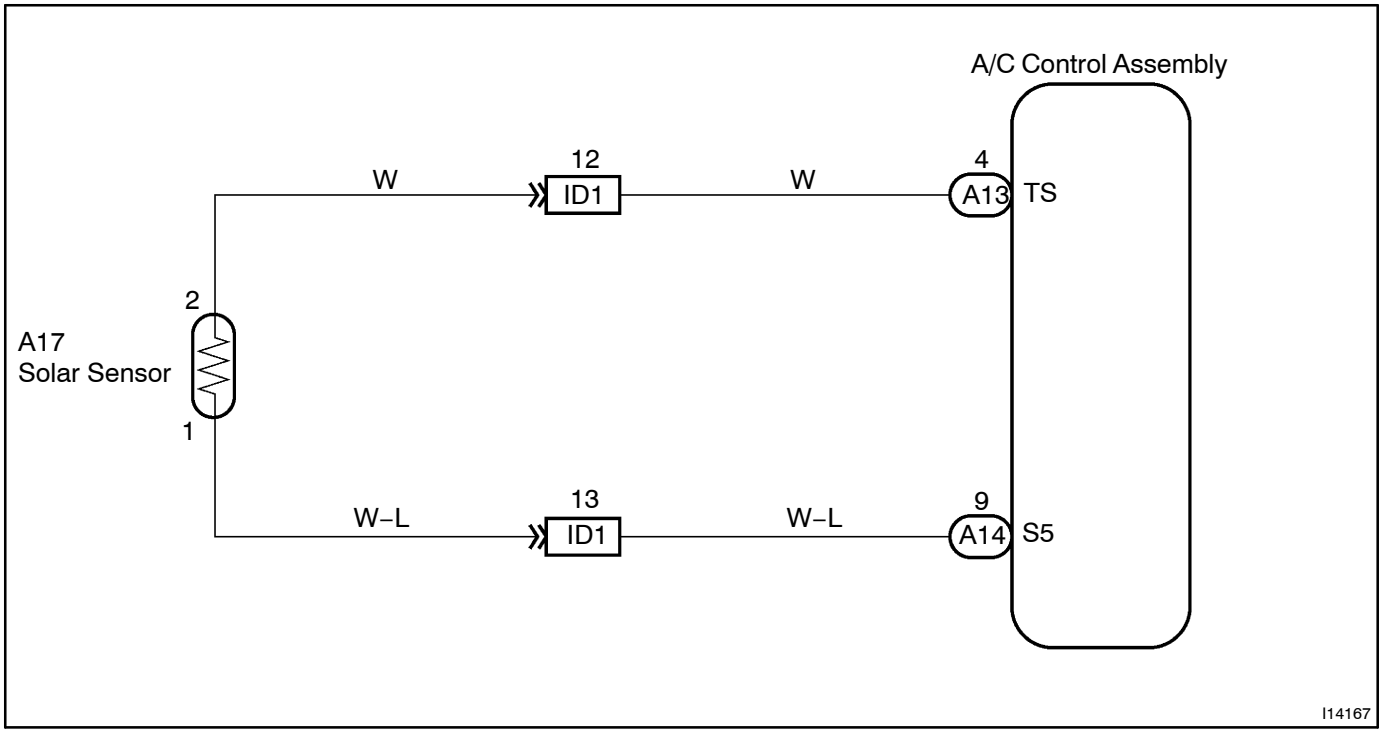

# INSPECTION PROCEDURE

| 1 | Check voltage between terminals S5 and TS of A/C control assembly connector. |
|---|---|

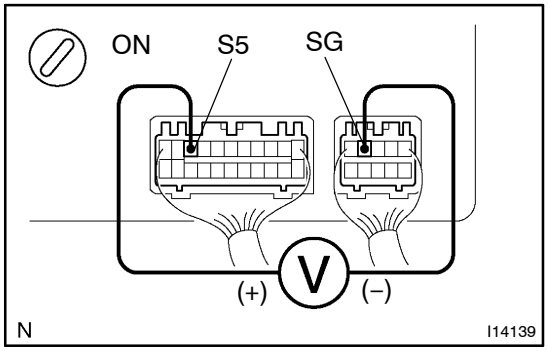


**PREPARATION:**

(a) Remove A/C control assembly with connectors still connected.

(b) Turn ignition switch ON.

**CHECK:**

Measure voltage between terminals S5 and TS of A/C control assembly connector when the solar sensor is subjected to an electric light, and when the sensor is covered by a cloth.

**OK:**

| Condition | Voltage |
|---|---|
| Sensor subjected to electric light | Below 4.0 V |
| Sensor covered by a cloth | 4.0 – 4.5 V |

HINT:

As the inspection light is gradually moved away from the sensor, the voltage increases.

**NG** → **Go to step 2.**

**NG**

**Proceed to next circuit inspection shown on problem symptoms table (See page DI–432). However, if DTC B1421/21 is displayed, check and replace A/C control assembly.**

| 2 | **Check solar sensor.** |
|---|---|

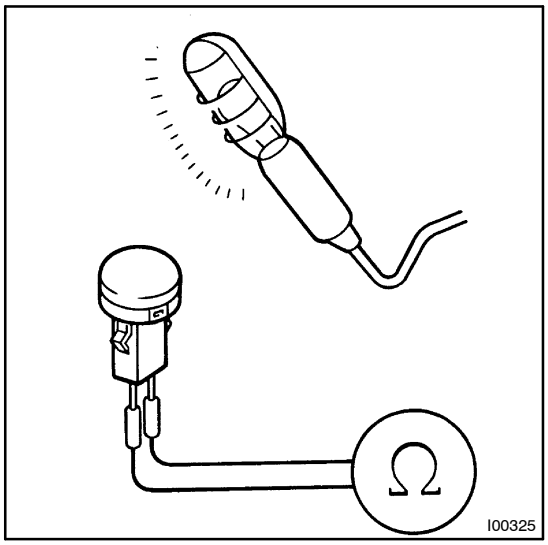


**PREPARATION:**

Remove solar sensor (See page AC–57).

**CHECK:**

(a) Cover the sensor by a cloth.

(b) Measure resistance between terminals 1 and 2 of solar sensor connector.

HINT:

Connect positive (+) lead of ohmmeter to terminal 2 and negative (–) lead to terminal 1 of the solar sensor.

**OK:**

**Resistance: ∞ Ω (No continuity)**

**PREPARATION:**

Remove the cloth from the solar sensor and subject the sensor to electric light.

**CHECK:**

Measure resistance.

**OK:**

**Resistance: Below 10 kΩ (Continuity)**

HINT:

As the electric light is moved gradually away from the sensor, the resistance increases.

**NG** → **Replace solar sensor.**

**OK**

| 3 | **Check harness and connector between A/C control assembly and solar sensor (See page IN–20).** |
|---|---|

**NG** → **Repair or replace harness or connector.**

**OK**

**Check and replace A/C control assembly.**