DI1CI–04

Heater Main Relay Circuit

CIRCUIT DESCRIPTION

The heater main relay is switched on by signals from the A/C control assembly. It supplies power to the blower motor.

WIRING DIAGRAM

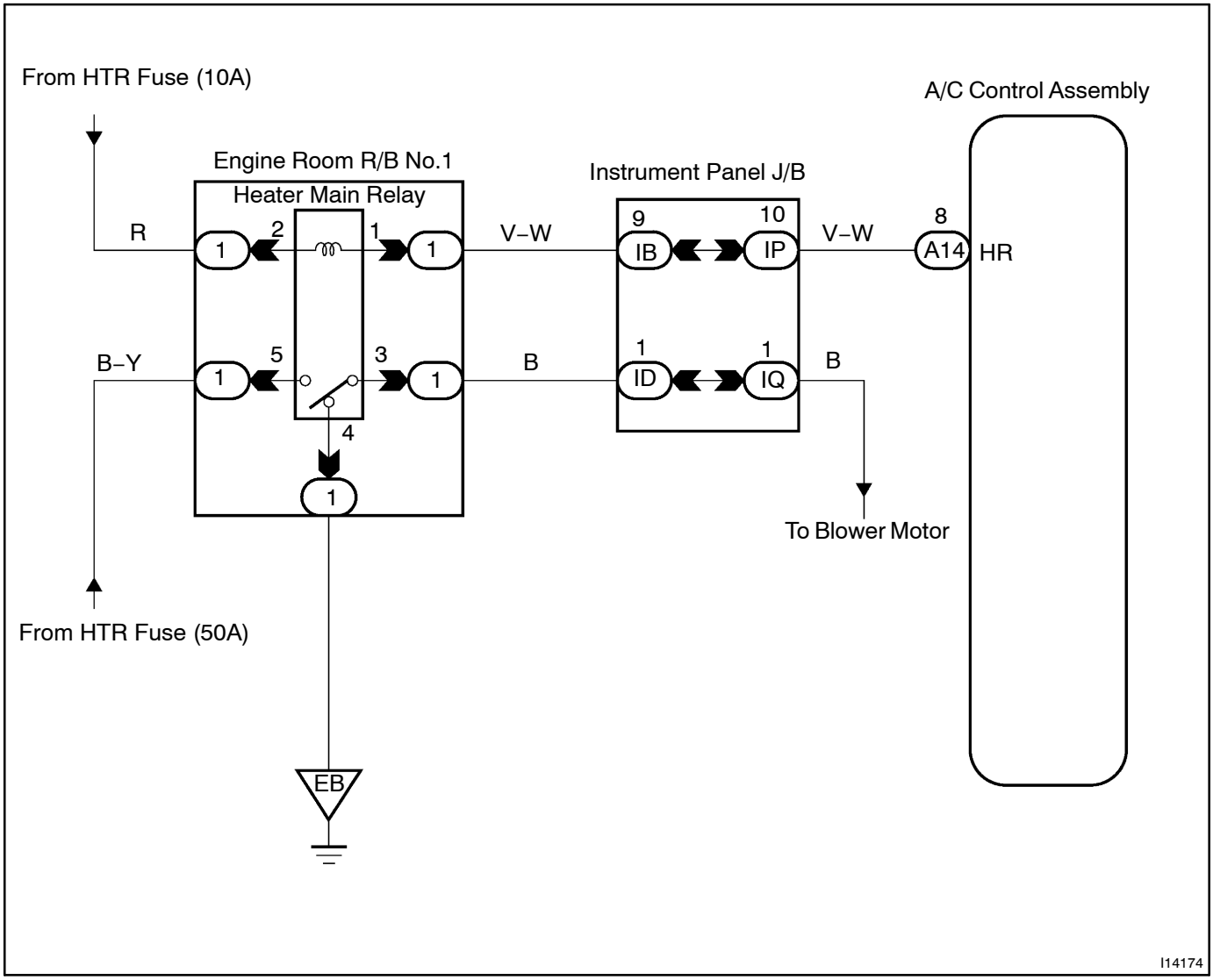

INSPECTION PROCEDURE

1	**Check voltage between terminal HR of A/C control assembly connector and body ground.**

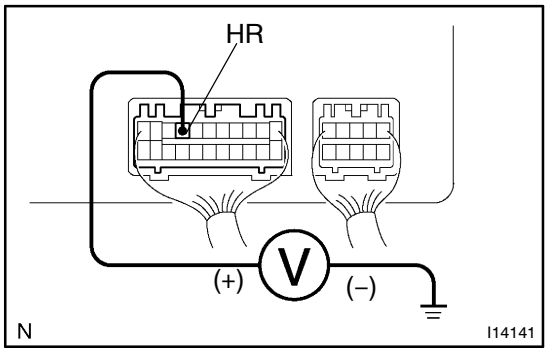

PREPARATION:

Remove A/C control assembly with connectors still connected.

CHECK:

Measure voltage between terminal HR of A/C control assembly and body ground when ignition switch is ON and OFF.

OK:

Ignition Switch	Voltage	
OFF	0 V	
ON	Blower ON	0 V
	Blower OFF	10 – 14 V

OK → **Proceed to next circuit inspection shown on problem symptoms table (See page DI–432).**

NG →

2	Check heater main relay.

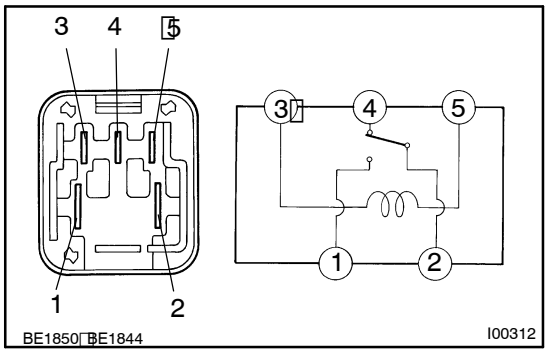

PREPARATION:
Remove heater main relay from.
CHECK:
Check continuity between each pair of terminals of heater main relay shown below.
OK:

Tester connection	Specified condition
1 – 4	No continuity
2 – 4	Continuity
3 – 5	62.5 – 90.9 Ω

PREPARATION:
Apply battery positive voltage between terminals 3 and 5.
CHECK:
Check continuity between each pair of terminal shown below.
OK:

Tester connection	Specified condition
1 – 2	Continuity
2 – 4	No continuity

NG → **Replace hater main relay.**

OK

3	Check HTR fuse

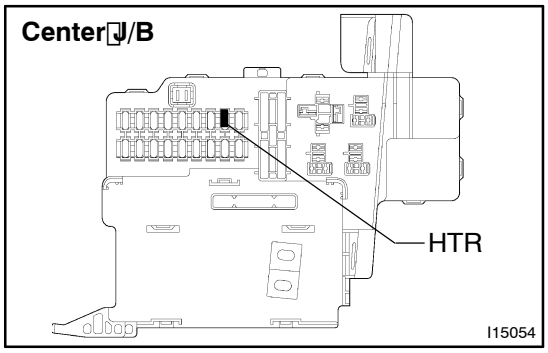

PREPARATION:
Remove HTR fuse from center J/B.
CHECK:
Check continuity of HTR fuse.
OK:
Continuity exists.

NG → **Check for short in all the harness and components connected to the HTR fuse (See page DI–475).**

OK

Check and repair harness and connector between A/C control assembly and battery.