DI1CJ–04

Blower Motor Circuit

CIRCUIT DESCRIPTION

This is the power source for the blower motor.

WIRING DIAGRAM

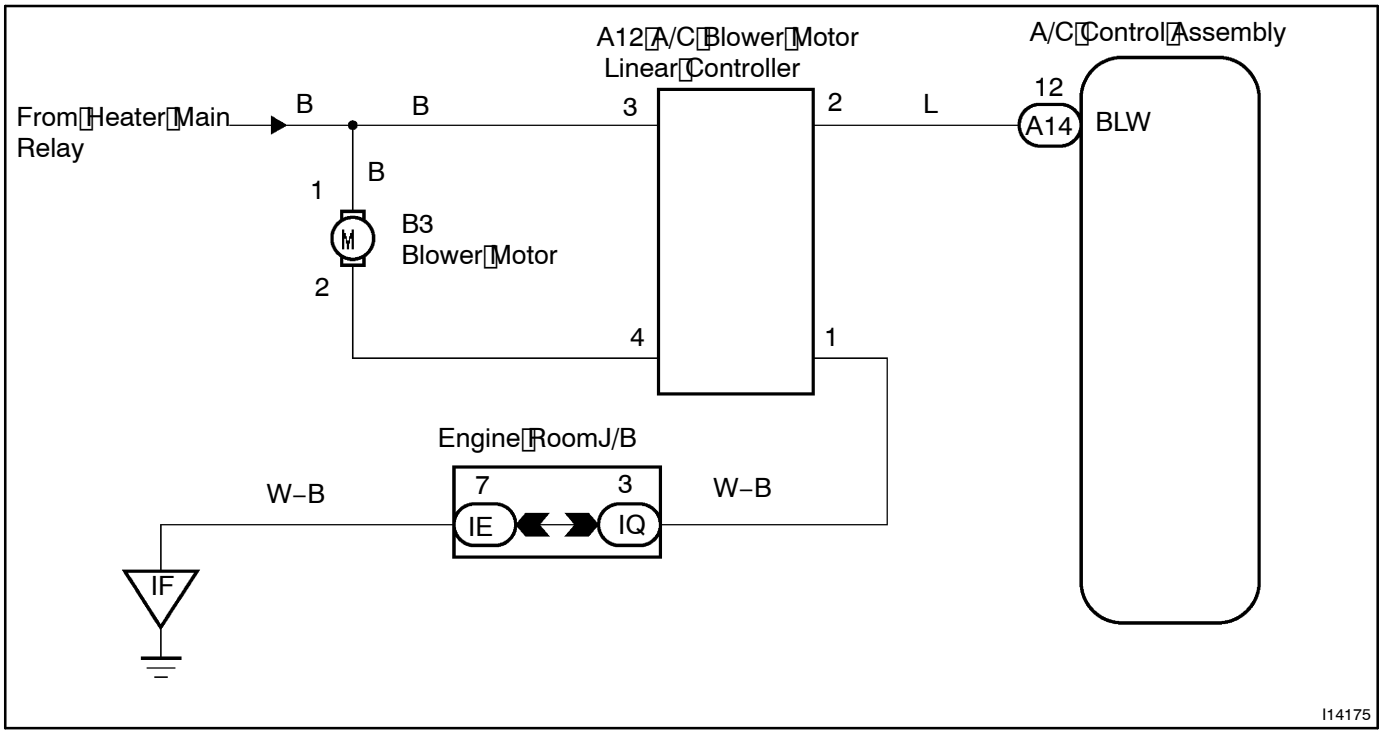

INSPECTION PROCEDURE

1	**Check blower motor.**

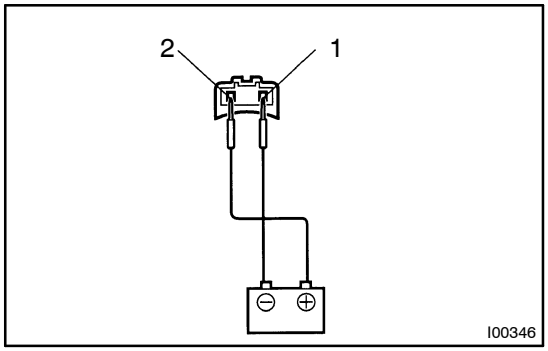

PREPARATION:

Remove blower motor (See page AC–51).

CHECK:

Connect positive (+) lead connected to terminal 2 of blower motor connector, negative (–) lead to terminal 1.

OK:

Blower motor operates smoothly.

NG → **Replace blower motor.**

OK

2	Check harness and connector between battery and blower motor (See page IN–30).

NG → Repair or replace harness or connector.

OK

3	Check harness and connector between blower motor and blower motor linear controller, blower motor linear controller and body ground (See page IN–30).

NG → Repair or replace harness or connector.

OK

4	Check harness and connector between blower motor linear controller and A/C control assembly (See page IN–30).

NG → Repair or replace harness or connector.

OK

Check and replace A/C control assembly or blower motor linear controller (See page IN–30).