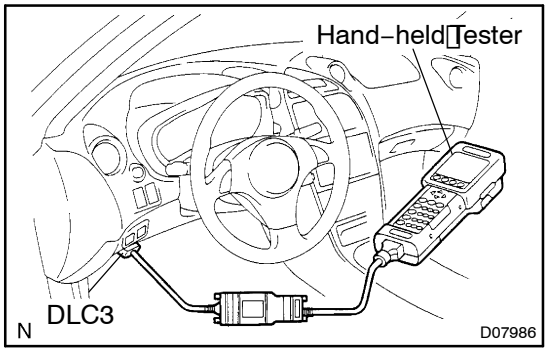

ABS & VSC ACTUATOR

BR1U9–01

ON–VEHICLE INSPECTION

1. IN CASE OF USING HAND–HELD TESTER:

(a) Connect the hand–held tester to the DLC3.

(b) Start the engine and run it at idle.

(c) Select the ACTIVE TEST mode on the hand–held tester.

HINT:

Please refer to the hand–held tester operator's manual for further details.

2. INSPECT ACTUATOR MOTOR OPERATION

(a) With the motor relay ON, check the actuator motor operation noise.

(b) Turn the motor relay OFF.

(c) Depress the brake pedal and hold it for about 15 seconds. Check that the brake pedal cannot be depressed.

(d) With the motor relay ON, check that the pedal does not pulsate.

NOTICE:

Do not keep motor relay ON for more than 5 seconds continuously. When operating it continuously, set the interval of more than 20 seconds.

(e) Turn the motor relay OFF and release the brake pedal.

3. INSPECT RIGHT FRONT WHEEL OPERATION

NOTICE:

Never turn ON the solenoid which is not described below.

(a) With the brake pedal depressed, perform the following operations.

(b) Turn the SFRH and SFRR solenoid ON simultaneously, and check that the pedal cannot be depressed.

NOTICE:

Do not keep solenoid ON for more than 10 seconds continuously. When operating it continuously, set the interval of more than 20 seconds.

(c) Turn the SFRH and SFRR solenoid OFF simultaneously, and check that the pedal can be depressed.

(d) Turn the motor relay ON, and check that the pedal returns.

NOTICE:

Do not keep motor relay ON for more than 5 seconds continuously. When operating it continuously, set the interval of more than 20 seconds.

(e) Turn the motor relay OFF and release the brake pedal.

4. INSPECT OTHER WHEEL OPERATION

In the same procedure, check the solenoids of other wheels.

HINT:

Left front wheel: SFLH, SFLR

Right rear wheel: SRRH, SRRR

Left rear wheel: SRLH, SRLR

5. CLEAR DTC (See page DI–53)