DI6SL–05

CIRCUIT INSPECTION

DTC	C0200/31 to C1239/39	Speed Sensor Circuit

CIRCUIT DESCRIPTION

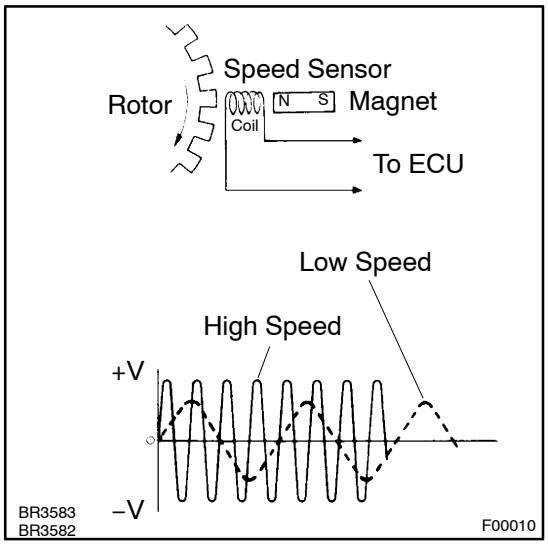

The speed sensor detects wheel speed and sends the appropriate signals to the ECU. These signals are used to control the ABS system. The front and the rear rotors each have 48 serrations.

When the rotors rotate, the magnetic field emitted by the permanent magnet in the speed sensor generates an AC voltage. Since the frequency of this AC voltage changes in direct proportion to the speed of the rotor, the frequency is used by the ECU to detect the speed of each wheel.

DTC No.	DTC Detecting Condition	Trouble Area
C0200/31 C0205/32	Detection of any of conditions from 1. through 3.: 1. Vehicle speed is at 10 km/h (6 mph) or more and the speed sensor signal circuit is open or short circuit continues for 15 sec. or more. 2. Momentary interruption of the speed sensor signal occurs 7 times or more. 3. Open circuit condition of the speed sensor signal circuit continues for 0.5 sec. or more.	• Right front or left front speed sensor • Each speed sensor circuit • Speed sensor rotor
C0210/33 C0215/34		• Right rear and left rear speed sensor • Each speed sensor circuit • Speed sensor rotor • Rear axle hub
C1235/35 C1236/36 C1238/38 C1239/39	Vehicle speed is at 20 km/h (12mph) or more and interference on the speed sensor signal continues for 5 sec. or more.	• Right front, left front, right rear or left rear speed sensor • Each speed sensor circuit • Speed sensor rotor

HINT:

- DTC No. C0200/31 and C1235/35 is for the right front speed sensor.
- DTC No. C0205/32 and C1236/36 is for the left front speed sensor.
- DTC No. C0210/33 and C1238/38 is for the right rear speed sensor.
- DTC No. C0215/34 and C1239/39 is for the left rear speed sensor.

WIRING DIAGRAM

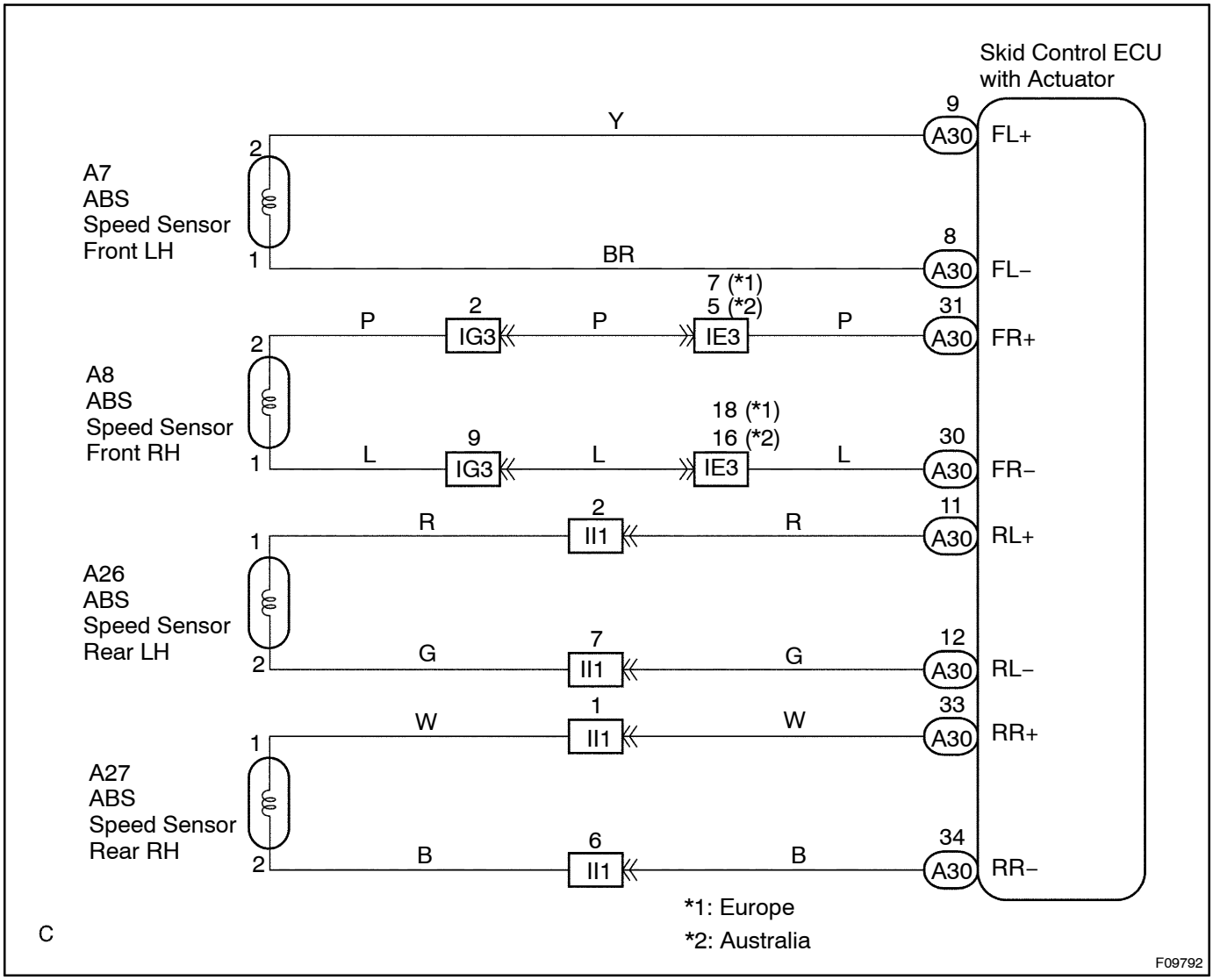

INSPECTION PROCEDURE

HINT:
Start the inspection from step 1 in the case of using the hand-held tester and start from step 2 in the case of not using the hand-held tester.

1	**Check output value of speed sensor.**

PREPARATION:
(a) Connect the hand-held tester to the DLC3.
(b) Turn the ignition switch to ON and push the hand-held tester main switch ON.
(c) Select the DATA LIST mode on the hand-held tester.

CHECK:
Check that there is no difference between the speed value output from the speed sensor displayed on the hand-held tester and the speed value displayed on the speedometer when driving the vehicle.

OK:
There is almost no difference between the two displayed speed values.

HINT:
There is tolerance of ± 10% in the speedometer indication.

OK → **Check and replace Skid Control ECU (ABS Actuator Assembly).** (See page IN-30)

NG

2	**Check speed sensor.**

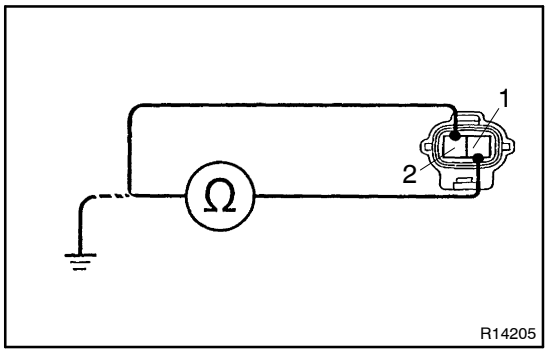

Front:

PREPARATION:
(a) Remove the front fender liner.
(b) Make sure that there is no looseness at the connector lock part and the connecting part of the connector.
(c) Disconnect the speed sensor connector.

CHECK:
Measure the resistance between terminal 1 and 2 of speed sensor connector.

OK:
Resistance: 1.4 – 1.8 kΩ at 20 °C

CHECK:
Measure the resistance between terminal 1 and 2 of speed sensor connector and body ground.

OK:
Resistance: 10 MΩ or higher

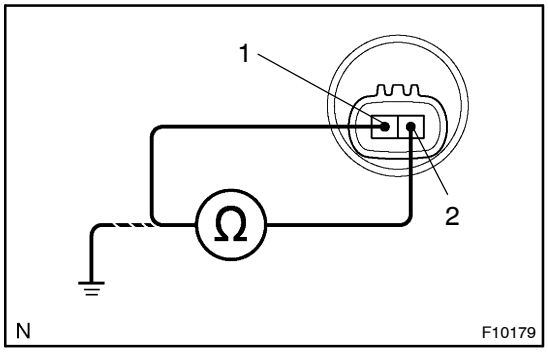

Rear speed sensor:

PREPARATION:

(a) Make sure that there is no looseness at the connector lock part and the connecting part of the connector.

(b) Disconnect the speed sensor connector at hub bearing.

CHECK:

Measure the resistance between terminal 1 and 2 of speed sensor connector.

OK:

Resistance: 2.2 kΩ or less

CHECK:

Measure the resistance between terminal 1 and 2 of speed sensor connector and body ground.

OK:

Resistance: 1 MΩ or higher

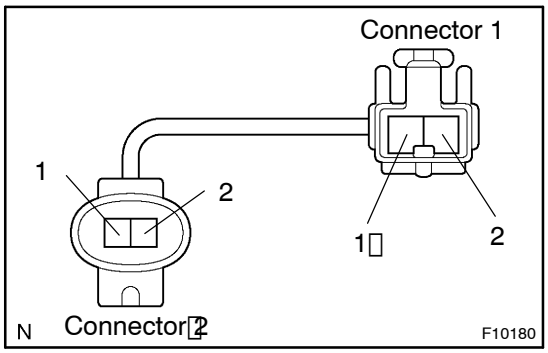

Rear speed sensor sub–wire harness:

PREPARATION:

(a) Remove the seat cushion and the seatback.

(b) Make sure that there is no looseness at the connector lock part and connecting part of the connector.

(c) Disconnect the speed sensor sub–wire harness connector inside vehicle.

CHECK:

(a) Measure the resistance between terminal 1 of connector 1 and terminal 2 of connector 2.

(b) Measure the resistance between terminal 2 of connector 1 and terminal 1 of connector 2.

OK:

Resistance: below 1 Ω

CHECK:

Measure the resistance between terminal 1 and 2 of speed sensor connector 1 and body ground.

OK:

Resistance: 10 MΩ or higher

NG → **Replace speed sensor or sub–wire harness.**

NOTICE:

Check the speed sensor signal last (See page DI–3).

OK

3	**Check for open and short circuit in harness and connector between each speed sensor and Skid Control ECU (See page IN-30).**

NG → **Repair or replace harness or connector.**

OK

4	**Check speed sensor installation.**

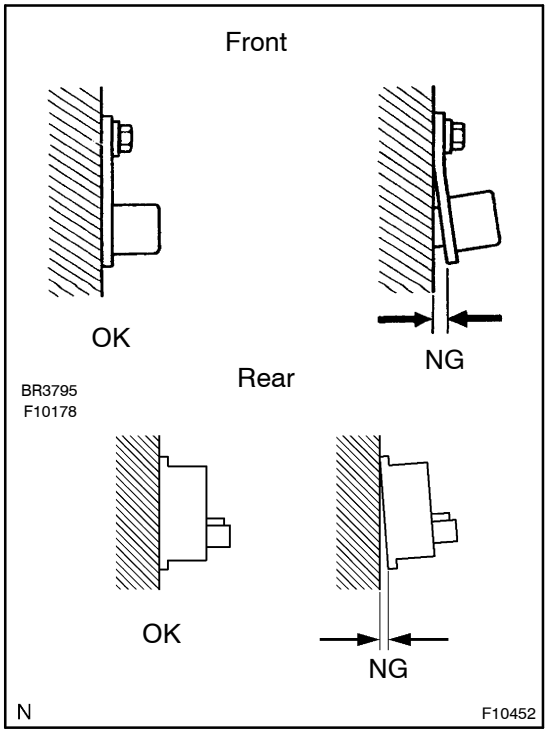

CHECK:

Check the speed sensor installation.

OK:

Front:

The installation bolt is tightened properly and there is no clearance between the sensor and the steering knuckle.

Torque: 8.0 N·m (82 kgf·cm, 71 in.·lbf)

Rear:

There is no clearance between the sensor and the rear axle carrier.

NG → **Replace speed sensor.**

NOTICE:

Check the speed sensor signal again at the end of the procedure (See page DI-3).

OK

5	**Check speed sensor and sensor rotor serrations.**

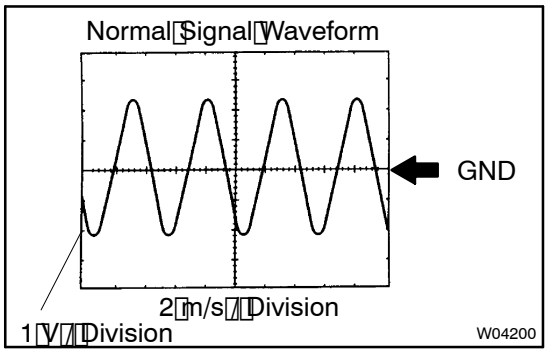

REFERENCE: INSPECTION USING OSCILLOSCOPE

PREPARATION:

(a) Disconnect the Skid Control ECU connector.

(b) Connect the oscilloscope to the terminal FR+ – FR–, FL+ – FL–, RR+ – RR– and RL+ – RL– of the Skid Control ECU harness side connector.

CHECK:

Drive the vehicle with about 30 km/h (19 mph), and check the signal waveform.

OK	**Check and replace Skid Control ECU (ABS Actuator Assembly). (See page IN–30)**

NG

6	**Check sensor rotor and sensor tip.**

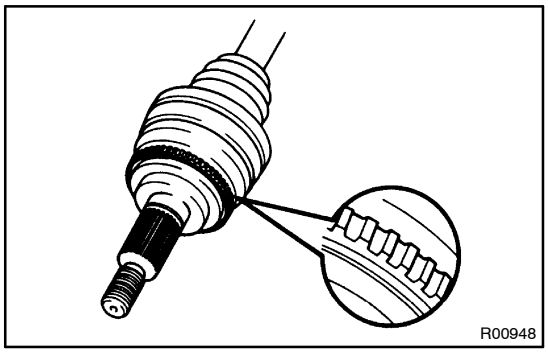

Front:

PREPARATION:

Remove the front drive shaft.

CHECK:

Check the sensor rotor serrations.

OK:

No scratches or missing teeth or foreign objects.

PREPARATION:

Remove the front speed sensor.

CHECK:

Check the sensor tip.

OK:

No scratches or foreign objects on the sensor tip.

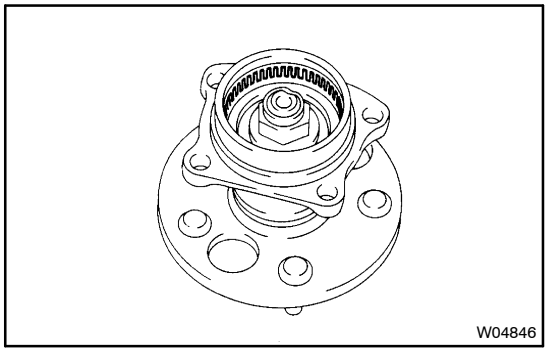

Rear:

PREPARATION:

Remove the rear speed sensor.

CHECK:

Check the sensor rotor serrations.

OK:

No scratches or missing teeth or foreign objects.

CHECK:

Check the sensor tip.

OK:

No scratches or foreign objects on the sensor tip.

NG → **Replace sensor rotor or speed sensor.**

NOTICE:

Check the speed sensor signal again at the end of the procedure (See page DI-3).

OK

Check and replace Skid Control ECU (ABS Actuator Assembly). (See page IN-30)