DI6SP–08

DTC	C1241/41	IG Power Source Circuit

CIRCUIT DESCRIPTION

This is the power source of ECU, hence of CPU, and of the ABS actuator.

DTC No.	DTC Detection Condition	Trouble Area
C1241/41	Condition 1. or 2. is detected: 1. Vehicle speed is at 3 km/h (1.9 mph) or more and ECU terminal IG1 voltage is 9.5 V or less, which continues for 10 sec. or more 2. When IG terminal voltage is less than 9.5 V, there is open circuit in the motor relay or in the solenoid relay, or the solenoid circuit malfunction.	• Battery • Charging system • Power source circuit

WIRING DIAGRAM

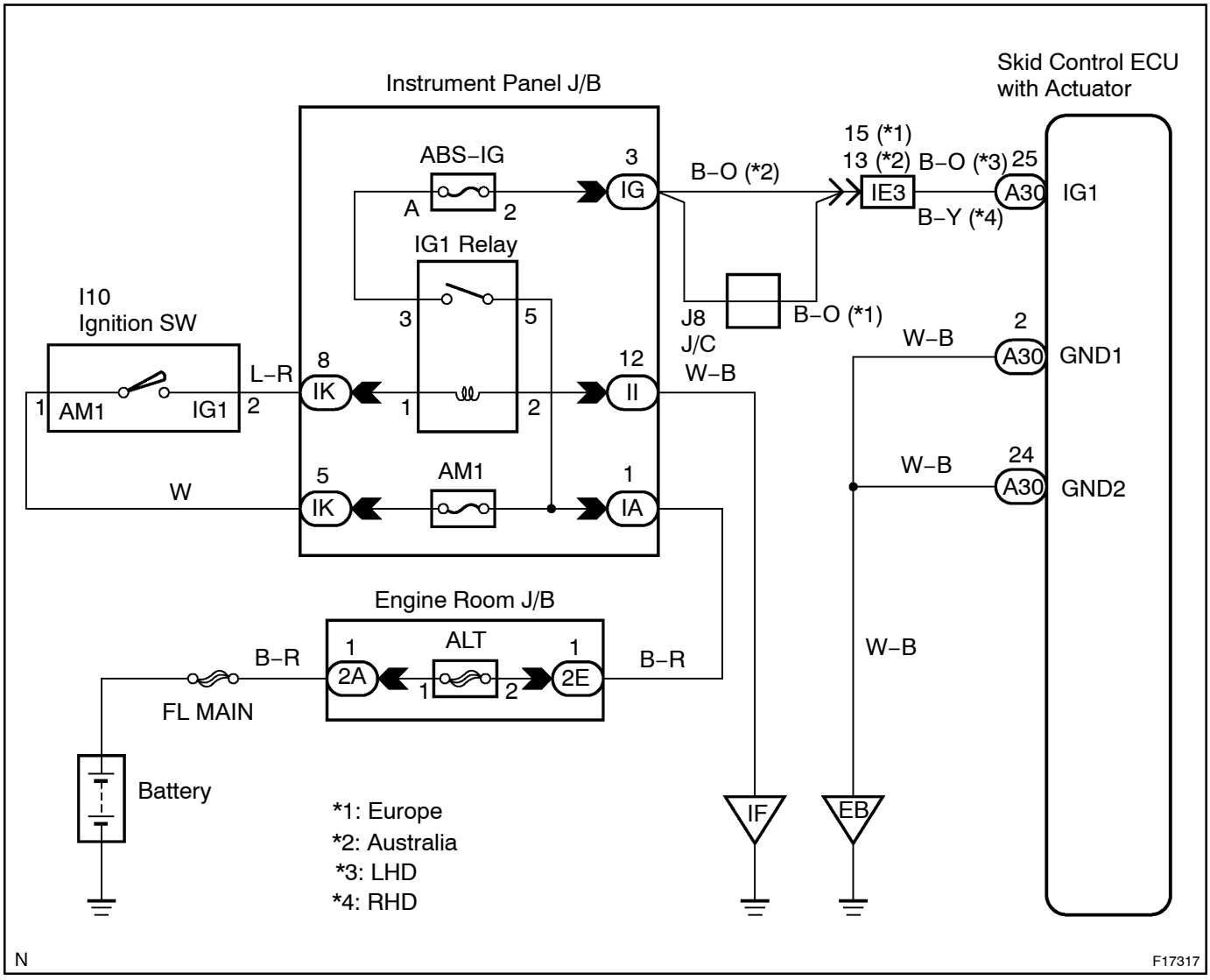

INSPECTION PROCEDURE

1	**Check ABS-IG fuse.**

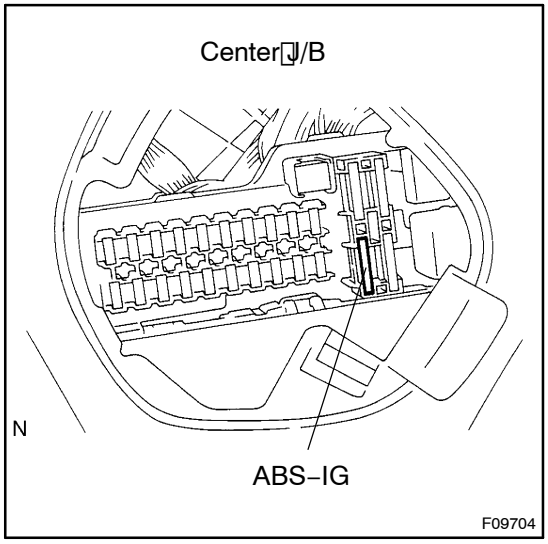

PREPARATION:

Remove the ABS-IG fuse from Center J/B.

CHECK:

Check continuity of the ABS-IG fuse.

OK:

Continuity

NG → **Check for short circuit in all the harness and components connected to ABS-IG fuse (See attached wiring diagram).**

OK

2	**Check battery voltage.**

OK:

Voltage: 10 – 14 V

NG → **Check and repair the charging system (See page IN-30).**

OK

3	**Check voltage of the ECU IG power source.**

In the case of using the hand–held tester:

PREPARATION:

(a) Connect the hand–held tester to the DLC3.

(b) Turn the ignition switch to ON and push the hand–held tester main switch ON.

(c) Select the item "IG VOLTAGE" in the DATA LIST and read its value displayed on the hand–held tester.

(d) Check the voltage condition output from the ECU and displayed on the hand–held tester.

CHECK:

OK: "Normal" is displayed. (Voltage: 10 – 14 V)

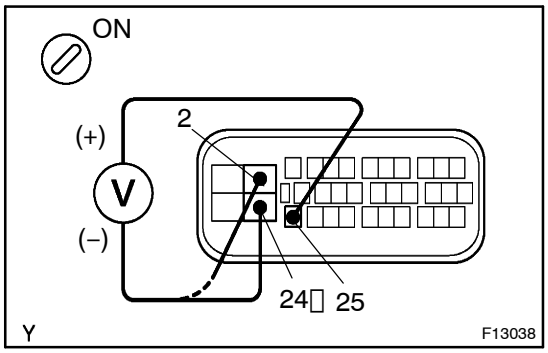

In the case of not using the hand–held tester:

PREPARATION:

(a) Disconnect the Skid Control ECU connector.

(b) Turn the ignition switch to ON.

CHECK:

Measure the voltage between terminal 25 and 2 or 24 of the skid control ECU connector.

OK: 10 – 14 V

OK	**Check or replace Skid Control ECU (ABS Actuator Assembly). (See page IN–30)**

NG

4	**Check continuity between terminals GND (2, 24) of Skid Control ECU connector and body ground.**

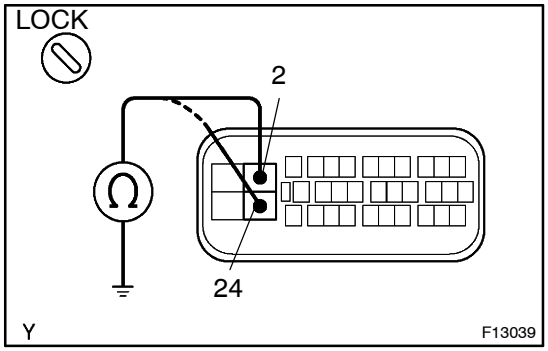

CHECK:

Measure the resistance between terminal 2 and 24 of Skid Control ECU harness side connector and body ground.

OK:

Resistance: 1 Ω or less

NG	**Repair or replace harness or connector.**

OK

Check for open circuit in harness and connector between Skid Control ECU and ABS–IG fuse (See page IN–30).