DI6SQ–05

| DTC | C1249/49 | Stop Light Switch Circuit |
|---|---|---|

## CIRCUIT DESCRIPTION

| DTC No. | DTC Detection Condition | Trouble Area |
|---|---|---|
| C1249/49 | When IG1 terminal voltage is from 9.5 V to 18.5 V and ABS is not in operation, the open circuit of the stop light switch circuit continues for 0.3 sec. or more. | • Stop light switch<br>• Stop light switch circuit<br>• Stop light bulb |

## WIRING DIAGRAM

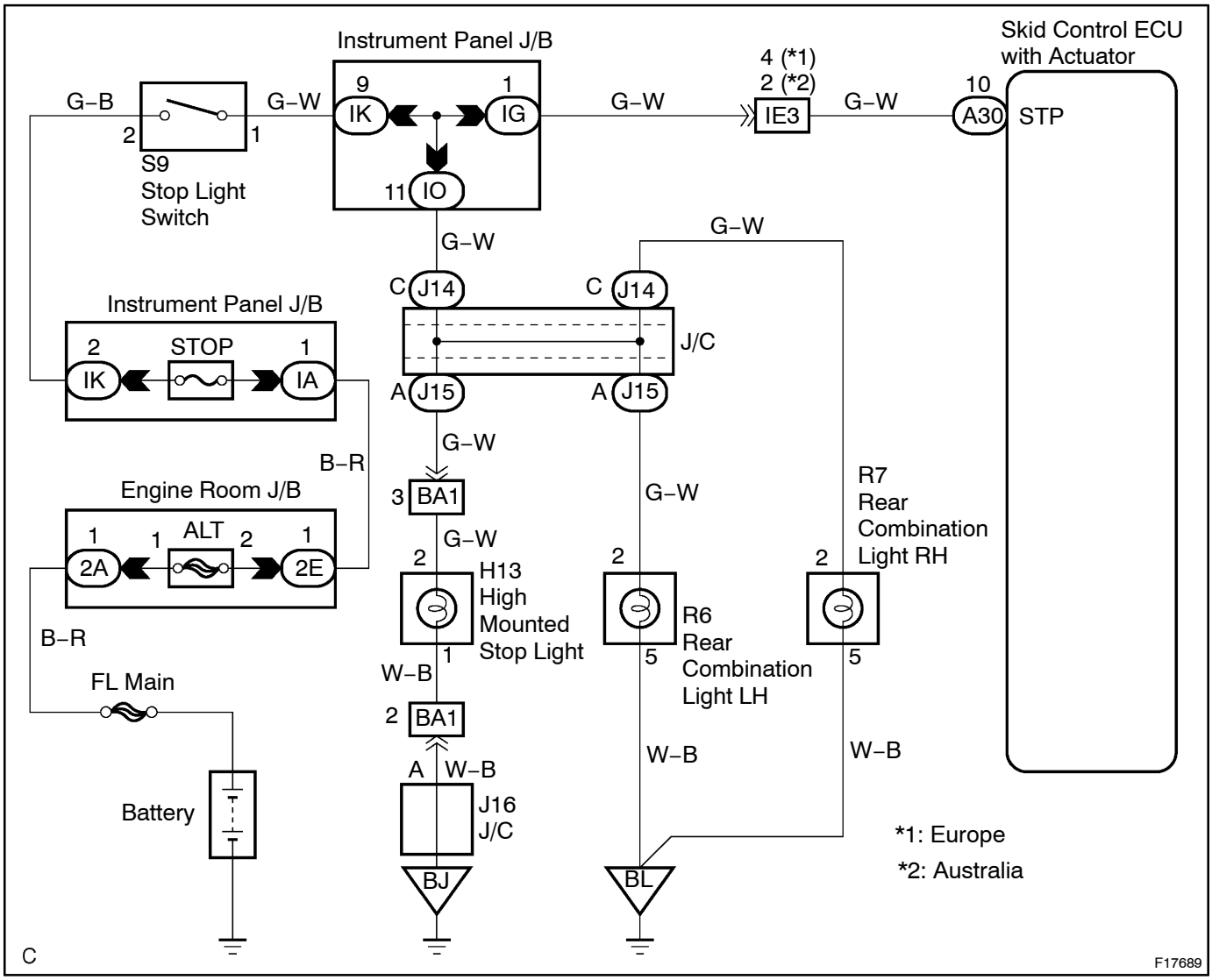

## INSPECTION PROCEDURE

| | |
|---|---|
| 1 | **Check operation of stop light.** |

**CHECK:**

Check that stop light comes on when brake pedal is depressed and goes off when brake pedal is released.

**NG** → **Repair stop light circuit.**

**OK**

| | |
|---|---|
| 2 | **Check voltage between terminal STP (10) of Skid Control ECU and body ground.** |

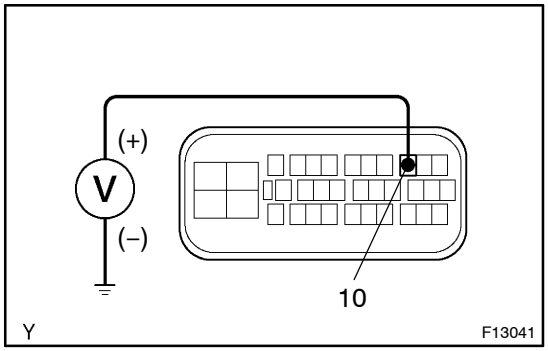


**PREPARATION:**

Disconnect Skid Control ECU connector.

**CHECK:**

Measure the voltage between terminal 10 of Skid Contorl ECU harness side connector and body ground when brake pedal is depressed.

**OK:**

**Voltage: 10 – 14 V**

**OK** → **Check and replace Skid Control ECU (ABS Actuator Assembly). (See page IN–30)**

**NG**

| | |
|---|---|
| 3 | **Check for open circuit in harness and connector between Skid Control ECU and stop light switch (See page IN–30).** |

**NG** → **Repair or replace harness or connector.**

**OK**

**Check and replace Skid Contorl ECU (ABS Actuator Assembly). (See page IN–30)**