DIAIM–02

DTC	C1251/51	ABS Pump Motor Lock

CIRCUIT DESCRIPTION

DTC No.	DTC Detecting Condition	Trouble Area
C1251/51	When the actuator pump drive motor dose not rotate correctly.	ABS pump motor

WIRING DIAGRAM

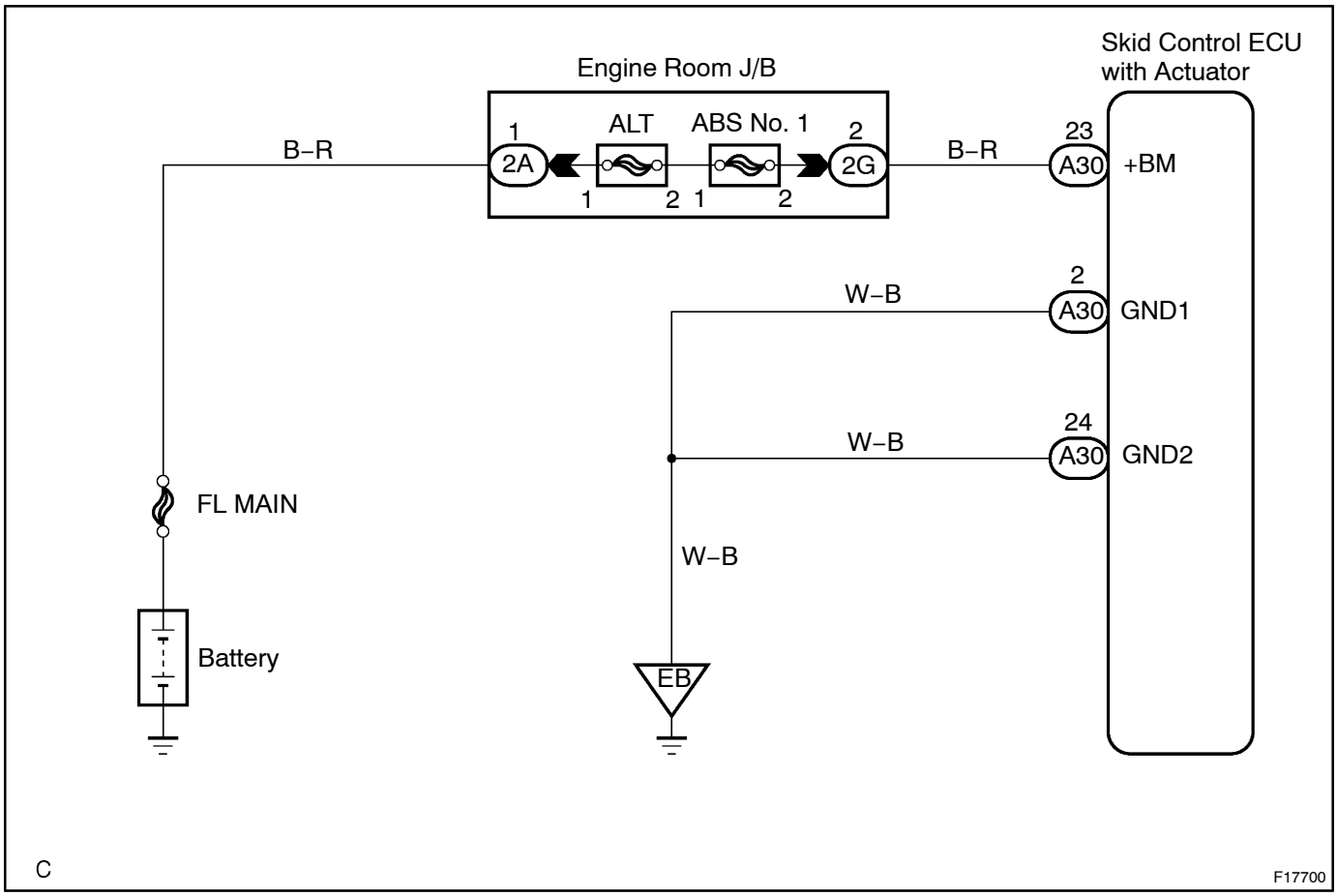

INSPECTION PROCEDURE

1	**Check ABS pump motor operation.**

PREPARATION:

(a) Connect the hand–held tester to the DLC3.

(b) Turn the ignition switch to ON and push the hand–held tester main switch ON.

(c) Select the ACTIVE TEST mode on the hand–held tester.

CHECK:

Check the operation sound of the ABS pump motor when operating it with the hand–held tester.

OK:

The operation sound of the ABS pump motor should be heard.

OK → **Proceed to next circuit inspection shown in problem symptoms chart (See page DI–14).**

NG

2	**Check continuity between terminals GND (2, 24) of Skid Control ECU connector and body ground.**

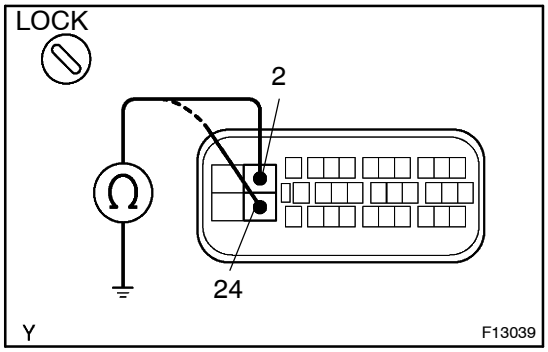

CHECK:

Measure the resistance between terminals 2 and 24 of Skid Control ECU harness side connector and body ground.

OK:

Resistance: 1 Ω or less

NG → **Repair or replace harness or connector.**

OK

Check and replace Skid Control ECU (ABS Actuator Assembly). (See page IN–30)