DI6MN–22

ABS Warning Light Circuit

CIRCUIT DESCRIPTION

If ECU detects trouble, it turns on the ABS warning light, and prohibit the ABS control at the same time. At this time, the ECU records a DTC in memory.
Connect terminal Tc and CG of the DLC3 to make the ABS warning light blink and output DTC.

WIRING DIAGRAM

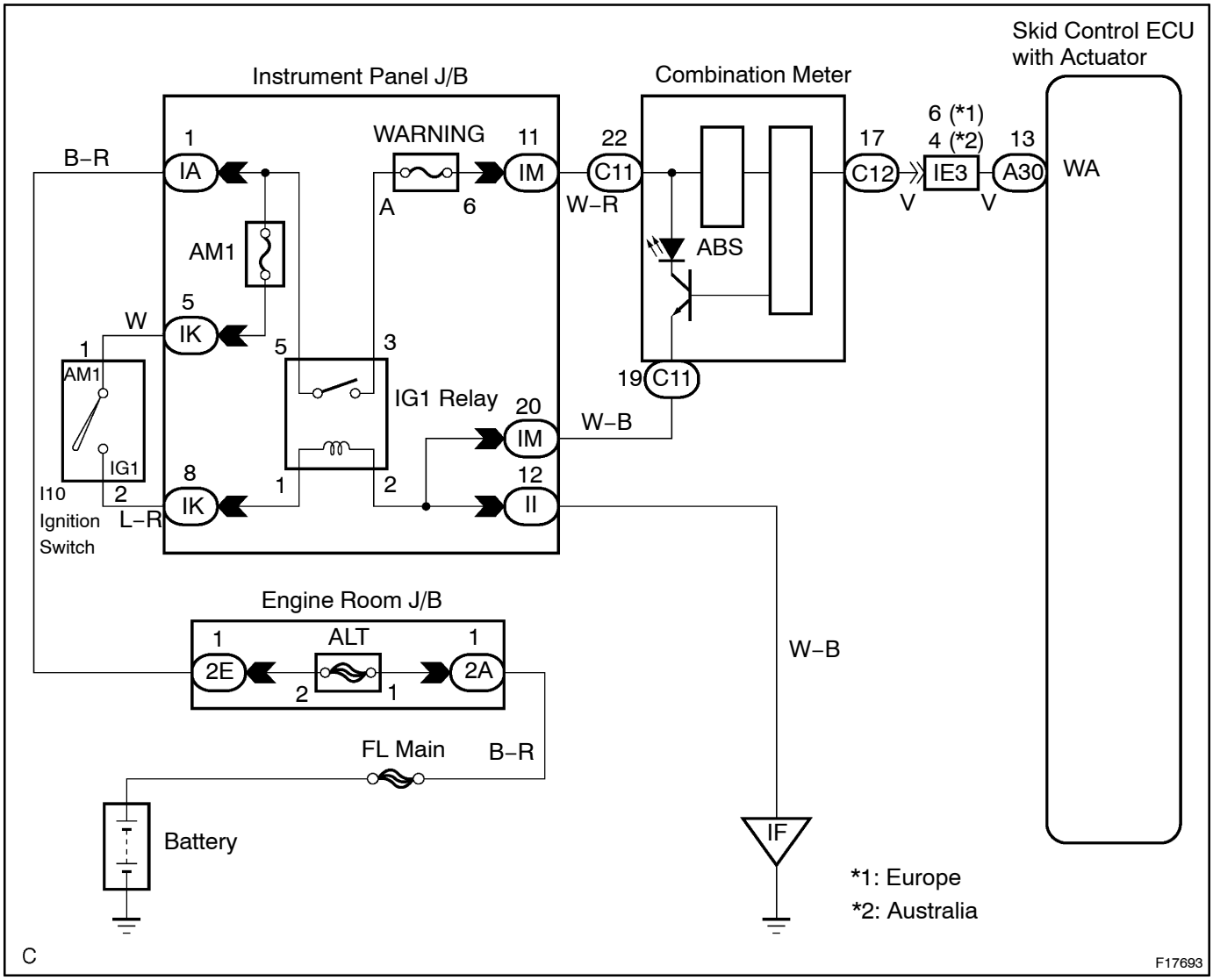

INSPECTION PROCEDURE

HINT:

Troubleshoot in accordance with the chart below for each trouble symptom.

ABS warning light does not come on	*1
ABS warning light remains on	*2

*1: Start the inspection from step 1 in the case of using the hand–held tester and start from step 2 in the case of not using hand–held tester.

*2: After inspection of step 3, start the inspection from step 4 in the case of using the hand–held tester and start from step 5 in the case of not using hand–held tester.

1	**Check operation of the ABS warning light.**

PREPARATION:

(a) Connect the hand–held tester to the DLC3.

(b) Turn the ignition switch ON and push the hand–held tester main switch ON.

(c) Select the ACTIVE TEST mode on the hand–held tester.

CHECK:

Check that "ON" of the ABS warning light can be shown on the combination meter using the hand–held tester.

HINT:

ABS warning light turns "OFF" automatically 2 seconds after it is turnd "ON".

OK → **Check and replace Skid Control ECU (ABS Actuator Assembly). (See page IN–30)**

NG

2	**Check ABS warning light.**

See combination meter troubleshooting on page BE–2.

NG → **Repair bulb or combination meter assembly.**

OK

3	**Check that the ECU connector is securely connected to the ECU.**

NO → **Connect the connector to the ECU.**

YES

Check for open circuit in harness and connector between combination meter and Skid Control ECU (ABS Actuator Assembly) (See page IN-30).

4	**Check operation of the ABS warning light (See step 1).**

OK → **Check and replace Skid Control ECU (ABS Actuator Assembly). (See page IN-30)**

NG

5	**Is DTC output?**

Check DTC on page DI-3.

YES → **Repair circuit indicated by the output code.**

NO

Check for short circuit in harness and connector between DLC3 and Skid Control ECU (See page IN-30).