Tc Terminal Circuit

CIRCUIT DESCRIPTION

Connecting between terminal Tc and CG of the DLC3 causes the ECU to display DTC by flashing the ABS warning light.

WIRING DIAGRAM

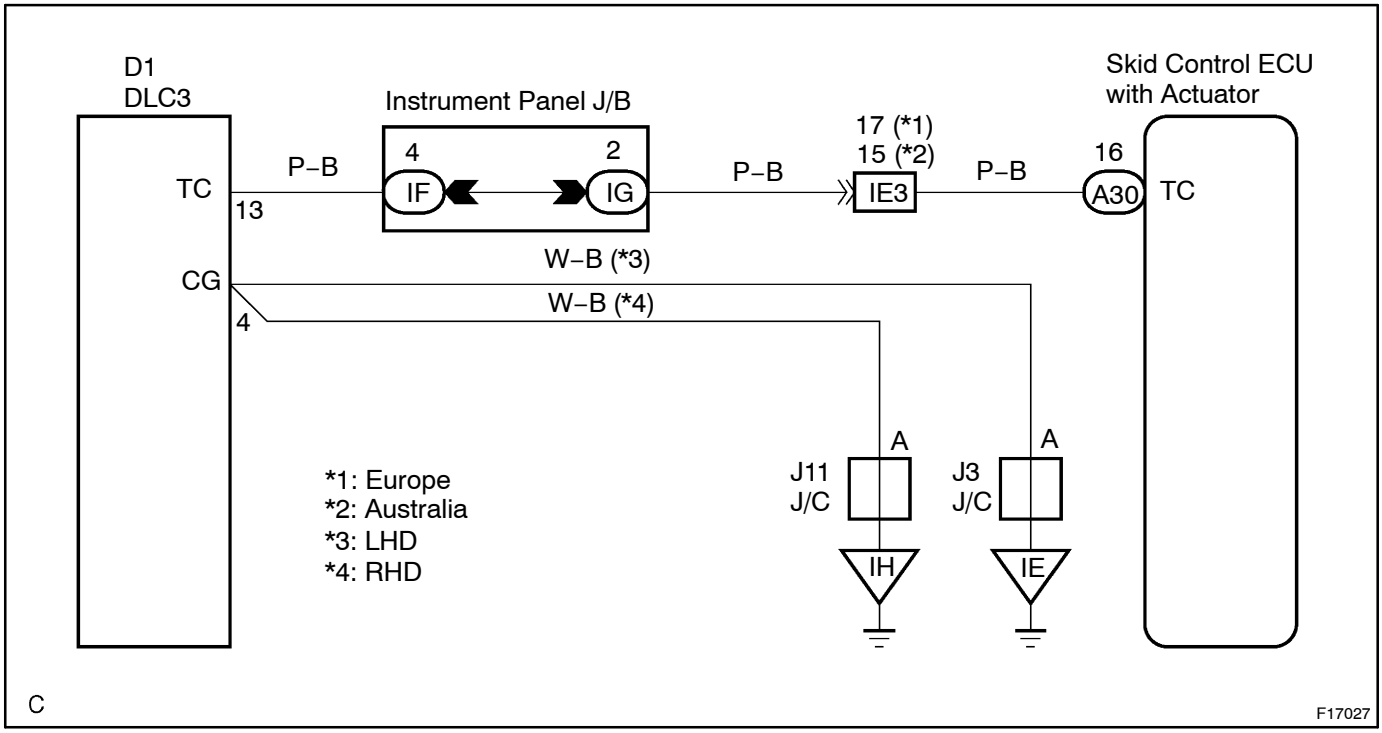

INSPECTION PROCEDURE

1	**Check voltage between terminals Tc and CG of DLC3.**

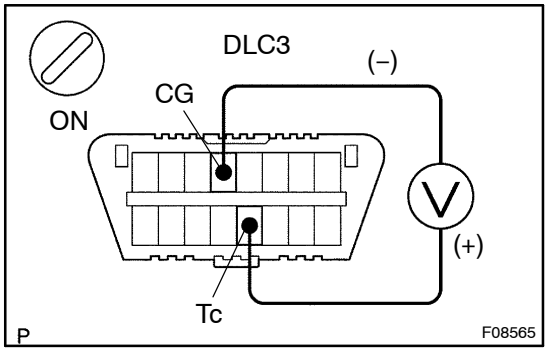

CHECK:

(a) Turn the ignition switch to ON.

(b) Measure the voltage between terminal Tc and CG of DLC3.

OK:

Voltage: 10 – 14 V

NG → **Go to step 3.**

OK

2	**Check for open and short circuit in harness and connector between Skid Control ECU and DLC3, DLC3 and body ground (See page IN-30).**

NG → **Repair or replace harness or connector.**

OK

Check and replace Skid Control ECU (ABS Actuator Assembly). (See page IN-30)

3	**Check ABS warning light.**

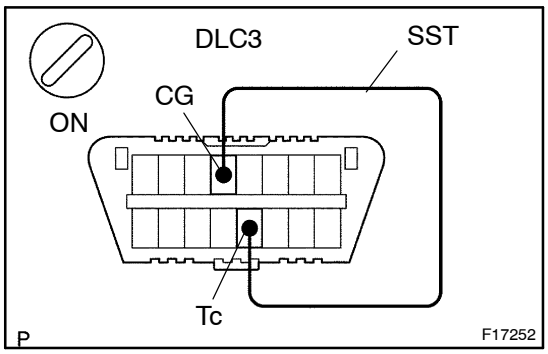

(a) Using SST, connect the terminal Tc and CG of the DLC3.
SST 09843-18040
(b) Turn the ignition switch to ON.
(c) Check the ABS warning light.

OK:

ABS warning light blinks

OK → **END**

NG

Check and replace Skid Control ECU (ABS Actuator Assembly). (See page IN-30)