DIAIO–02

Ts Terminal Circuit

CIRCUIT DESCRIPTION

The sensor check circuit detects abnormalities in the speed sensor signal which cannot be detected with the DTC check.
Connecting terminal Ts and CG of the DLC3 starts the check.

WIRING DIAGRAM

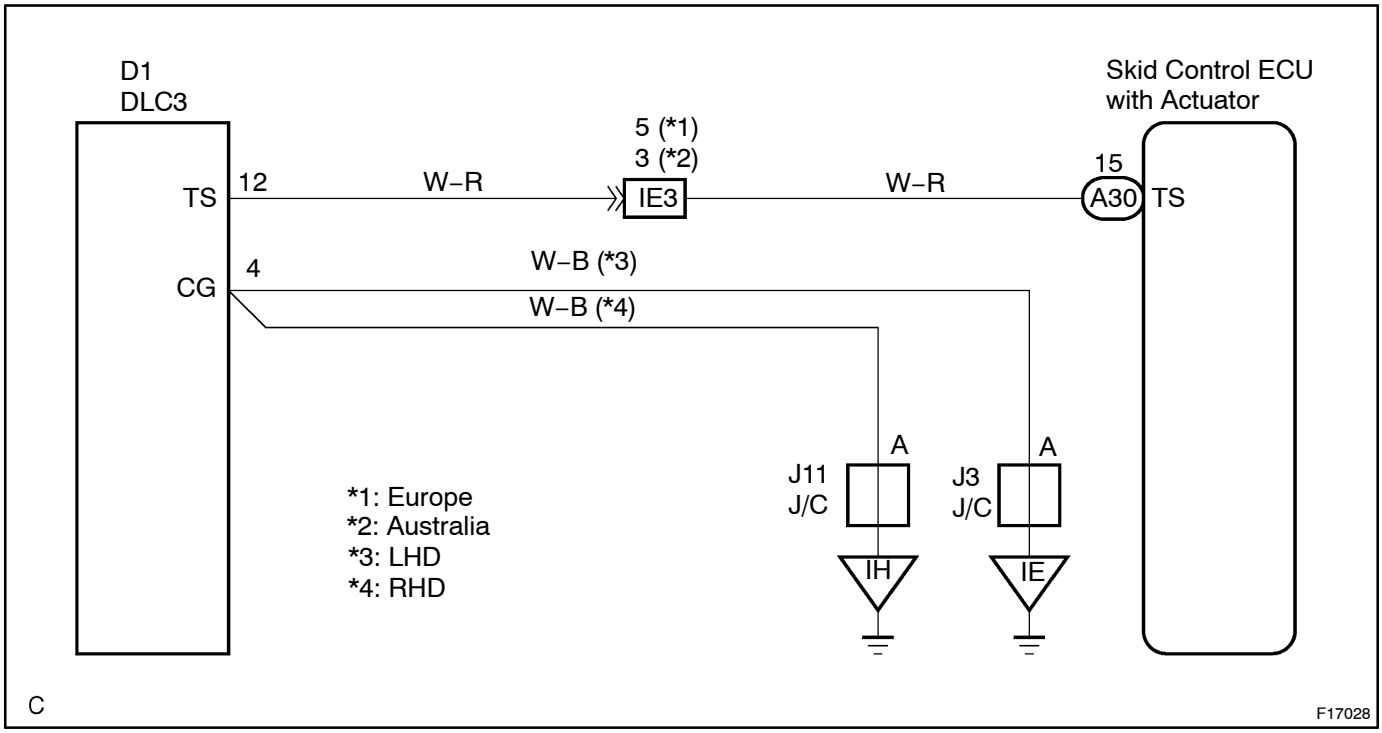

INSPECTION PROCEDURE

1	**Check voltage between terminals Ts and CG of DLC3.**

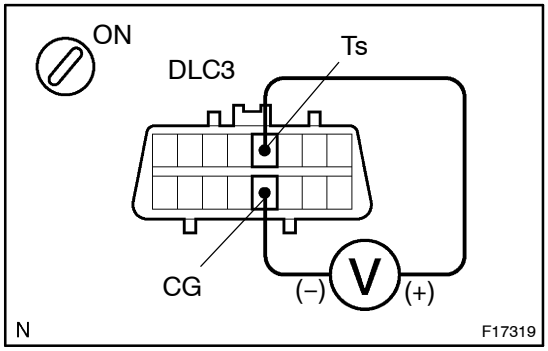

CHECK:

(a) Turn the ignition switch to ON.

(b) Measure the voltage between terminal Ts and CG of DLC3.

OK:

Voltage: 10 – 14 V

NG → **Go to step 3.**

OK

2	**Check for open and short circuit in harness and connector between Skid Control ECU and DLC3, DLC3 and body ground (See page IN-30).**

NG → **Repair or replace harness or connector.**

OK

Check and replace Skid Control ECU (ABS Actuator Assembly). (See page IN-30)

3	**Check ABS warning light.**

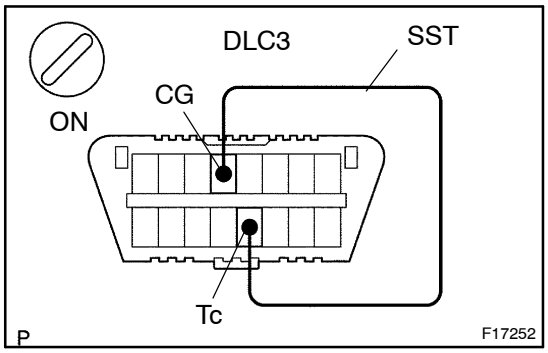

(a) Using SST, connect the terminal Tc and CG of the DLC3.
SST 09843-18040

(b) Turn the ignition switch to ON.

(c) Check the ABS warning light.

OK:

ABS warning light blinks

OK → **END**

NG

Check and replace Skid Control ECU (ABS Actuator Assembly). (See page IN-30)