DI9IG–02

DTC	C1241 / 41	IG Power Source Circuit

CIRCUIT DESCRIPTION

DTC No.	DTC Detecting Condition	Trouble Area
C1241 / 41	Detection of either conditions 1. through 2.: 1. Vehicle speed is 3 km/h (1.9 mph) or more and voltage of ECU terminal IG remains at below 9.5 V for more than 10 sec. 2. While the condition that the solenoid relay is ON continues, ECU terminal IG1 voltage becomes 9.5 V or less, and the condition that the contact point of the solenoid relay is OFF continues for 0.2 sec. or more.	• Battery • Charging system • Power source circuit • Skid Control ECU

WIRING DIAGRAM

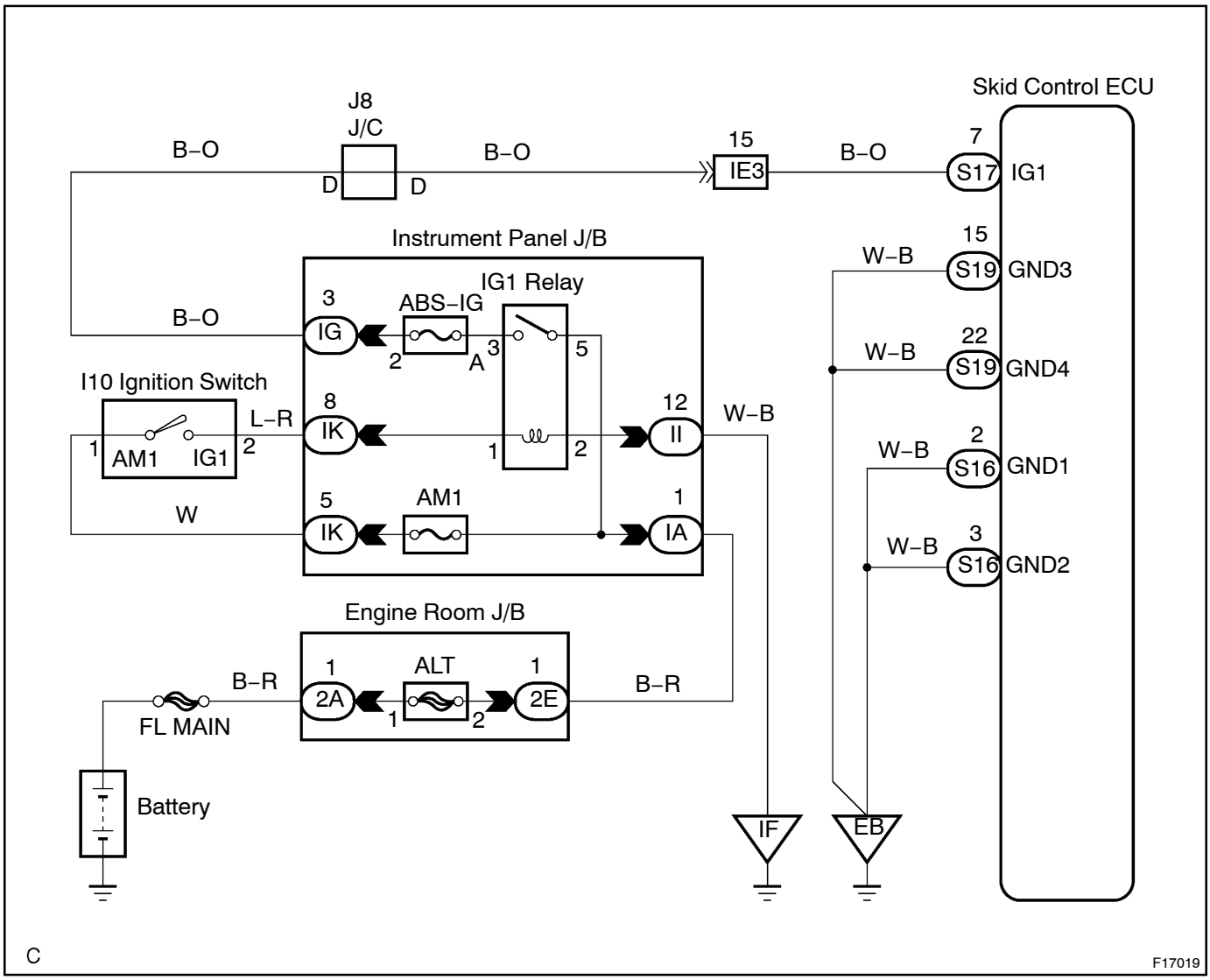

INSPECTION PROCEDURE

1	**Check ABS–IG fuse.**

PREPARATION:
Remove ABS–IG fuse from instrument panel J/B.
CHECK:
Check continuity of ABS–IG fuse.
OK:
Continuity

NG → **Check for short circuit in all the harness and components connected to ABS fuse (See attached wiring diagram).**

OK

2	**Check battery voltage.**

OK:
Voltage: 10 – 14 V

NG → **Check and repair the charging system.**

OK

3	**Check voltage of the ECU IG power souce.**

In case of using the hand-held tester.

PREPARATION:

(a) Connect the hand-held tester to the DLC3.

(b) Turn the ignition switch ON and push the hand-held tester main switch ON.

(c) Select the DATALIST mode on the hand-held tester.

CHECK:

Check the voltage condition output from the ECU displayed by the hand-held tester.

OK:

"Normal" is displayed.

In case of not using the hand-held tester.

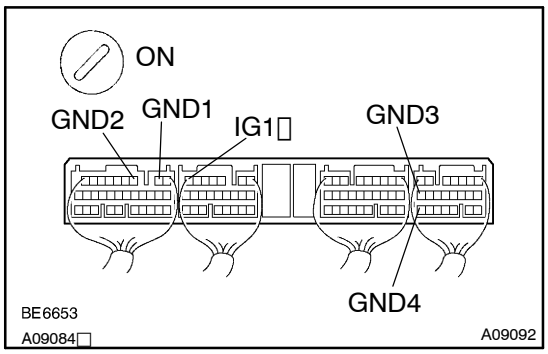

PREPARATION:

Remove the skid control ECU with connectors still connected.

CHECK:

(a) Turn the ignition switch ON.

(b) Measure voltage between terminals IG1 and GND of skid control ECU.

OK:

Voltage: 10 – 14 V

OK	**Ignition switch OFF, check and replace skid control ECU.**

NG

4	**Check continuity between terminal GND of skid control ECU connector and body ground.**

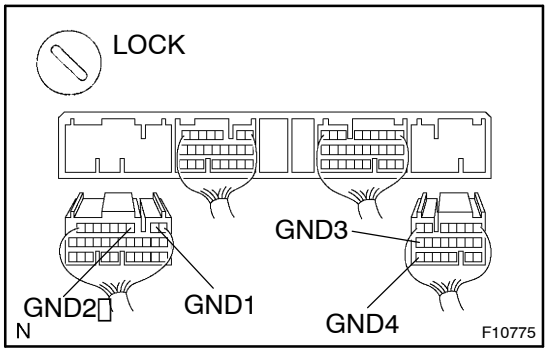

CHECK:

(a) Disconnect the 2 connector from the skid control ECU.

(b) Measure resistance between terminal GND of skid control ECU connector and body ground.

OK:

Resistance: 1 Ω or less

NG	**Repair or replace harness or connector.**

OK

Check for open circuit in harness and connector between skid control ECU and battery (See page IN–30).