DTC	C1336/39	Zero Point Calibration of Deceleration Sensor Undone

CIRCUIT DESCRIPTION

DTC No.	DTC Detecting Condition	Trouble Area
C1336/39	After battery terminal was connected, when the shift lever was moved other than to P position within 15 sec. soon after ECU terminal IG1 become ON for the first time.	• Deceleration sensor • Deceleration sensor circuit • P position switch circuit

WIRING DIAGRAM

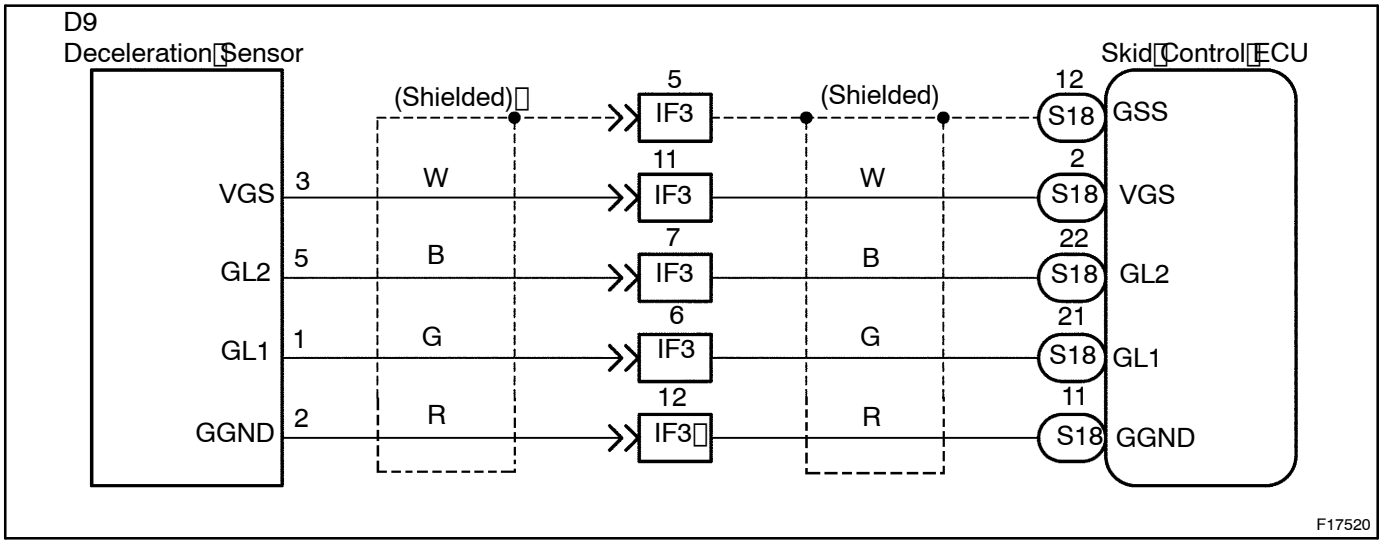

INSPECTION PROCEDURE

1	Check if zero point calibration of deceleration sensor has done or not.

Obtains the zero point calibration of the deceleration sensor (See page DI–53).

CHECK:

Check that the VSC indicator light comes on and the both indicators go off after 15 seconds.

YES	No problem.

NO

2	Check for open and short circuit in harness and connector between P position switch and skid control ECU and ECM (See page IN–30).

NG → Repair or replace harness or connector.

OK

3	Check for open and short circuit in harness and connector between deceleration sensor and skid control ECU (See page IN–30).

NG → Repair or replace harness or connector.

OK

4	Check deceleration sensor (See page DI–113).

NG → Replace deceleration sensor assembly.

OK

Check and replace skid control ECU.