DI0X4–17

Tc Terminal Circuit

CIRCUIT DESCRIPTION

Connecting terminals Tc and CG of the DLC3 causes the ECU to display the DTC by flashing the ABS warning light and VSC warning light.

WIRING DIAGRAM

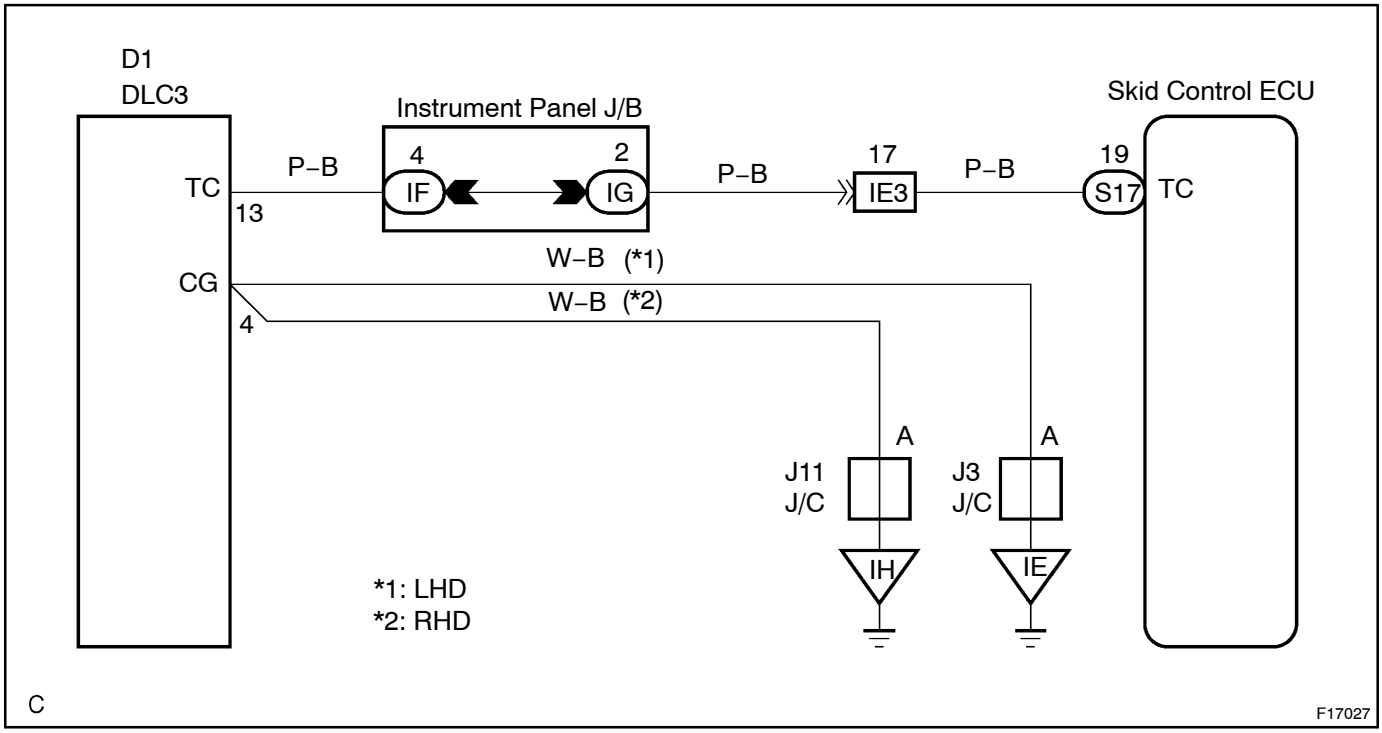

INSPECTION PROCEDURE

1	**Check voltage between terminals Tc and CG of the DLC3.**

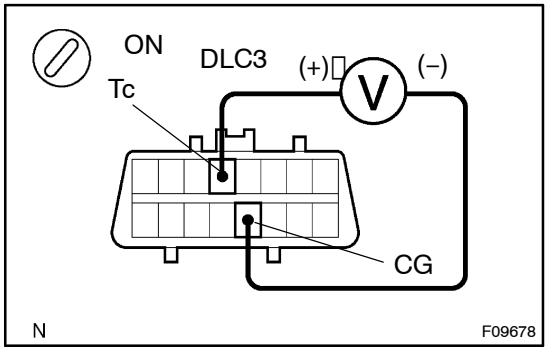

PREPARATION:
Turn the ignition switch ON.
CHECK:
Measure voltage between terminal Tc and CG of DLC3.
OK:
Voltage: 10 – 14 V

OK → **If ABS warning light and VSC warning light does not blink even after Tc and CG have been connected, the ECU may be defective.**

NG

2	**With ignition switch OFF, check for open and short circuit in harness and connector between skid control ECU and DLC3, DLC3 and body ground (See page IN–30).**

NG → **Repair or replace harness or connector.**

OK

Check and replace skid control ECU.