DI0CM–11

Ts Terminal Circuit

CIRCUIT DESCRIPTION

The sensor check circuit detects abnormalities in the speed sensor signal which cannot be detected with the DTC check. Connecting terminals Ts and CG of the DLC3 starts the check.

WIRING DIAGRAM

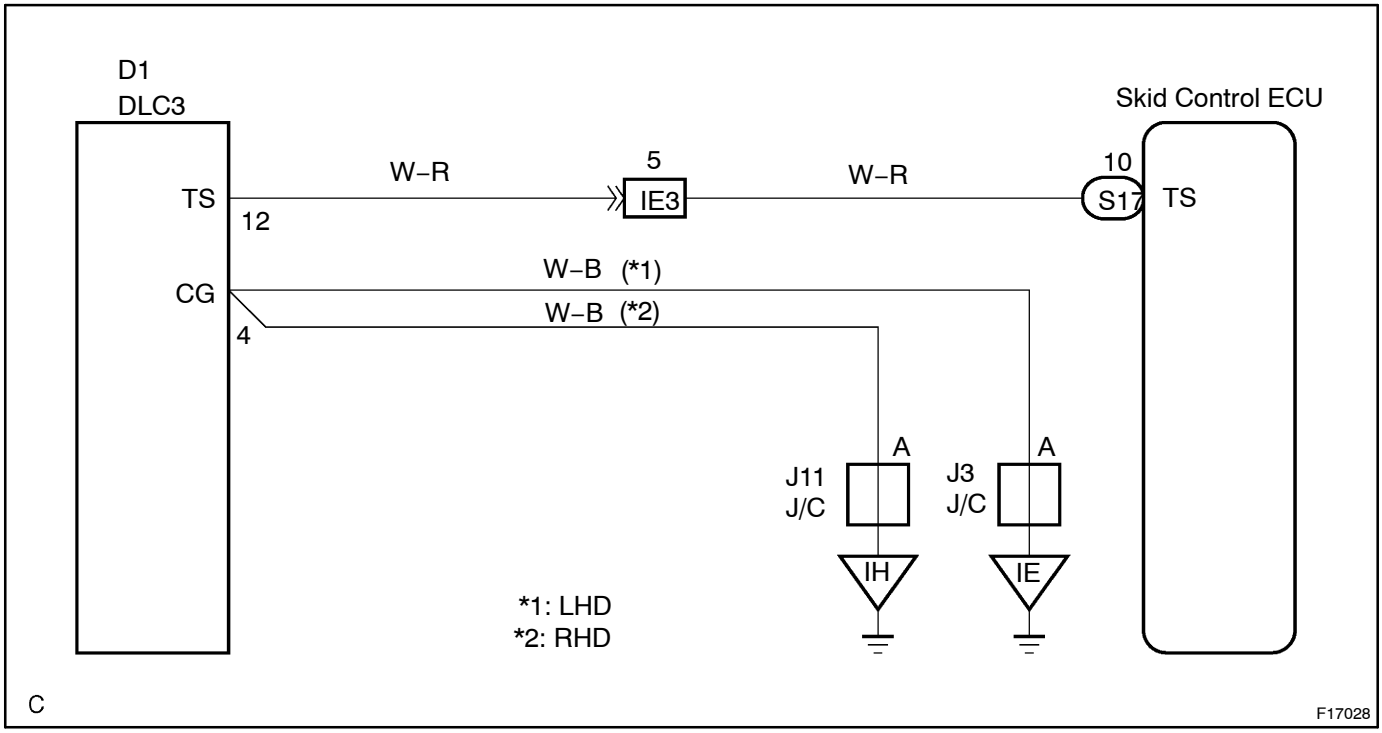

INSPECTION PROCEDURE

1	**Check voltage between terminals Ts and CG of DLC3.**

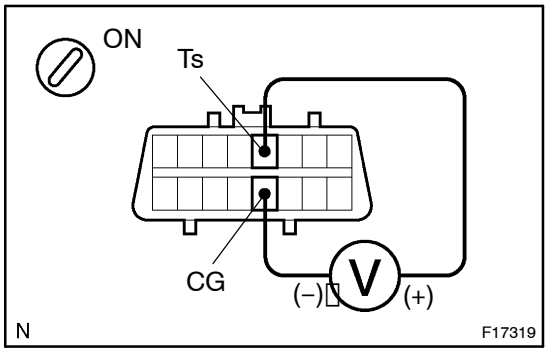

CHECK:

(a) Turn the ignition switch ON.

(b) Measure voltage between terminals Ts and CG of DLC3.

OK:

Voltage: 10 – 14 V

OK → **If ABS warning light does not blink even after Ts and CG have been connected, the ECU may be defective.**

NG

2	**Check for open and short circuit in harness and connector between skid control ECU and DLC3, DLC3 and body ground (See page IN–30).**

NG → **Repair or replace harness or connector.**

OK

Check and replace skid control ECU.