(Cont. next page)

Air Conditioner

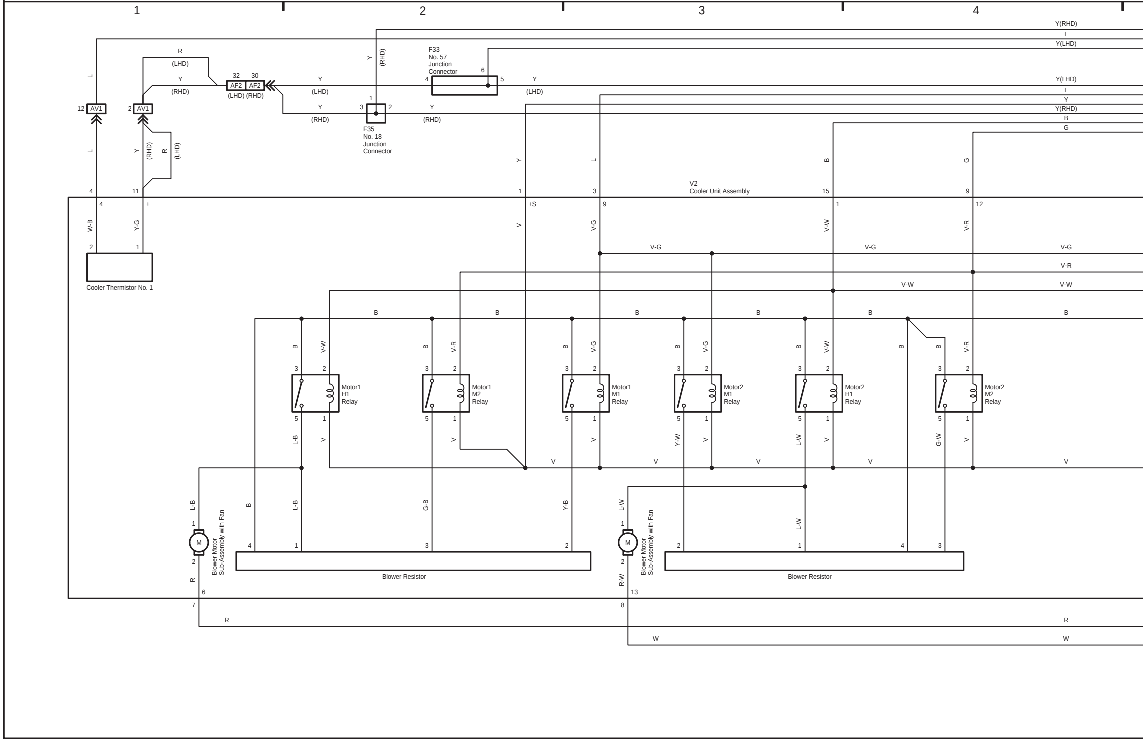
1
2
3
4
Y(RHD)
L
Y(LHD)
R
(LHD)
Y
(RHD)
32
30
AF2
AF2
(LHD) (RHD)
Y
(LHD)
Y
(RHD)
Y
(RHD)
F33
No. 57
Junction
Connector
6
4
5
Y
(LHD)
Y(LHD)
L
Y
Y(RHD)
B
G
1
3
2
Y
(RHD)
F35
No. 18
Junction
Connector
12 AV1
2 AV1
L
L
Y
(RHD)
R
(LHD)
4
11
Y
L
B
G
1
3
V2
Cooler Unit Assembly
15
9
4
+
+S
9
1
12
W-B
Y-G
V
V-G
V-W
V-R
2
1
Cooler Thermistor No. 1
V-G
V-G
V-G
V-R
V-W
V-W
B
B
B
B
B
B
Motor1 H1 Relay
Motor1 M2 Relay
Motor1 M1 Relay
Motor2 M1 Relay
Motor2 H1 Relay
Motor2 M2 Relay
L-B
Y-W
L-W
G-W
V
V
V
V
V
L-B
B
L-B
G-B
Y-B
L-W
L-W
M
Blower Motor Sub-Assembly with Fan
Blower Resistor
Blower Resistor
R
R-W
6
13
7
8
R
R
W
W

Air Conditioner

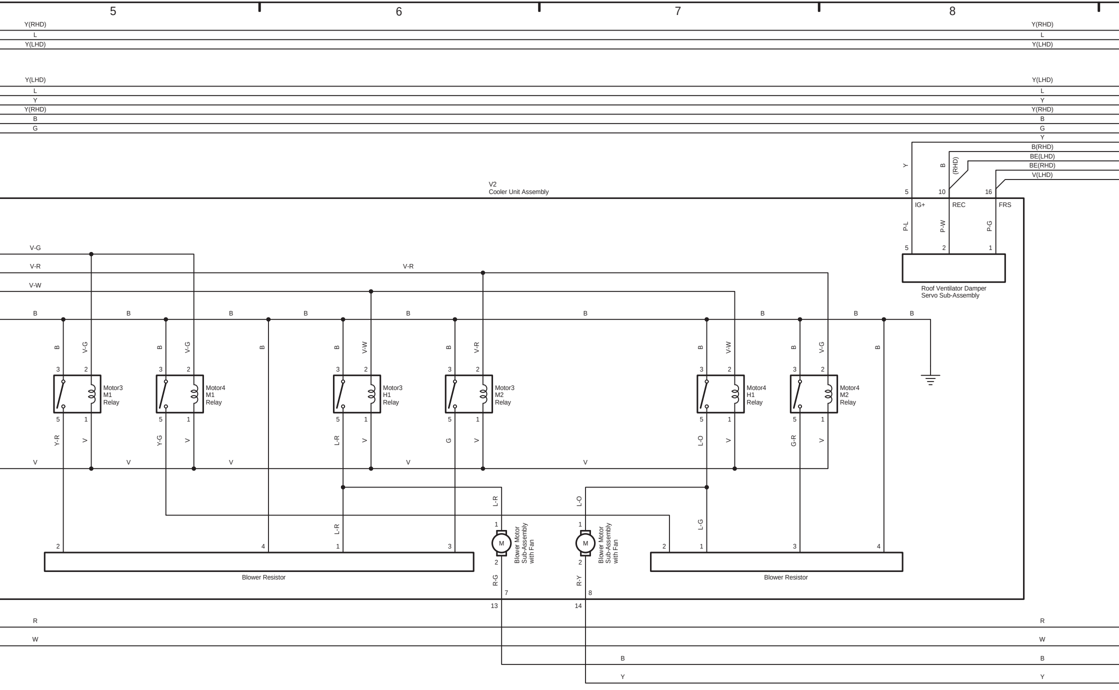
5
6
7
8
Y(RHD)
L
Y(LHD)
Y(LHD)
L
Y
Y(RHD)
B
G
Y
B(RHD)
BE(LHD)
BE(RHD)
V(LHD)
(RHD)
V2
Cooler Unit Assembly
IG+
REC
FRS
P-L
P-W
P-G
Roof Ventilator Damper
Servo Sub-Assembly
V-G
V-R
V-W
B
V
Motor3
M1
Relay
Motor4
M1
Relay
Motor3
H1
Relay
Motor3
M2
Relay
Motor4
H1
Relay
Motor4
M2
Relay
Y-R
Y-G
L-R
L-O
G-R
L-G
M
Blower Motor
Sub-Assembly
with Fan
R-G
R-Y
Blower Resistor
Blower Resistor
13
14
R
W
B
Y

(Cont. next page)

Air Conditioner

* 2 :2TR-FE
* 5 :1BZ-FPE
* 6 :14B, 1HZ
*10 :N04C-UH, N04C-VL

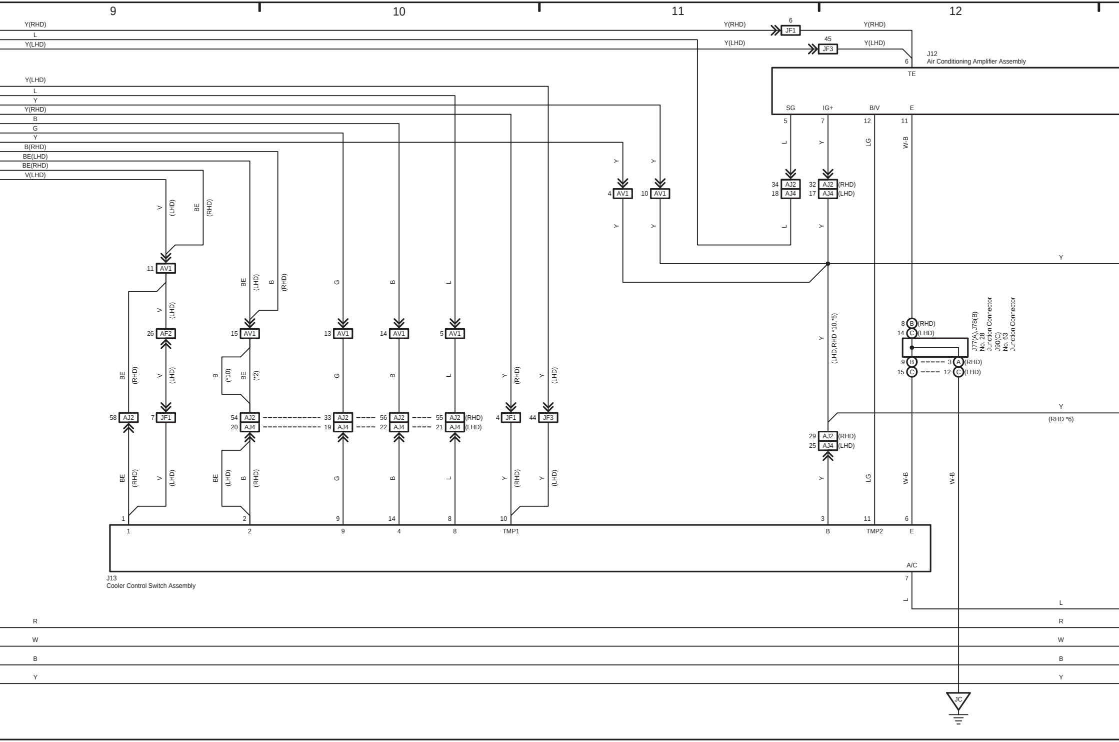
9
10
11
12
Y(RHD)
L
Y(LHD)
JF1
JF3
J12
Air Conditioning Amplifier Assembly
TE
SG
IG+
B/V
E
Y(LHD)
L
Y
Y(RHD)
B
G
Y
B(RHD)
BE(LHD)
BE(RHD)
V(LHD)
AV1
AF2
AJ2
AJ4
(RHD)
(LHD)
(*10)
(*2)
(LHD,RHD *10,*5)
(RHD *6)
J77(A),J78(B)
No. 28
Junction Connector
J90(C)
No. 63
Junction Connector
LG
W-B
J13
Cooler Control Switch Assembly
TMP1
TMP2
A/C
R
W
B
Y
JC

Air Conditioner

* 1 :N04C-UH, N04C-VL, N04C-VQ
* 2 :2TR-FE
* 5 :1BZ-FPE
* 6 :14B, 1HZ

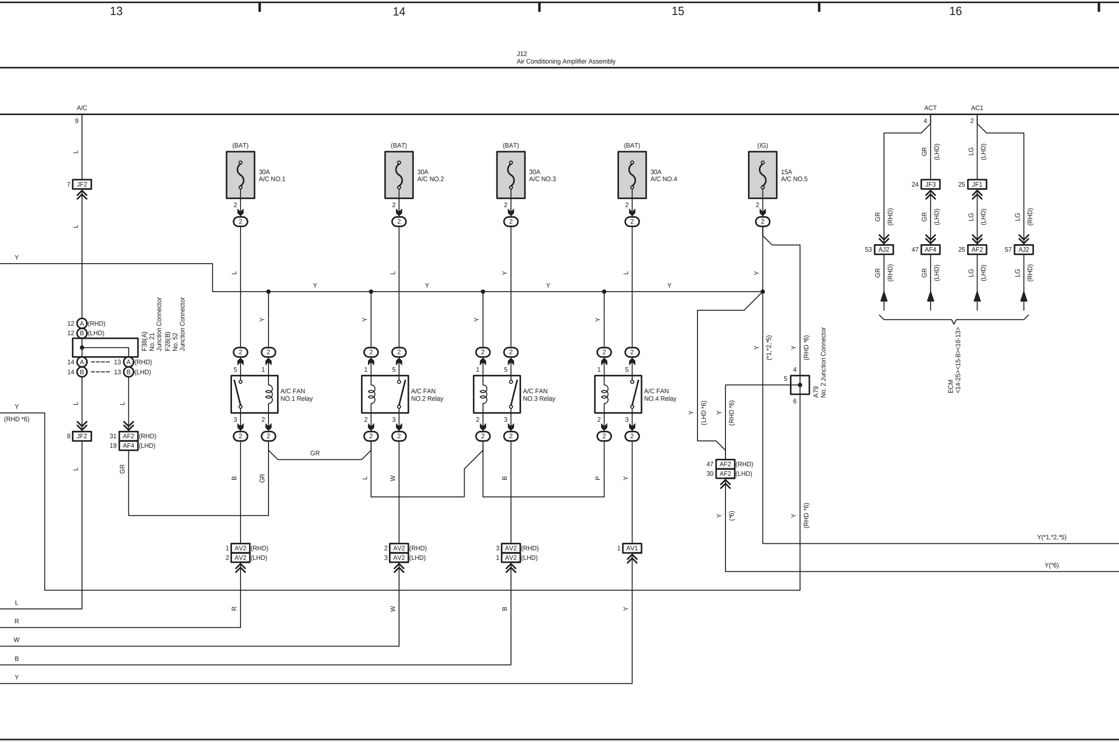
13
14
15
16
J12
Air Conditioning Amplifier Assembly
A/C
9
ACT
4
AC1
2
(BAT)
30A
A/C NO.1
(BAT)
30A
A/C NO.2
(BAT)
30A
A/C NO.3
(BAT)
30A
A/C NO.4
(IG)
15A
A/C NO.5
7 JF2
8 JF2
24 JF3
25 JF1
53 AJ2
47 AF4
25 AF2
57 AJ2
GR (RHD)
GR (LHD)
LG (LHD)
LG (RHD)
12 A (RHD)
12 B (LHD)
14 A 13 A (RHD)
14 B 13 B (LHD)
F38(A)
No. 21
Junction Connector
F28(B)
No. 52
Junction Connector
31 AF2 (RHD)
19 AF4 (LHD)
A/C FAN
NO.1 Relay
A/C FAN
NO.2 Relay
A/C FAN
NO.3 Relay
A/C FAN
NO.4 Relay
1 AV2 (RHD)
2 AV2 (LHD)
2 AV2 (RHD)
3 AV2 (LHD)
3 AV2 (RHD)
1 AV2 (LHD)
1 AV1
A79
No. 2 Junction Connector
47 AF2 (RHD)
30 AF2 (LHD)
ECM
<14-25><15-8><16-13>
Y (*1,*2,*5)
Y (RHD *6)
Y (LHD *6)
Y (*6)
(RHD *6)
Y(*1,*2,*5)
Y(*6)
L
R
W
B
Y
GR
P

(Cont. next page)

Air Conditioner

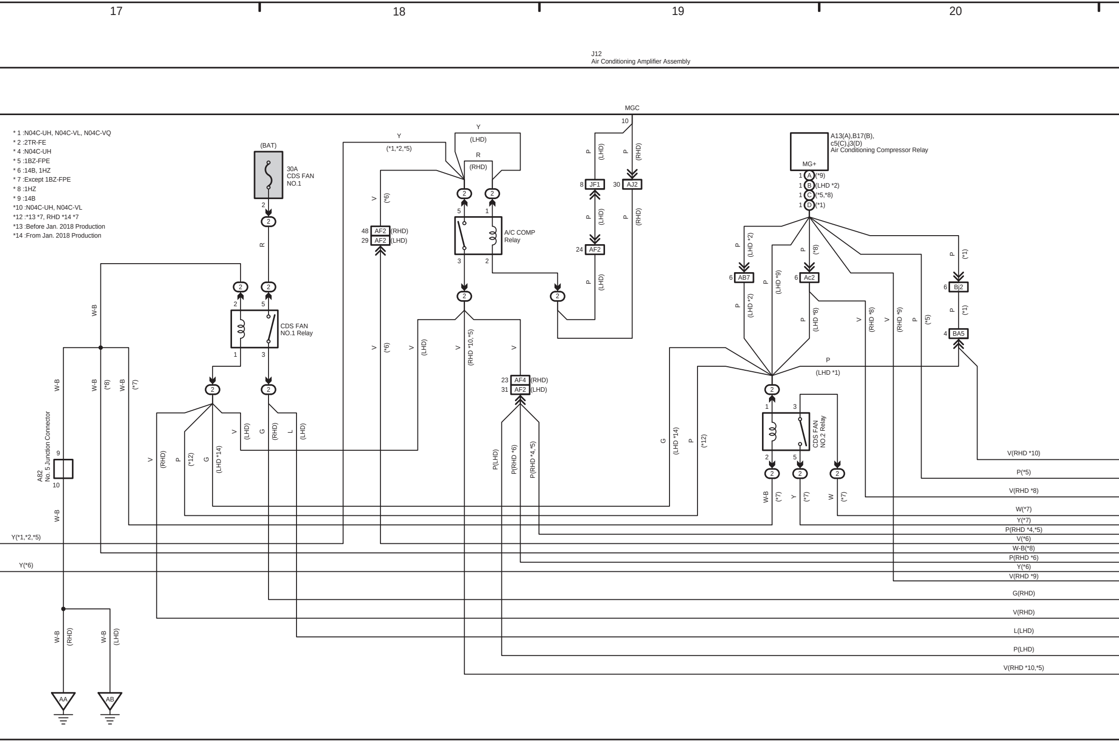
17
18
19
20
J12
Air Conditioning Amplifier Assembly
MGC
10
(BAT)
30A
CDS FAN
NO.1
CDS FAN
NO.1 Relay
A/C COMP
Relay
CDS FAN
NO.2 Relay
A13(A),B17(B),
c5(C),j3(D)
Air Conditioning Compressor Relay
MG+
1 A (*9)
1 B (LHD *2)
1 C (*5,*8)
1 D (*1)
8 JF1
30 AJ2
24 AF2
48 AF2 (RHD)
29 AF2 (LHD)
23 AF4 (RHD)
31 AF2 (LHD)
6 AB7
6 Ac2
6 Bj2
4 BA5
A82
No. 5 Junction Connector
9
10
AA
AB
Y (*1,*2,*5)
Y (LHD)
R (RHD)
V (*6)
V (LHD)
V (RHD *10,*5)
P (LHD)
P (RHD)
P (LHD *2)
G (LHD *14)
P (*12)
P (*8)
P (*1)
P (*5)
P (LHD *1)
V (RHD *8)
V (RHD *9)
P(LHD)
P(RHD *6)
P(RHD *4,*5)
W-B
W-B (*8)
W-B (*7)
W-B (RHD)
W-B (LHD)
V (RHD)
G (RHD)
L (LHD)
W-B (*7)
Y (*7)
W (*7)
Y(*1,*2,*5)
Y(*6)
V(RHD *10)
P(*5)
V(RHD *8)
W(*7)
Y(*7)
P(RHD *4,*5)
V(*6)
W-B(*8)
P(RHD *6)
Y(*6)
V(RHD *9)
G(RHD)
V(RHD)
L(LHD)
P(LHD)
V(RHD *10,*5)

* 1 :N04C-UH, N04C-VL, N04C-VQ
* 2 :2TR-FE
* 4 :N04C-UH
* 5 :1BZ-FPE
* 6 :14B, 1HZ
* 7 :Except 1BZ-FPE
* 8 :1HZ
* 9 :14B
*10 :N04C-UH, N04C-VL
*12 :*13 *7, RHD *14 *7
*13 :Before Jan. 2018 Production
*14 :From Jan. 2018 Production

Air Conditioner

Cooling Fan

* 4 :N04C-UH
* 5 :1BZ-FPE
* 6 :14B, 1HZ
* 7 :Except 1BZ-FPE
* 8 :1HZ
* 9 :14B
*10 :N04C-UH, N04C-VL
*13 :Before Jan. 2018 Production
*14 :From Jan. 2018 Production
*15 :RHD *13, LHD *14

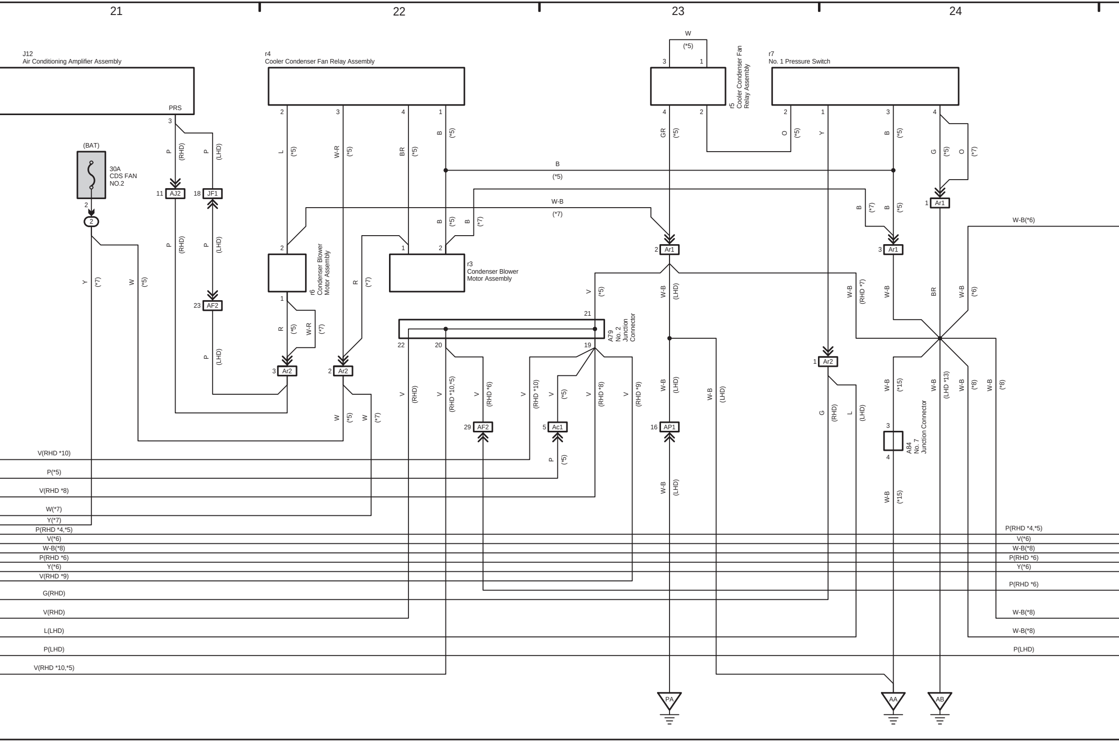
21
22
23
24
J12
Air Conditioning Amplifier Assembly
PRS
r4
Cooler Condenser Fan Relay Assembly
r5
Cooler Condenser Fan Relay Assembly
r7
No. 1 Pressure Switch
(BAT)
30A
CDS FAN
NO.2
11 AJ2
18 JF1
23 AF2
r6
Condenser Blower Motor Assembly
r3
Condenser Blower Motor Assembly
A79
No. 2
Junction Connector
3 Ar2
2 Ar2
29 AF2
5 Ac1
16 AP1
2 Ar1
3 Ar1
1 Ar1
1 Ar2
A84
No. 7
Junction Connector
W (*5)
B (*5)
W-B (*7)
W-B(*6)
V(RHD *10)
P(*5)
V(RHD *8)
W(*7)
Y(*7)
P(RHD *4,*5)
V(*6)
W-B(*8)
P(RHD *6)
Y(*6)
V(RHD *9)
G(RHD)
V(RHD)
L(LHD)
P(LHD)
V(RHD *10,*5)
PA
AA
AB

Cooling Fan

* 4 :N04C-UH
* 5 :1BZ-FPE
* 6 :14B, 1HZ
* 8 :1HZ
* 9 :14B

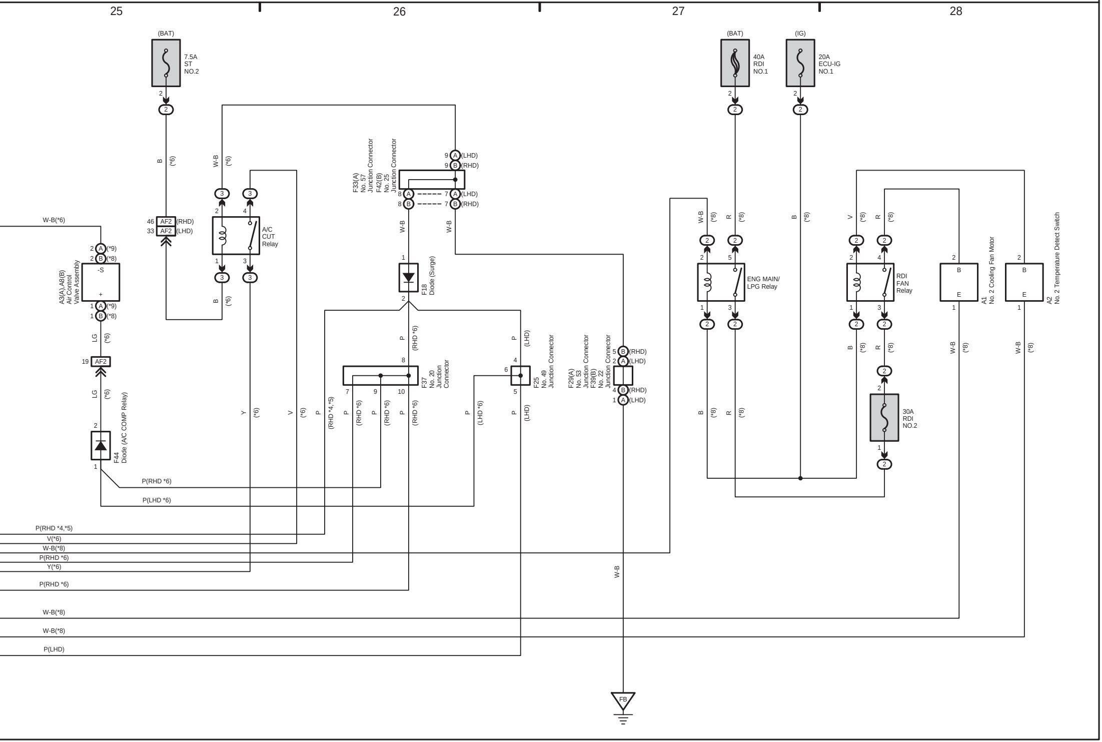
25
26
27
28
(BAT)
7.5A
ST
NO.2
(BAT)
40A
RDI
NO.1
(IG)
20A
ECU-IG
NO.1
A/C
CUT
Relay
F33(A)
No. 57
Junction Connector
F42(B)
No. 25
Junction Connector
(LHD)
(RHD)
F18
Diode (Surge)
W-B(*6)
A3(A),A8(B)
Air Control
Valve Assembly
-S
+
(*9)
(*8)
46 AF2 (RHD)
33 AF2 (LHD)
19 AF2
F44
Diode (A/C COMP Relay)
F37
No. 20
Junction
Connector
F25
No. 49
Junction Connector
F29(A)
No. 53
Junction Connector
F39(B)
No. 22
Junction Connector
ENG MAIN/
LPG Relay
RDI
FAN
Relay
30A
RDI
NO.2
A1
No. 2 Cooling Fan Motor
A2
No. 2 Temperature Detect Switch
B
E
P(RHD *6)
P(LHD *6)
P(RHD *4,*5)
V(*6)
W-B(*8)
P(RHD *6)
Y(*6)
P(RHD *6)
W-B(*8)
W-B(*8)
P(LHD)
B (*6)
W-B (*6)
LG (*6)
Y (*6)
V (*6)
P (RHD *4,*5)
P (RHD *6)
P (LHD *6)
P (LHD)
W-B
W-B (*8)
R (*8)
B (*8)
V (*8)
FB