1 COROLLA MATRIX

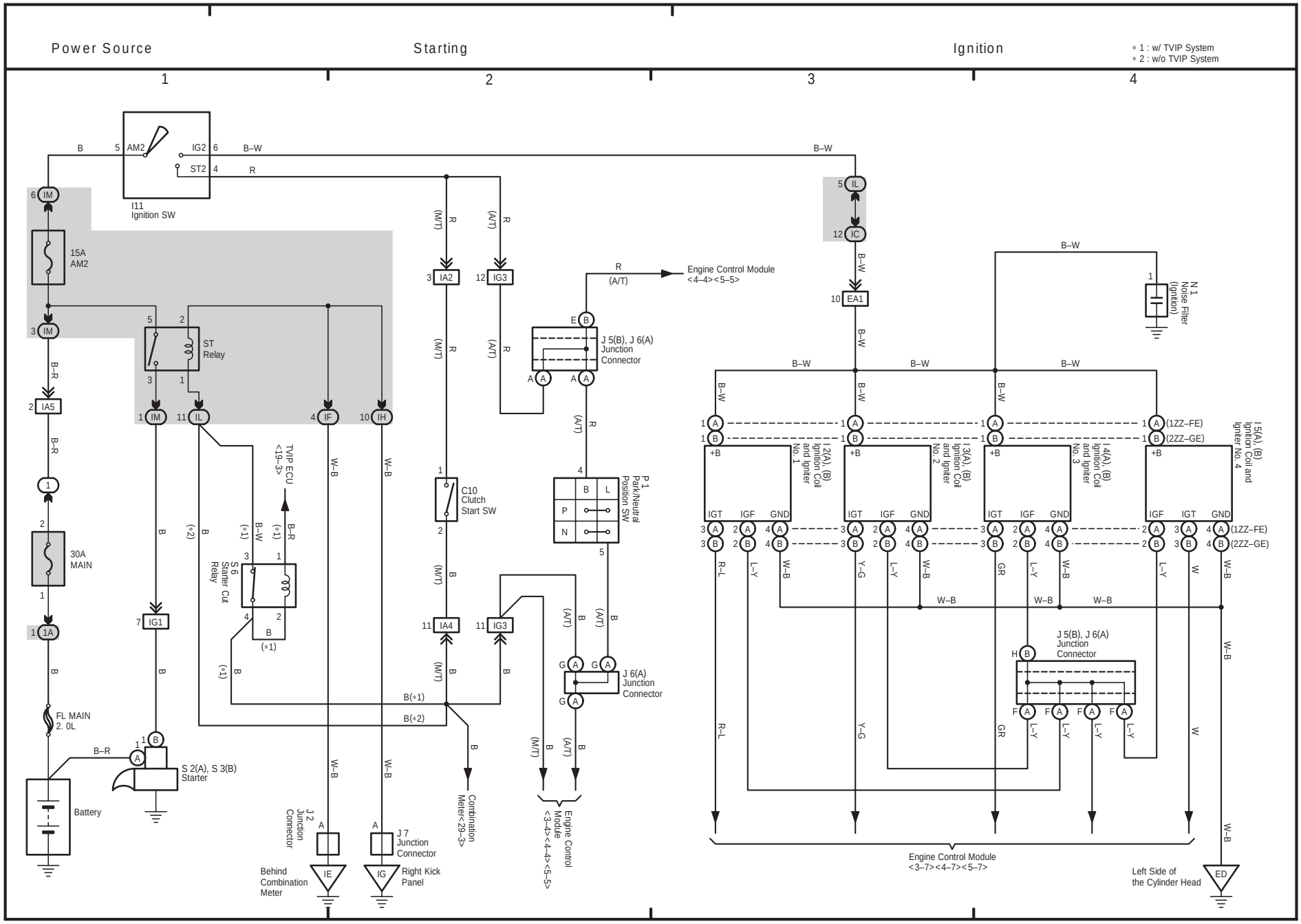

2 COROLLA MATRIX

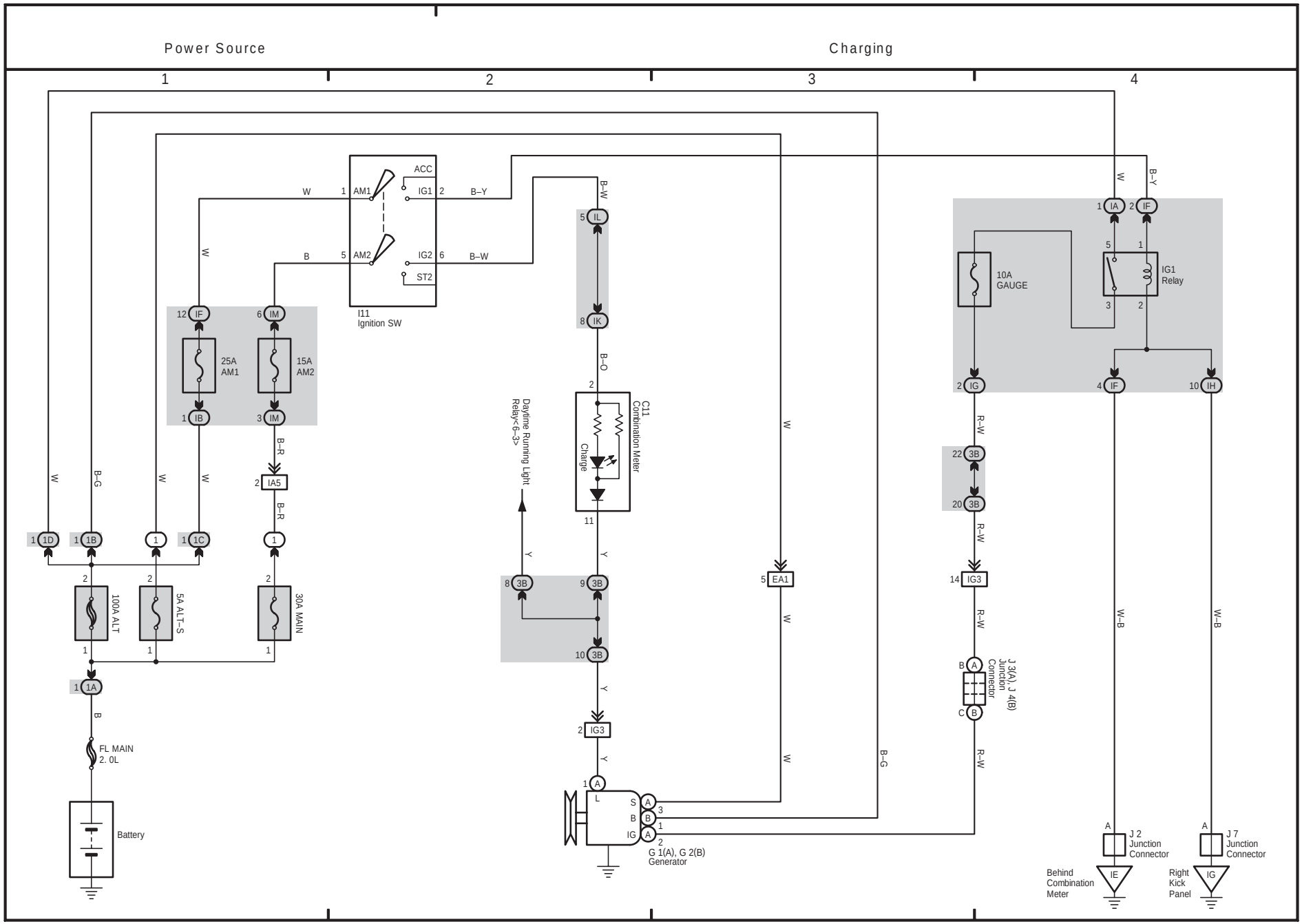

3 COROLLA MATRIX

(Cont. next page)

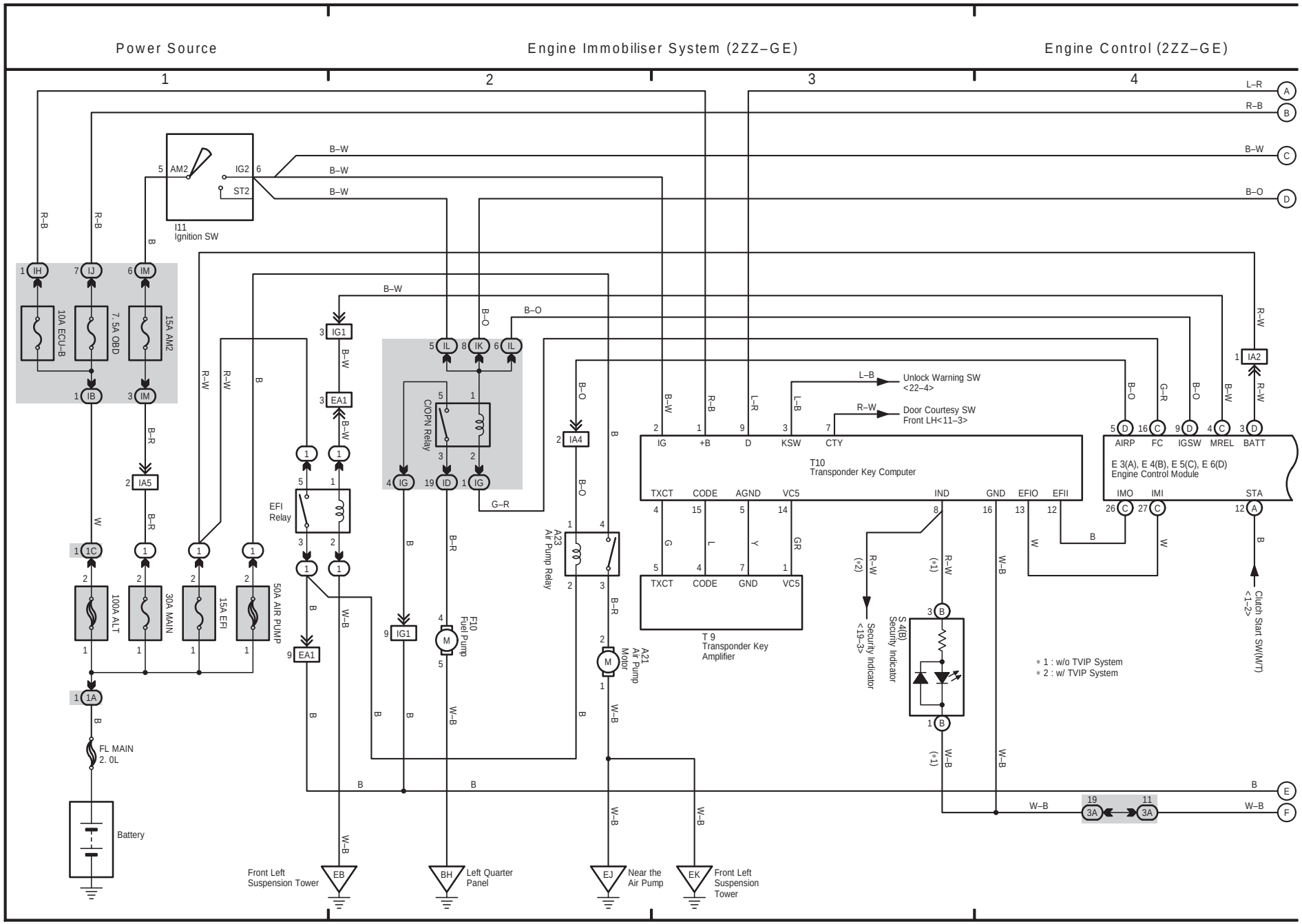

(Cont. next page)

Engine Control (2ZZ–GE)

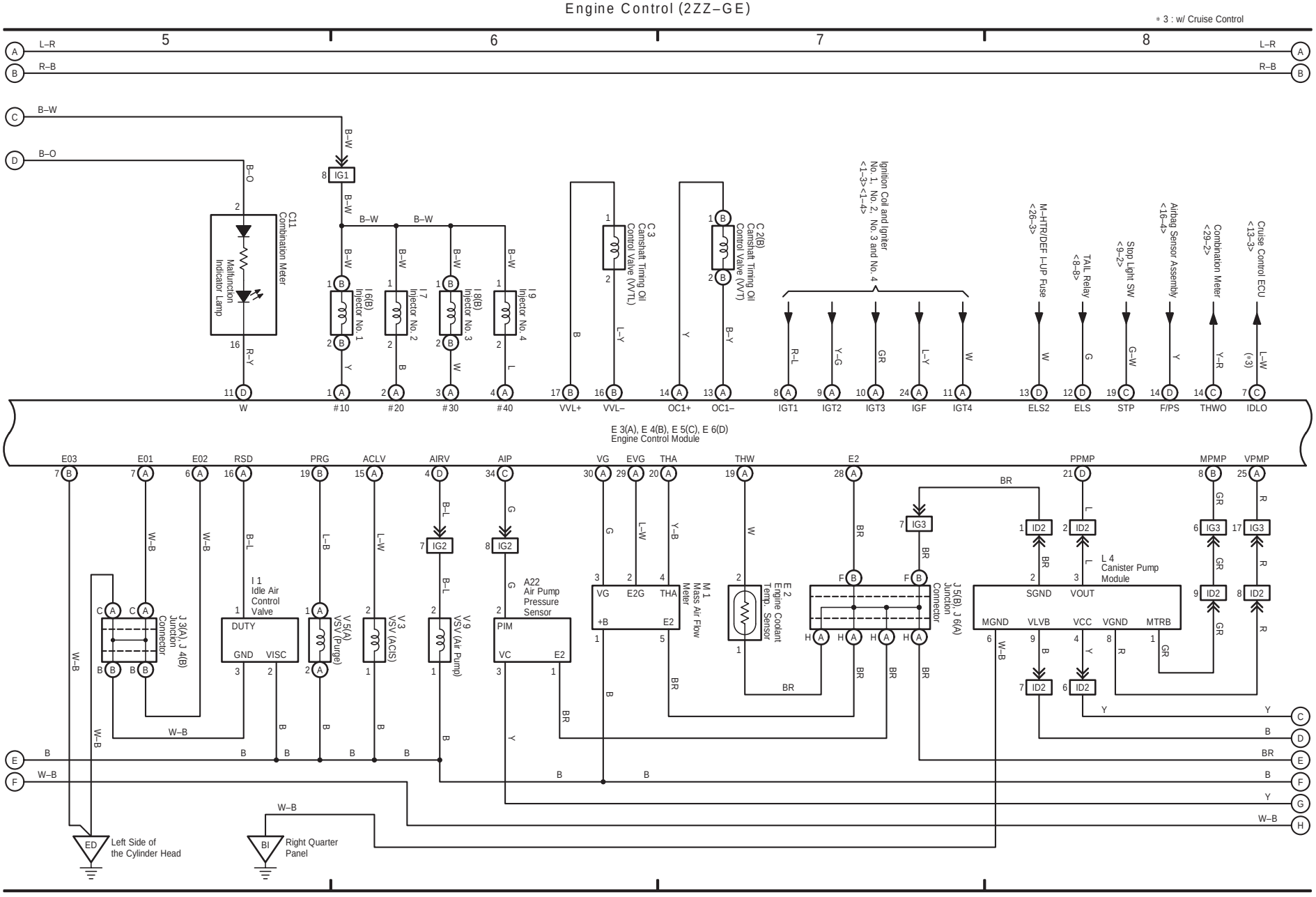

3 COROLLA MATRIX (Cont' d)

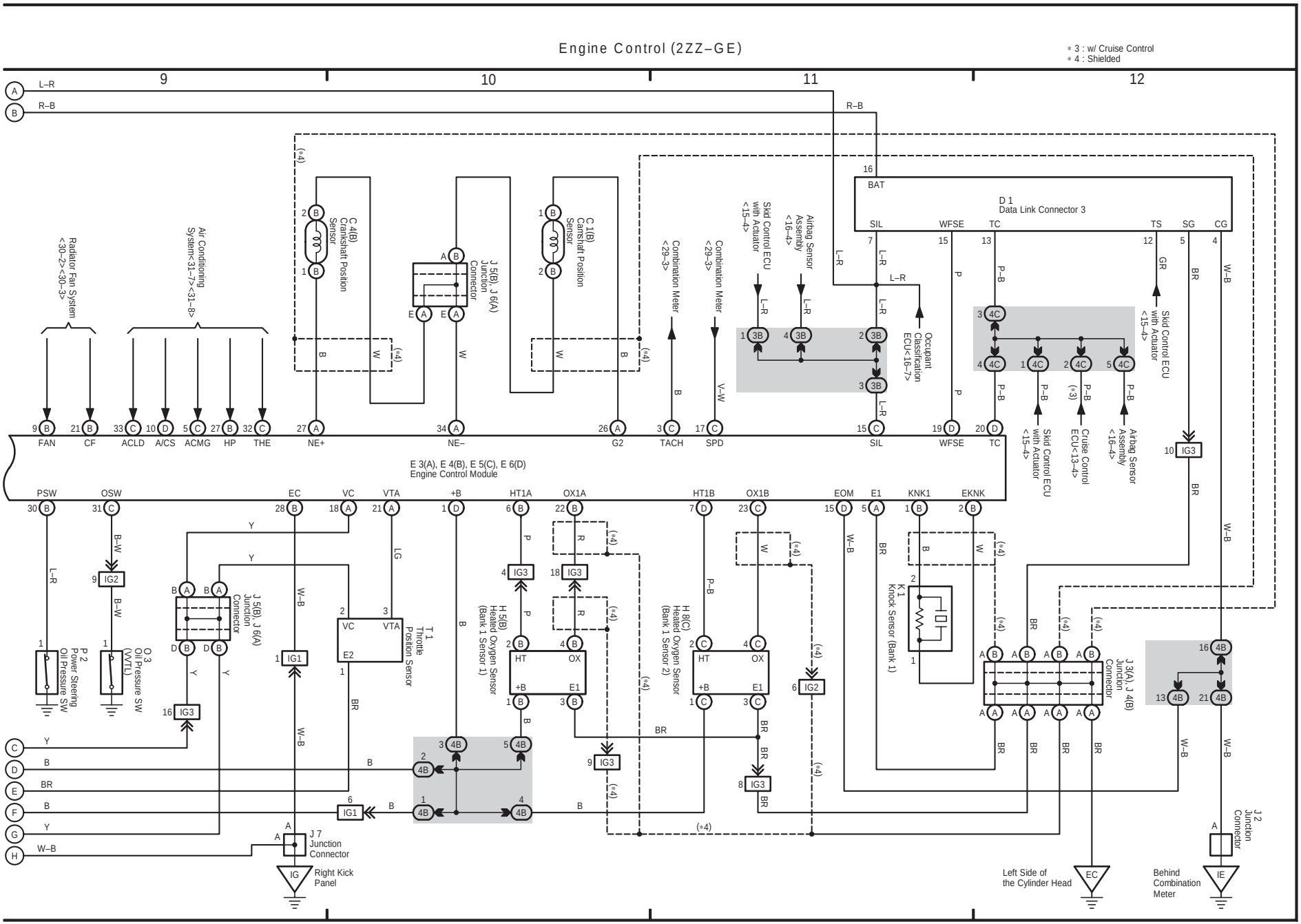

(Cont. next page)

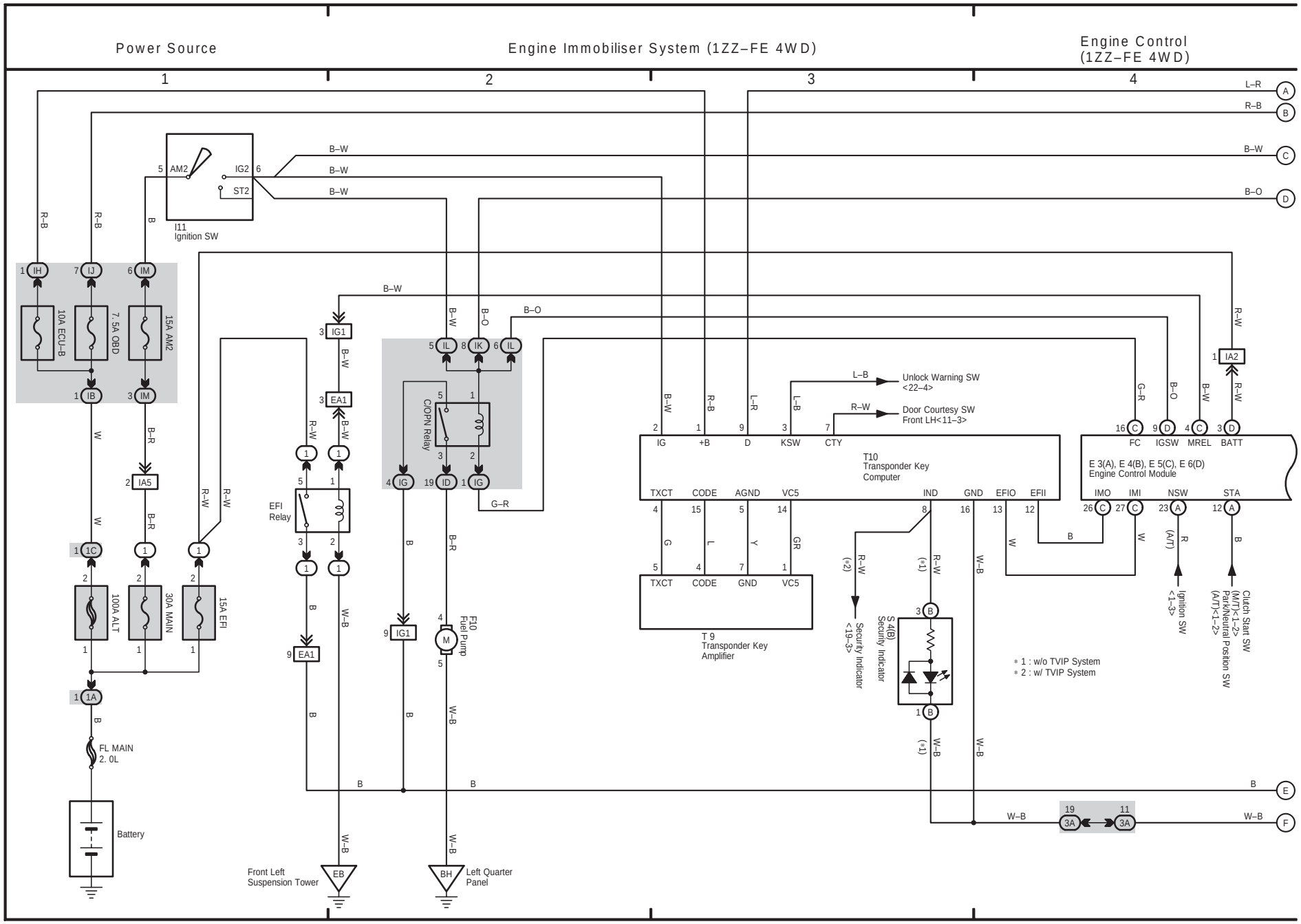

(Cont. next page)

Engine Control (1ZZ–FE 4WD)

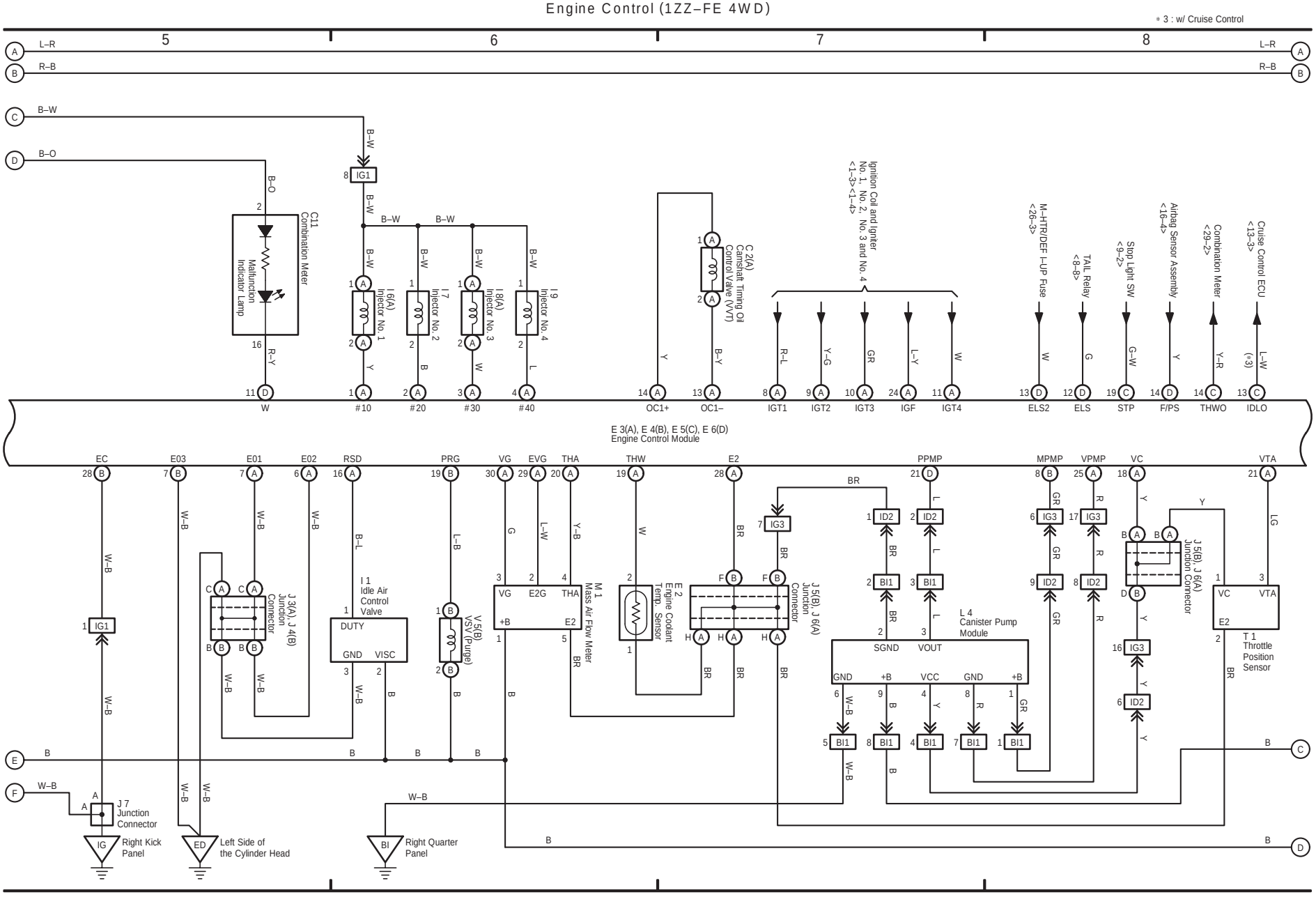

4 COROLLA MATRIX (Cont' d)

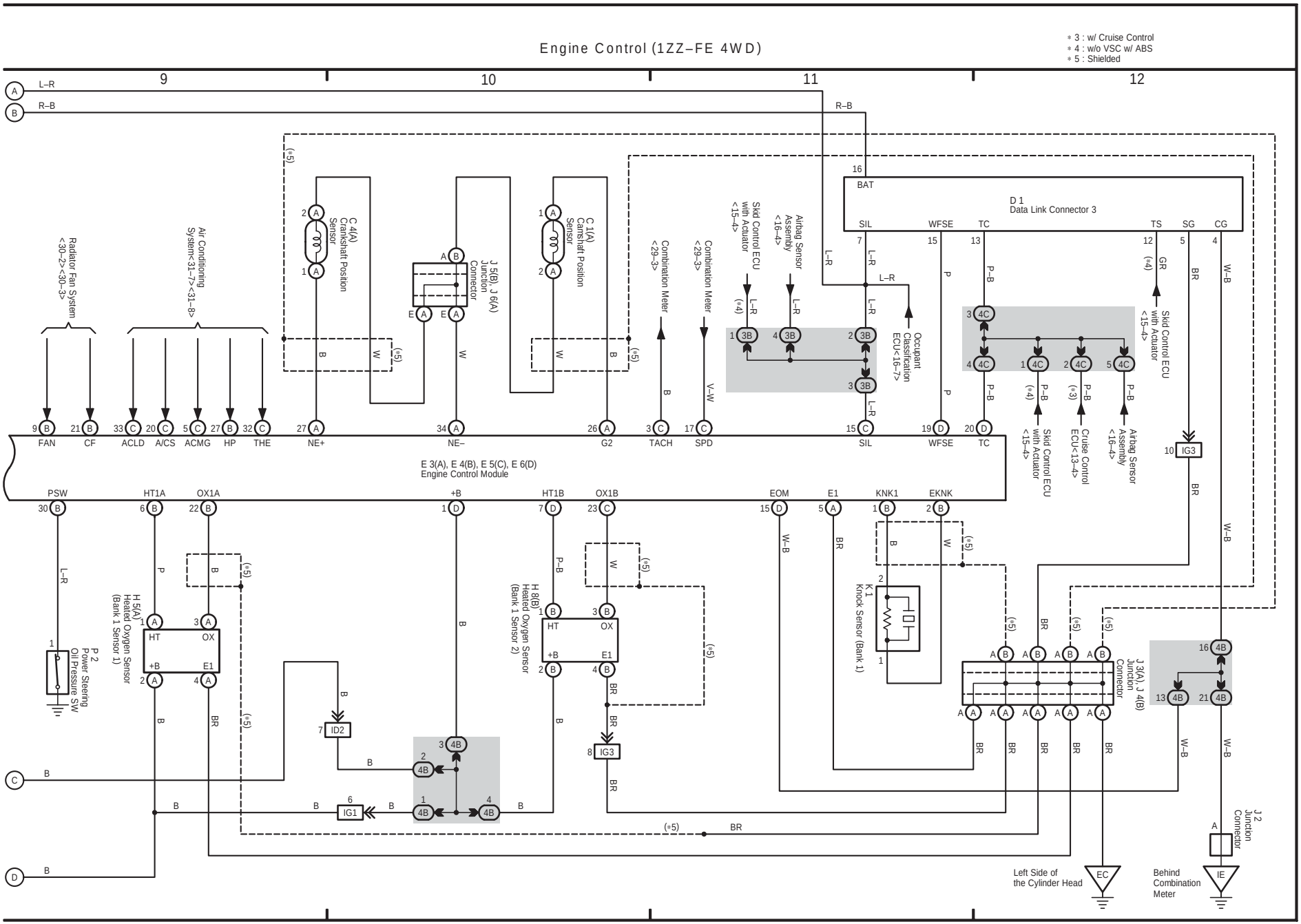

5 COROLLA MATRIX

(Cont. next page)

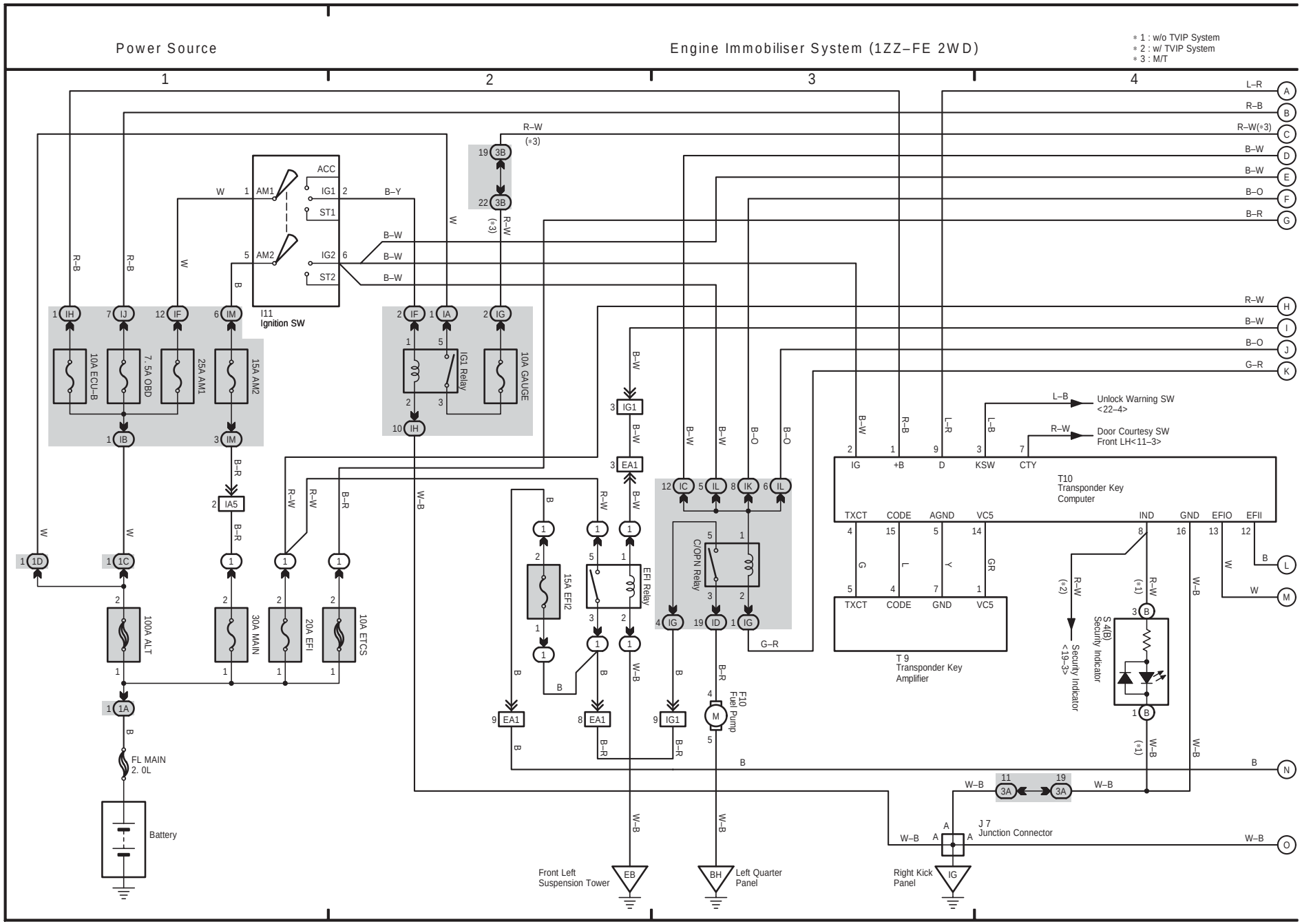

(Cont. next page)

Engine Control (1ZZ–FE 2WD)

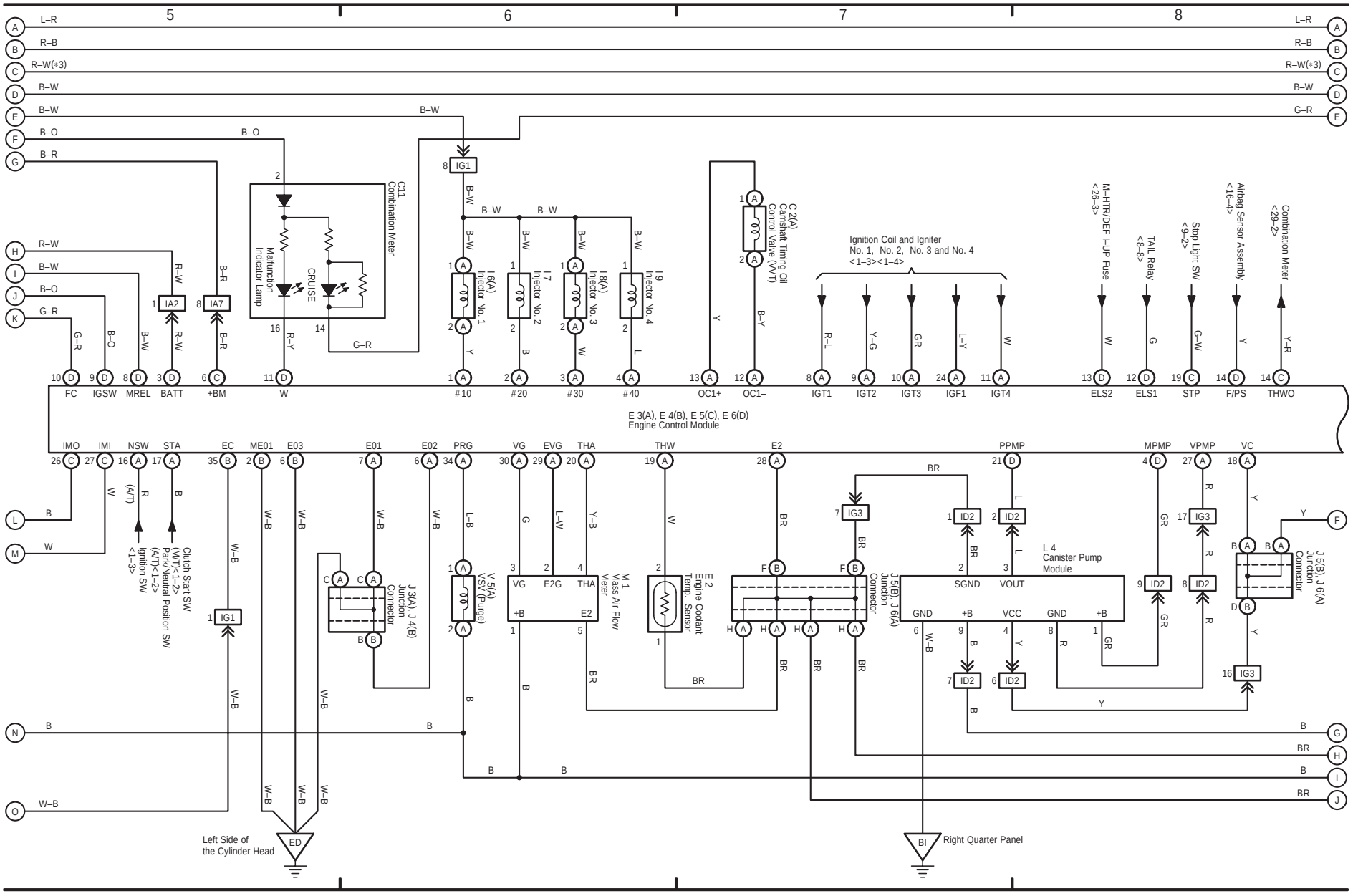

5 COROLLA MATRIX (Cont' d)

(Cont. next page)

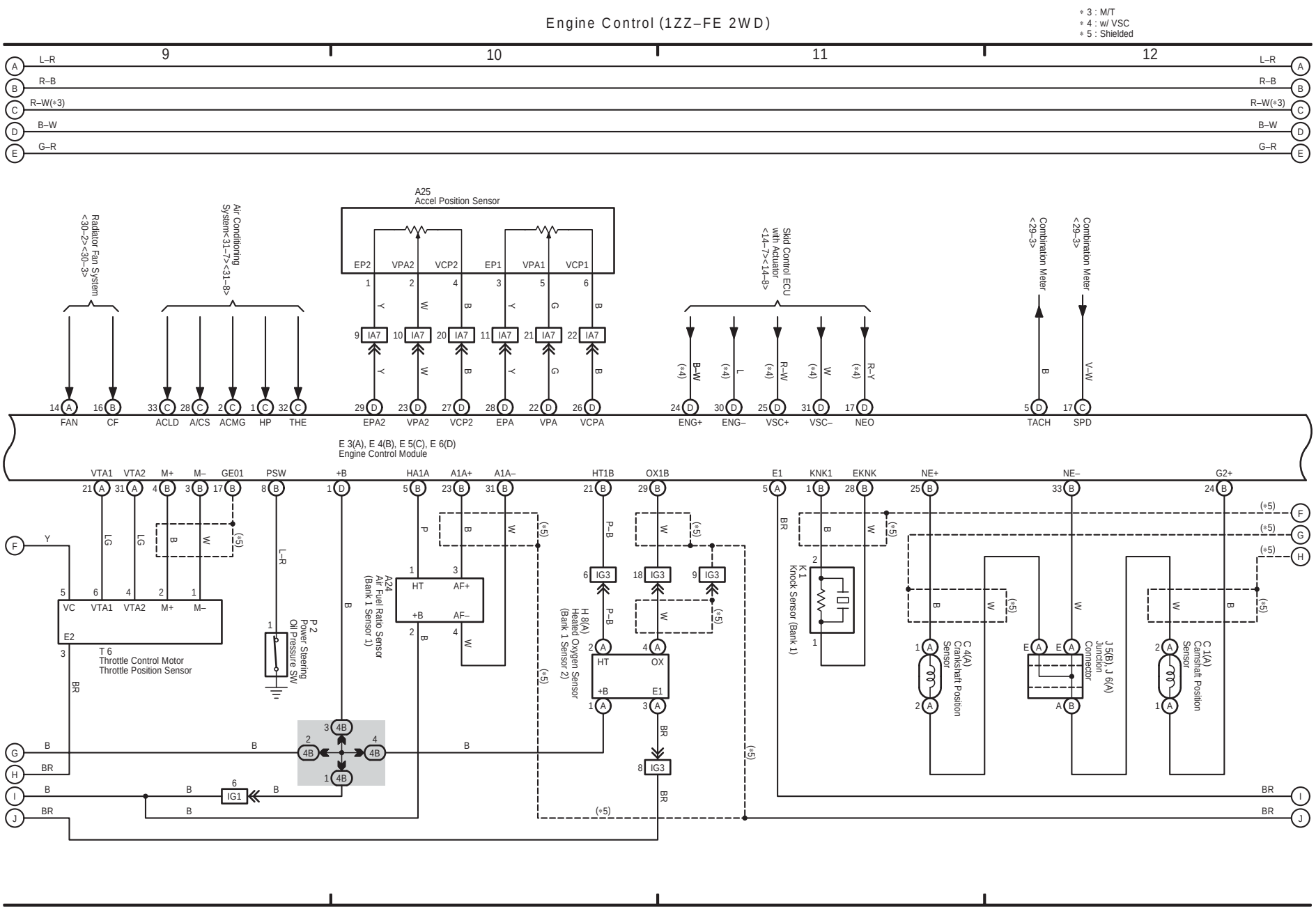

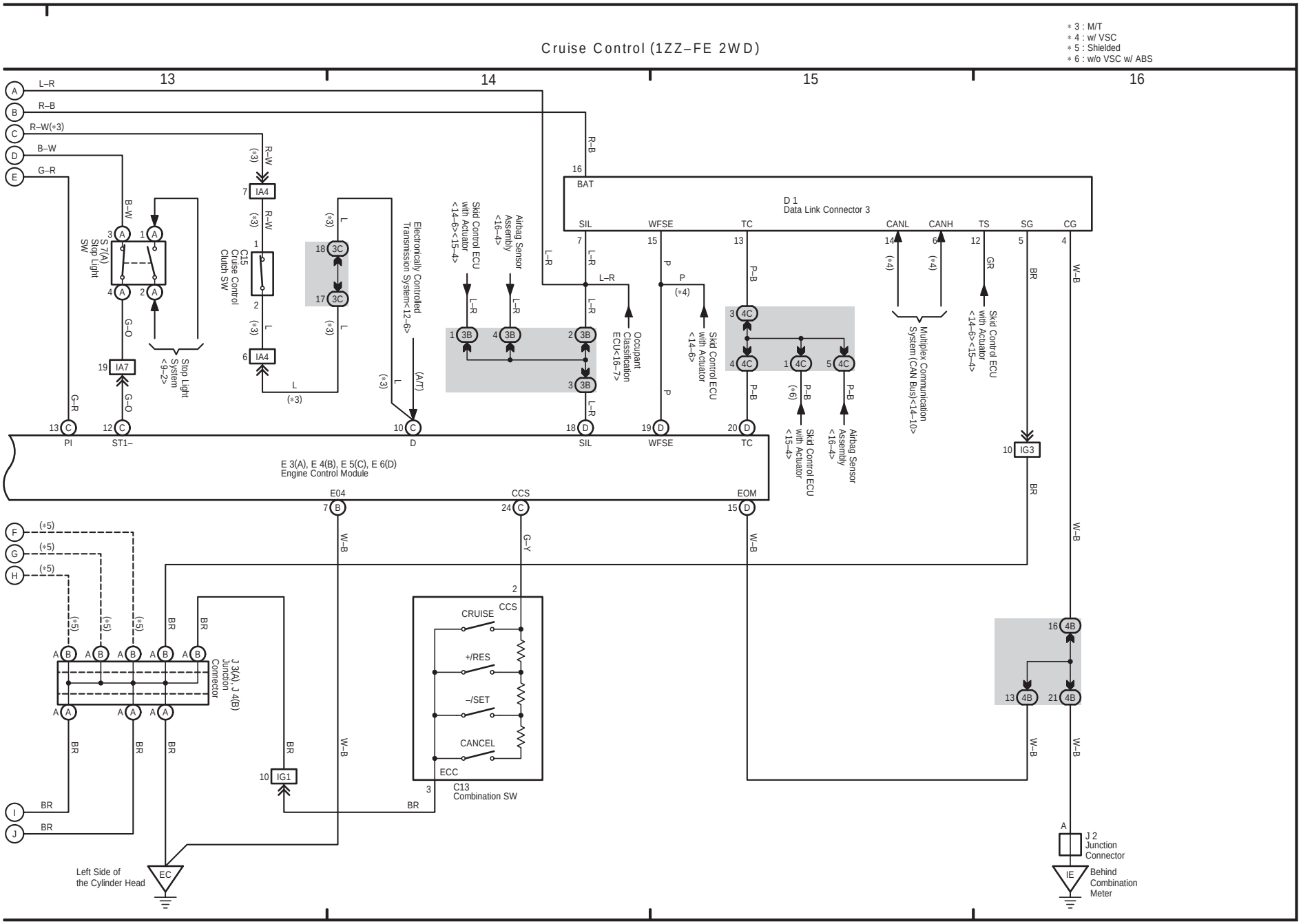
Cruise Control (1ZZ–FE 2WD)
* 3 : M/T
* 4 : w/ VSC
* 5 : Shielded
* 6 : w/o VSC w/ ABS
13
14
15
16
D 1
Data Link Connector 3
BAT
SIL
WFSE
TC
CANL
CANH
TS
SG
CG
S 7(A)
Stop Light SW
Stop Light System <9–2>
C15
Cruise Control Clutch SW
Electronically Controlled Transmission System<12–6>
Skid Control ECU with Actuator <14–6><15–4>
Airbag Sensor Assembly <16–4>
Occupant Classification ECU<16–7>
Skid Control ECU with Actuator <14–6>
Multiplex Communication System (CAN Bus)<14–10>
Skid Control ECU with Actuator <14–6><15–4>
Skid Control ECU with Actuator <15–4>
Airbag Sensor Assembly <16–4>
E 3(A), E 4(B), E 5(C), E 6(D)
Engine Control Module
PI
ST1–
D
SIL
WFSE
TC
E04
CCS
EOM
J 3(A), J 4(B)
Junction Connector
CRUISE
+/RES
–/SET
CANCEL
ECC
C13
Combination SW
Left Side of the Cylinder Head
EC
J 2
Junction Connector
IE
Behind Combination Meter

6 COROLLA MATRIX

(Cont. next page)

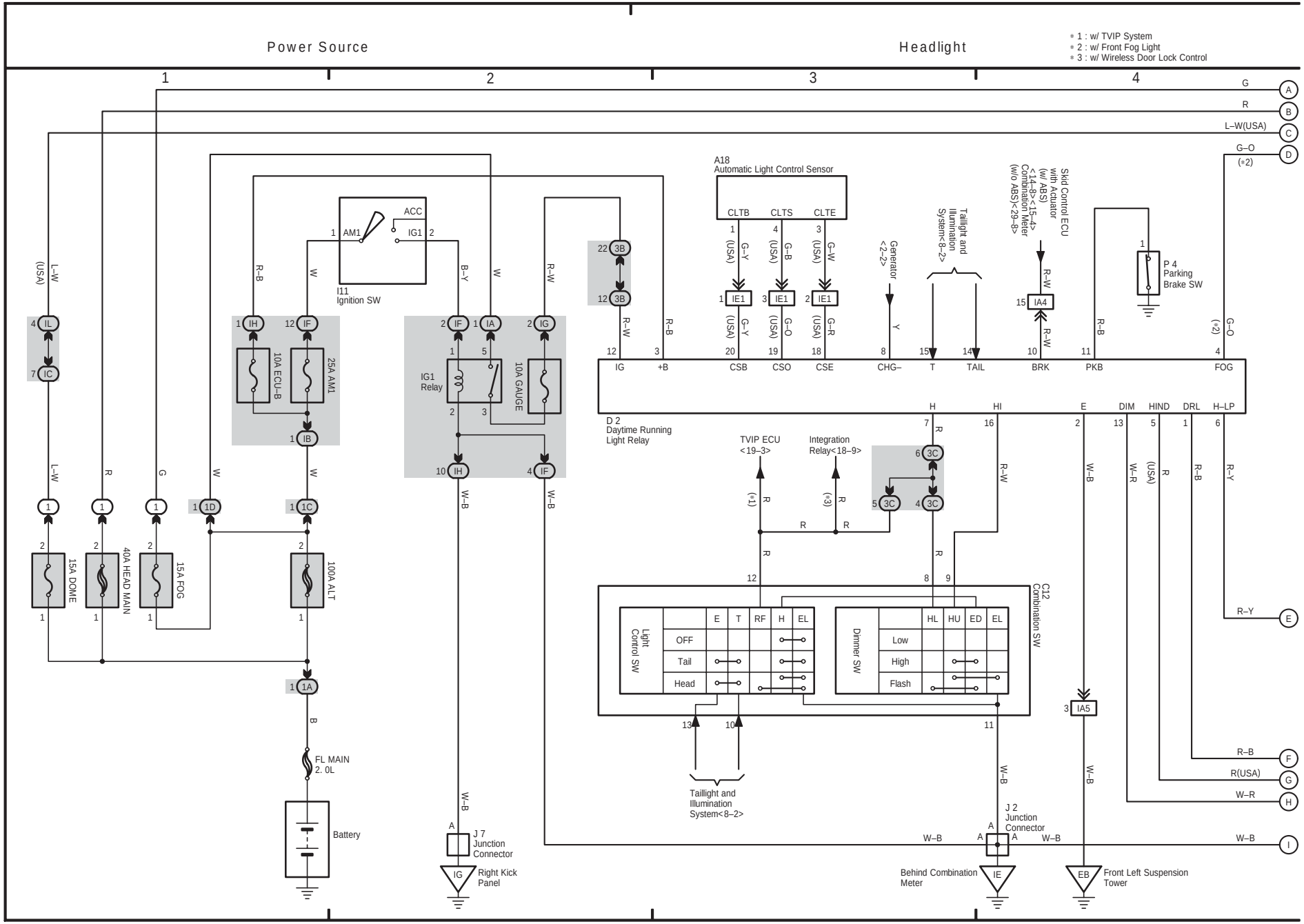

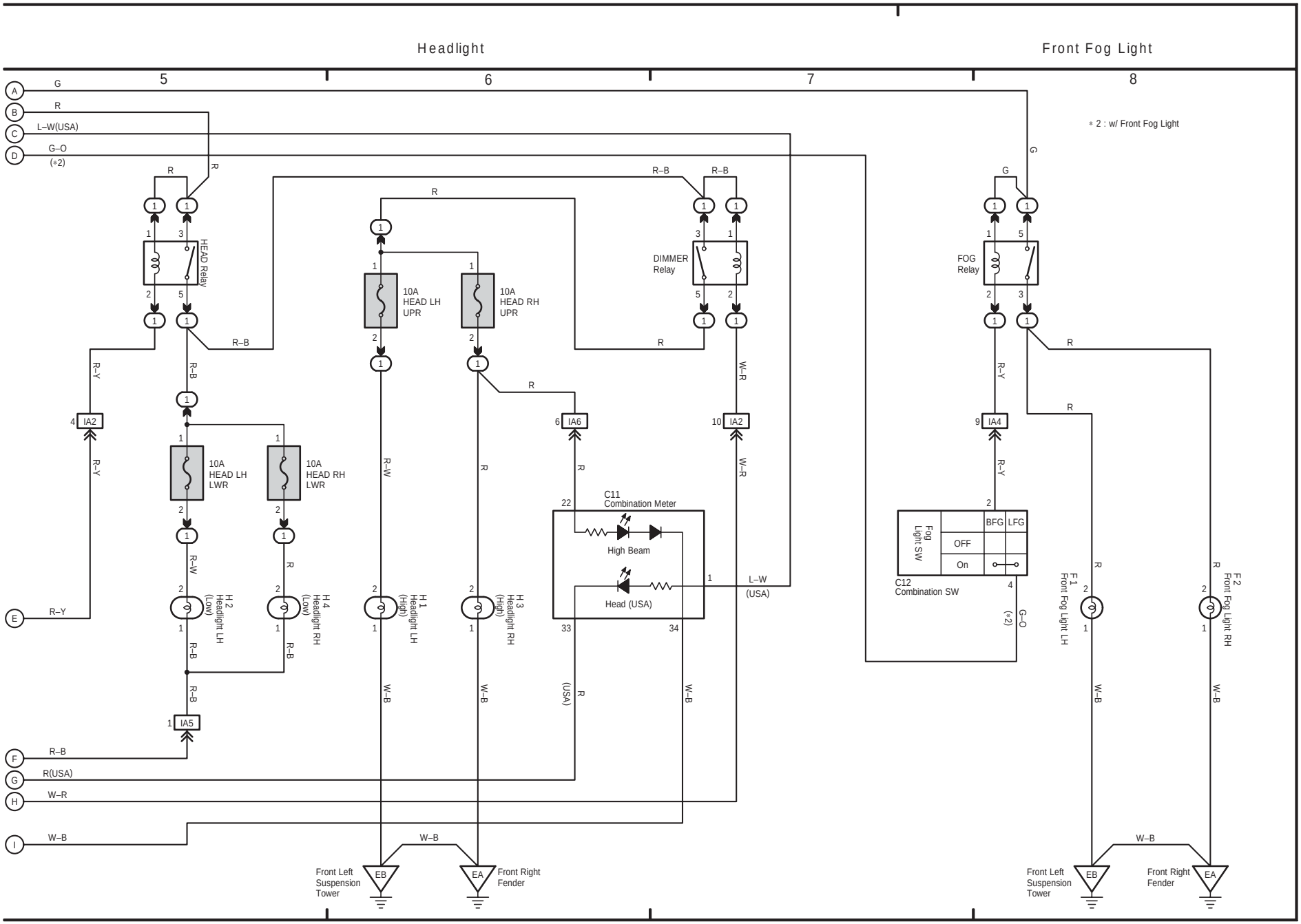
Headlight
Front Fog Light
5
6
7
8
A
B
C
D
E
F
G
H
I
G
R
L–W(USA)
G–O
(*2)
* 2 : w/ Front Fog Light
HEAD Relay
10A
HEAD LH
UPR
10A
HEAD RH
UPR
DIMMER
Relay
FOG
Relay
10A
HEAD LH
LWR
10A
HEAD RH
LWR
IA2
IA5
IA6
IA4
R–Y
R–B
R–W
W–R
W–B
R(USA)
H 2
Headlight LH
(Low)
H 4
Headlight RH
(Low)
H 1
Headlight LH
(High)
H 3
Headlight RH
(High)
C11
Combination Meter
High Beam
Head (USA)
L–W
(USA)
Fog
Light SW
BFG
LFG
OFF
On
C12
Combination SW
F 1
Front Fog Light LH
F 2
Front Fog Light RH
Front Left
Suspension
Tower
EB
EA
Front Right
Fender

7 COROLLA MATRIX

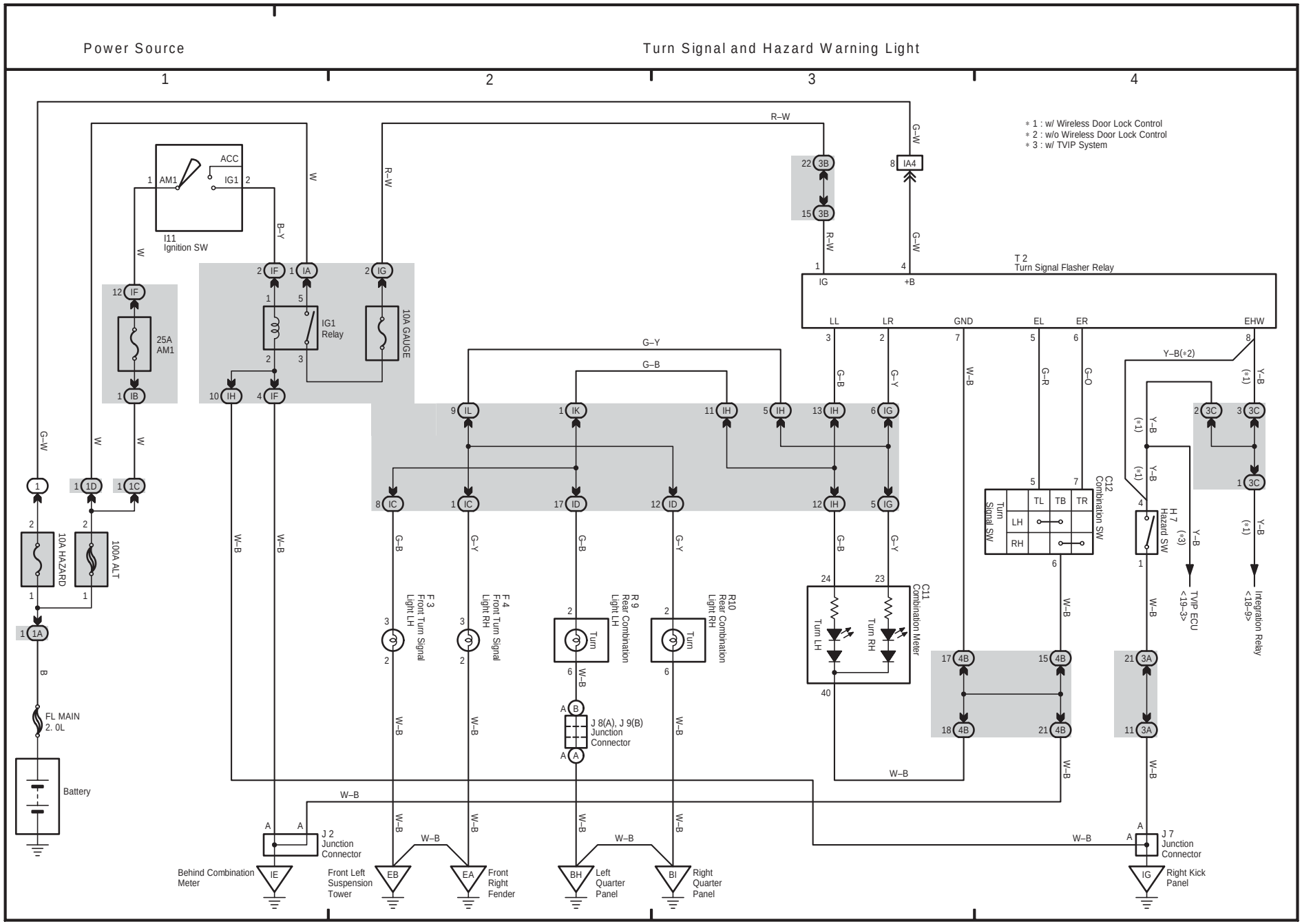

8 COROLLA MATRIX

(Cont. next page)

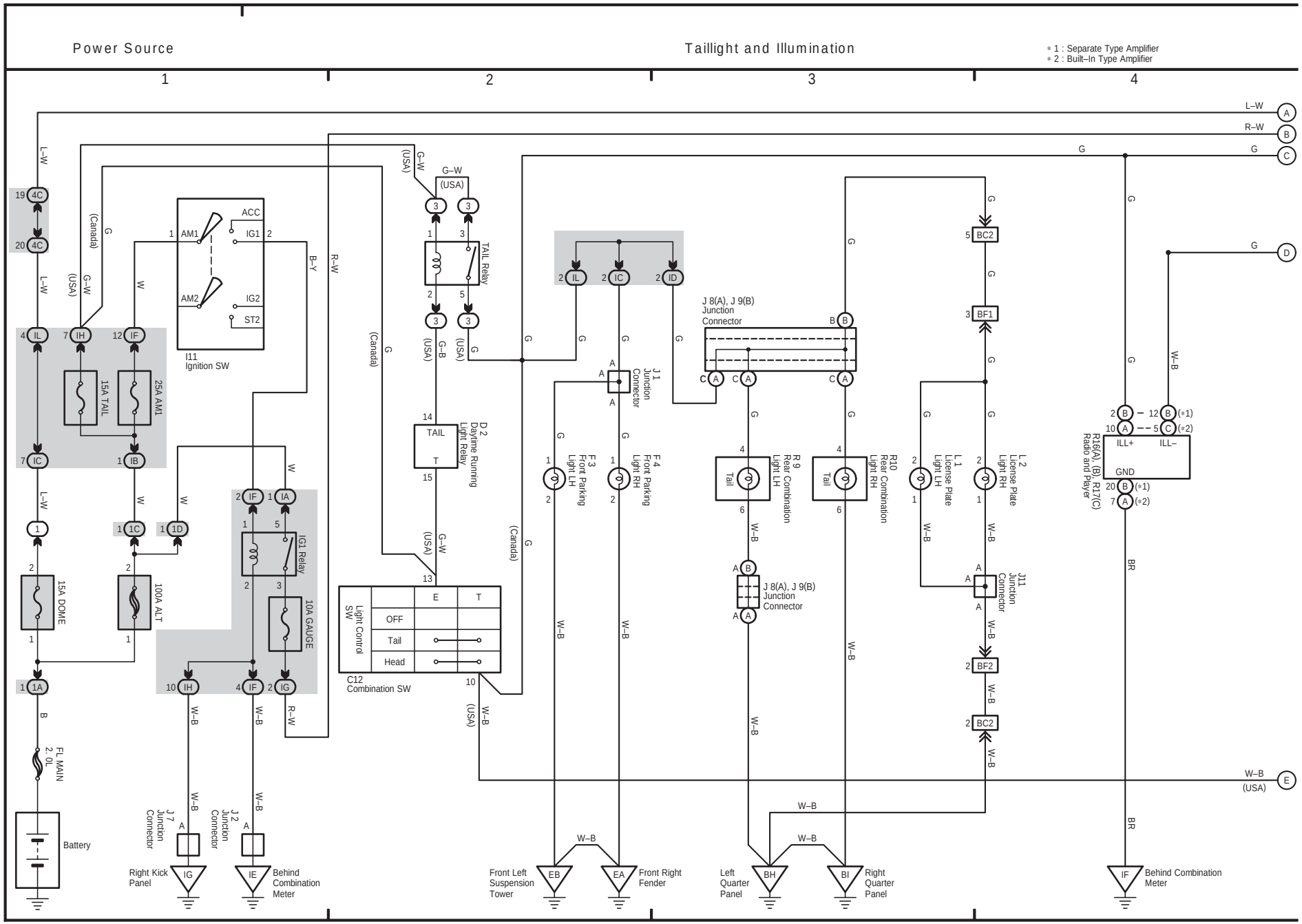

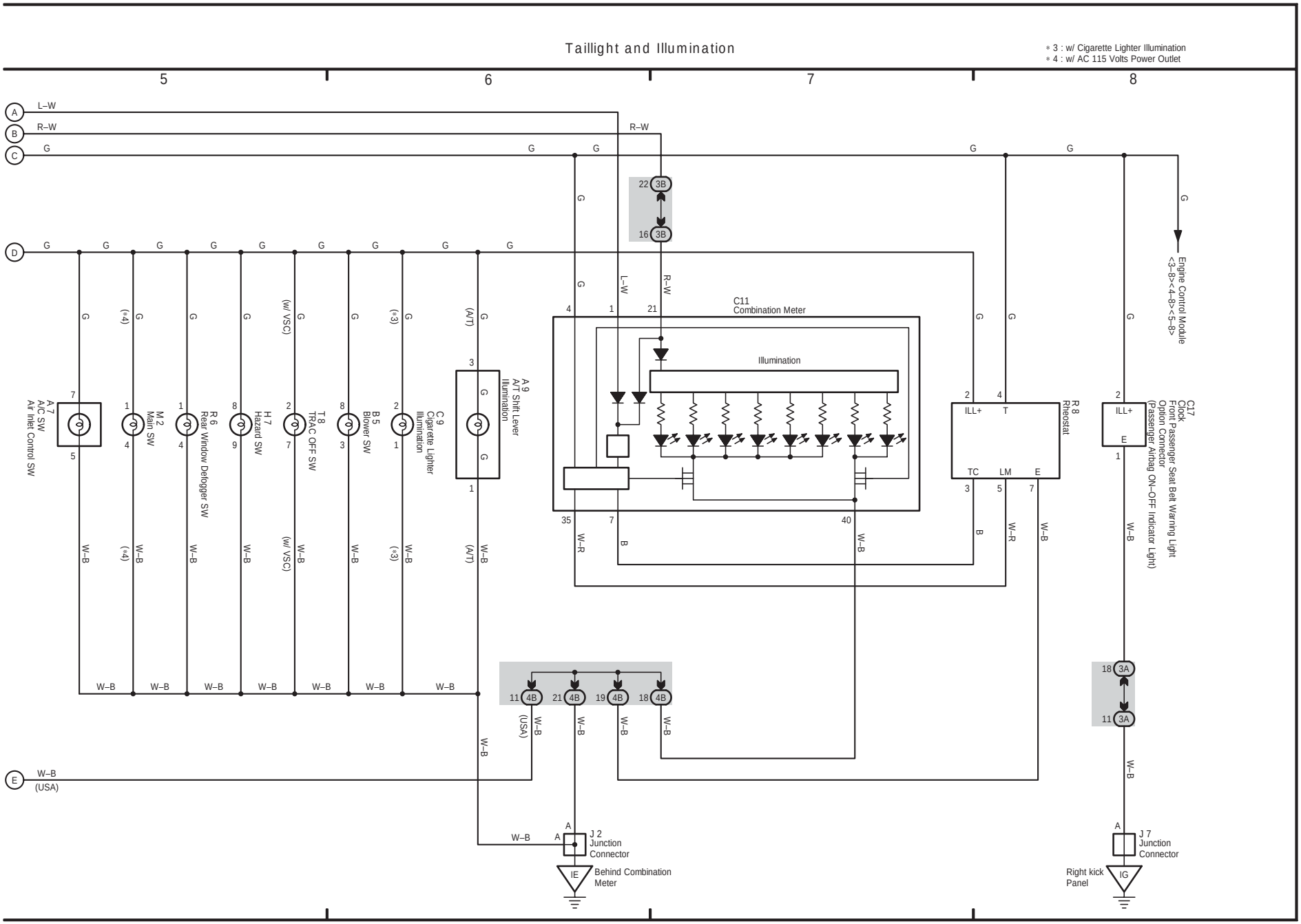
Taillight and Illumination
* 3 : w/ Cigarette Lighter Illumination
* 4 : w/ AC 115 Volts Power Outlet
5
6
7
8
L–W
R–W
G
W–B
B
Engine Control Module
<3–8><4–8><5–8>
C11
Combination Meter
Illumination
A 7
A/C SW
Air Inlet Control SW
M 2
Main SW
R 6
Rear Window Defogger SW
H 7
Hazard SW
T 8
TRAC OFF SW
B 5
Blower SW
C 9
Cigarette Lighter
Illumination
A 9
A/T Shift Lever
Illumination
R 8
Rheostat
C17
Clock
Front Passenger Seat Belt Warning Light
Option Connector
(Passenger Airbag ON–OFF Indicator Light)
(w/ VSC)
(A/T)
(*3)
(*4)
(USA)
ILL+
T
TC
LM
E
J 2
Junction
Connector
Behind Combination
Meter
J 7
Junction
Connector
Right kick
Panel

9 COROLLA MATRIX

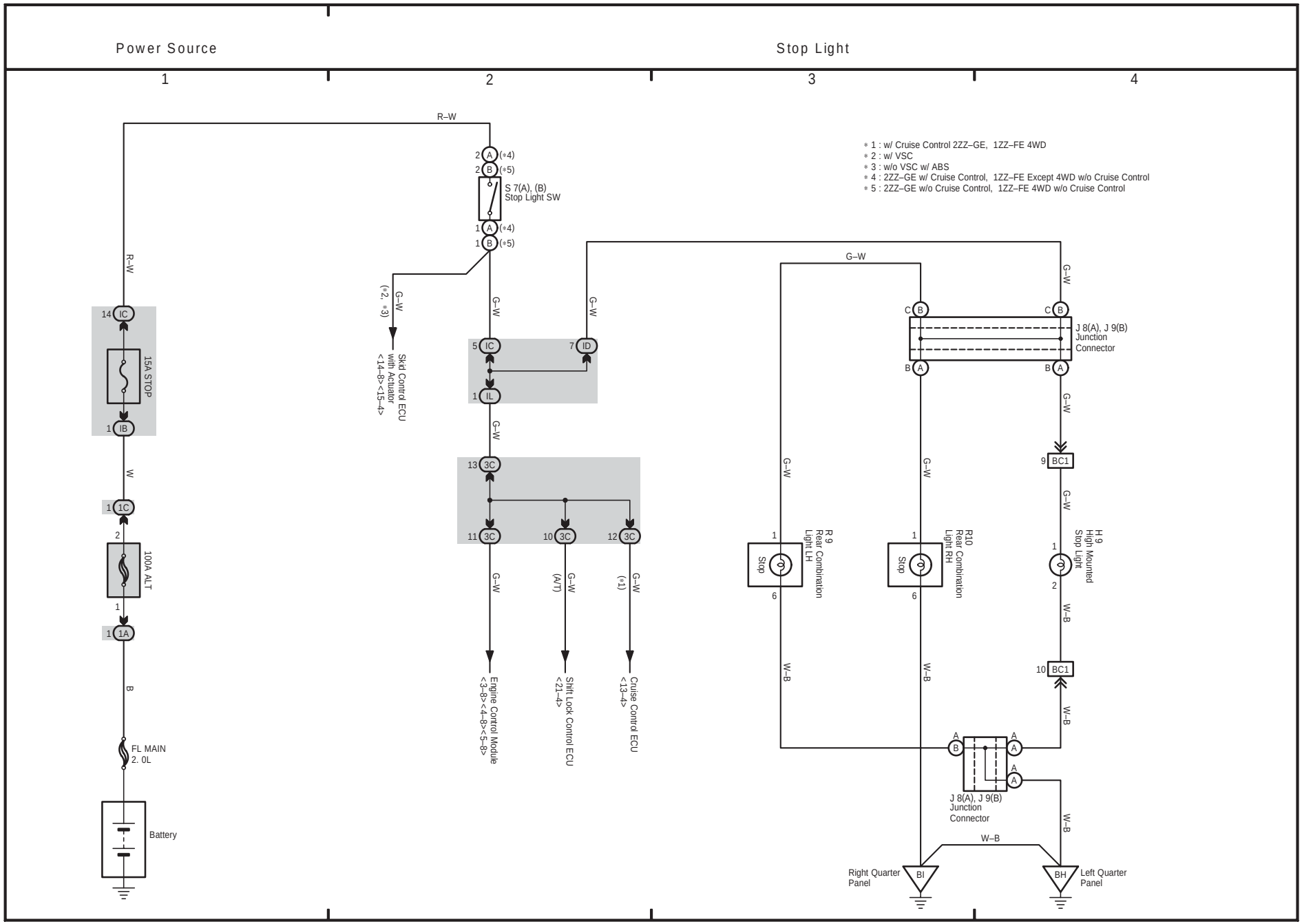

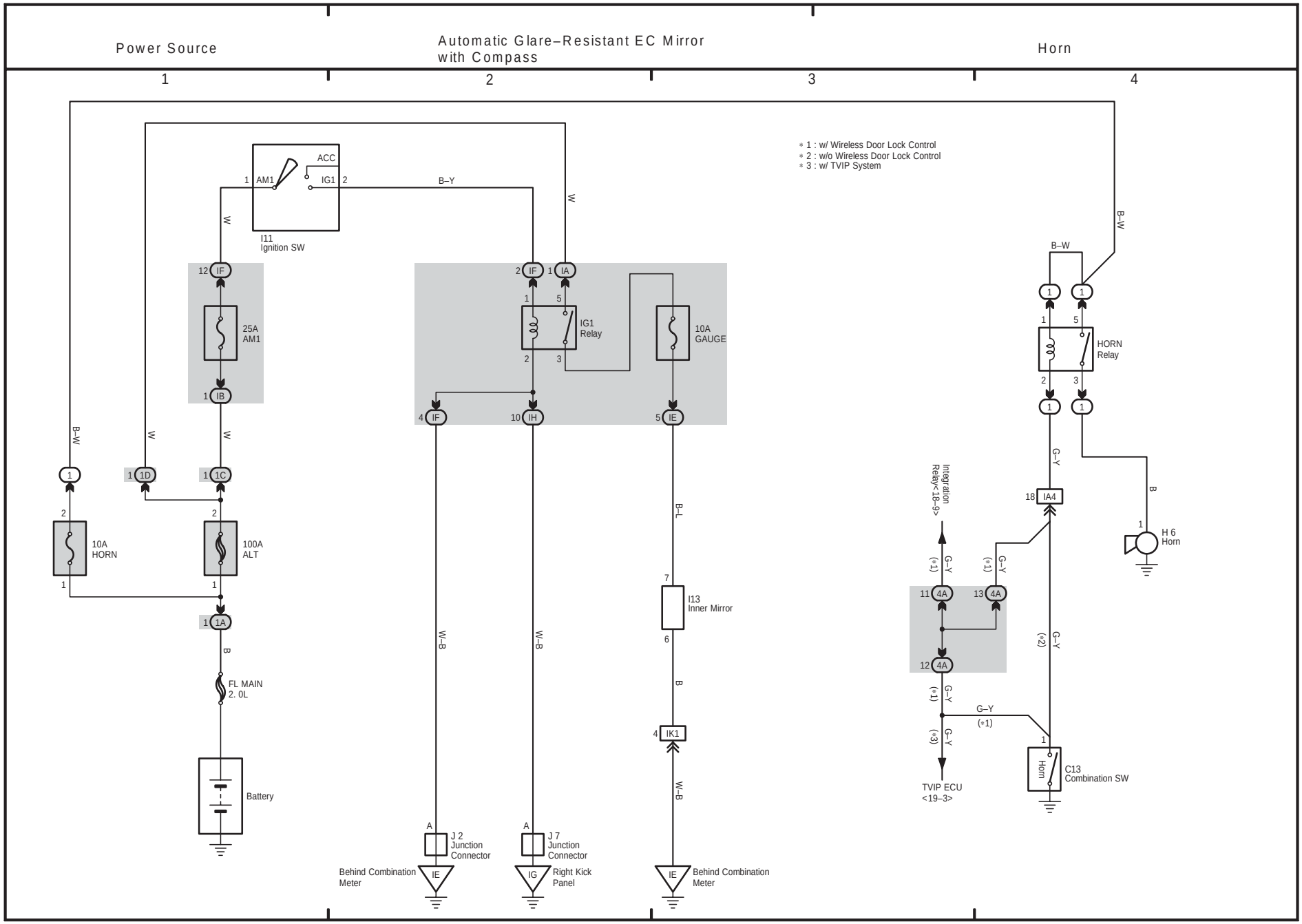
Power Source
Automatic Glare–Resistant EC Mirror with Compass
Horn
1
2
3
4
* 1 : w/ Wireless Door Lock Control
* 2 : w/o Wireless Door Lock Control
* 3 : w/ TVIP System
ACC
AM1
IG1
B–Y
W
I11
Ignition SW
IF
IA
25A
AM1
IB
IG1
Relay
10A
GAUGE
IE
IH
1D
1C
1A
10A
HORN
100A
ALT
B–W
B–L
I13
Inner Mirror
IK1
FL MAIN
2. 0L
B
Battery
W–B
J 2
Junction
Connector
J 7
Junction
Connector
Behind Combination Meter
IG
Right Kick Panel
HORN
Relay
G–Y
IA4
H 6
Horn
Integration Relay<18–9>
4A
(*1)
(*2)
(*3)
TVIP ECU
<19–3>
C13
Combination SW
Horn

11 COROLLA MATRIX

(Cont. next page)

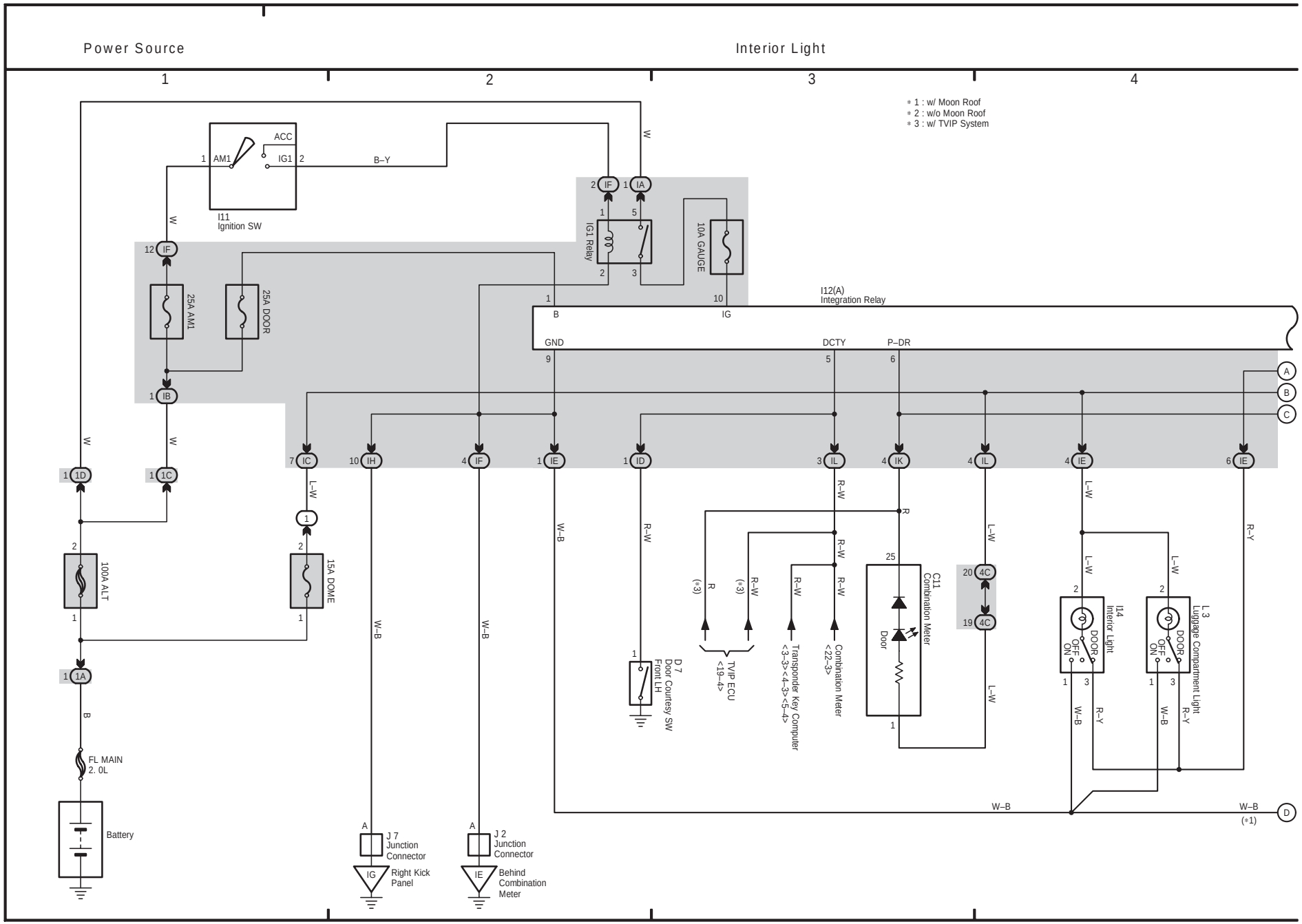

Interior Light

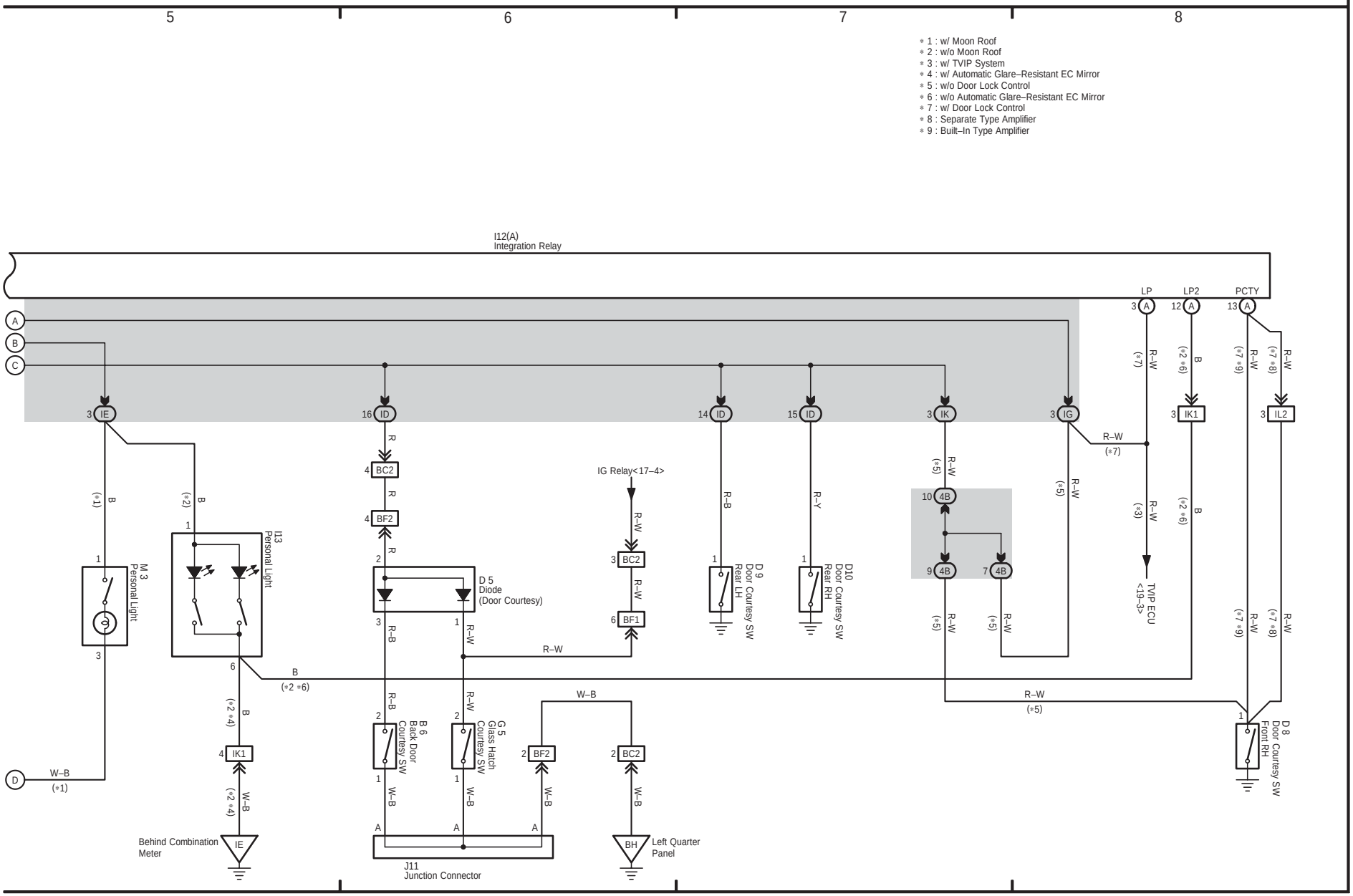

12 COROLLA MATRIX

(Cont. next page)

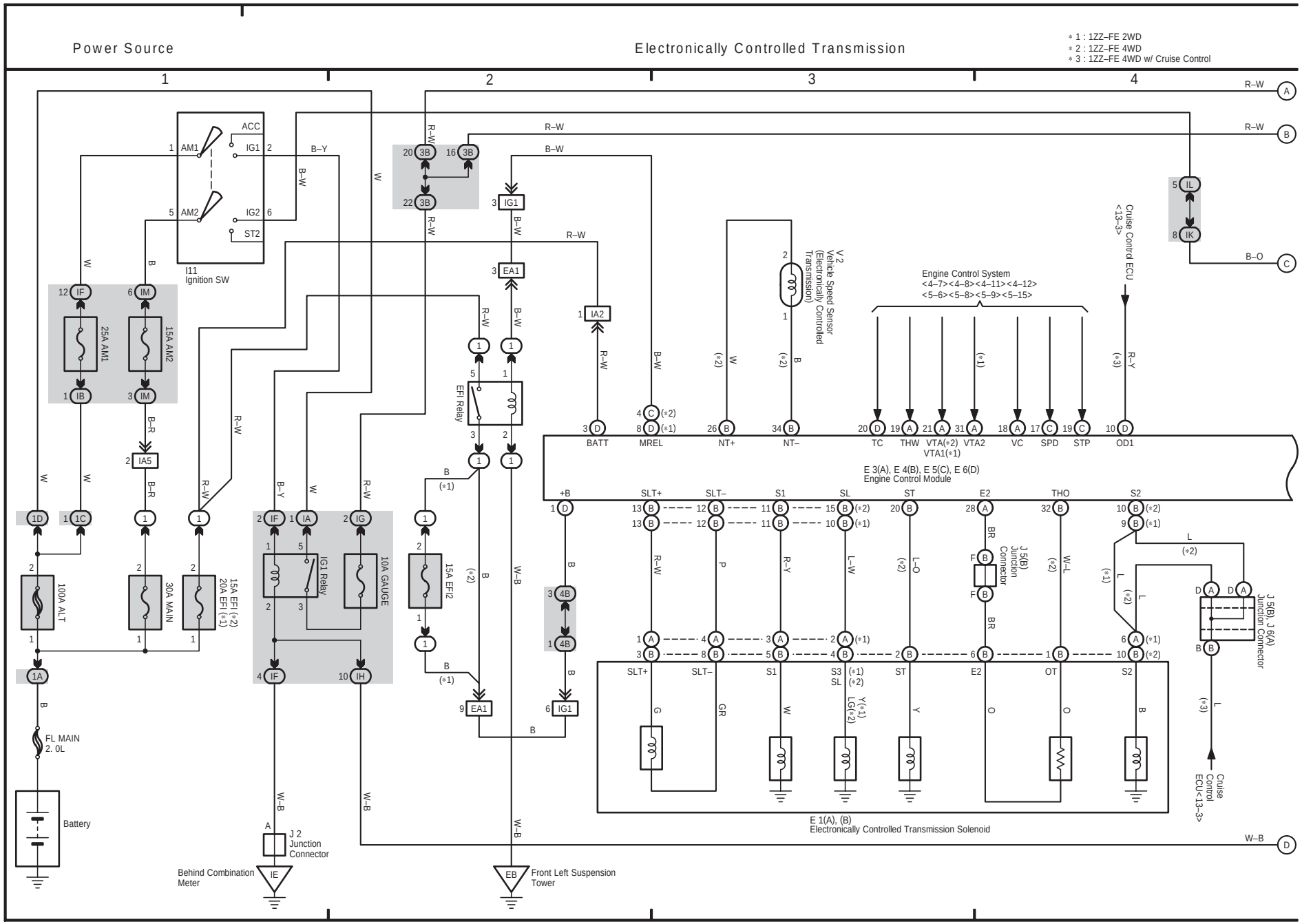

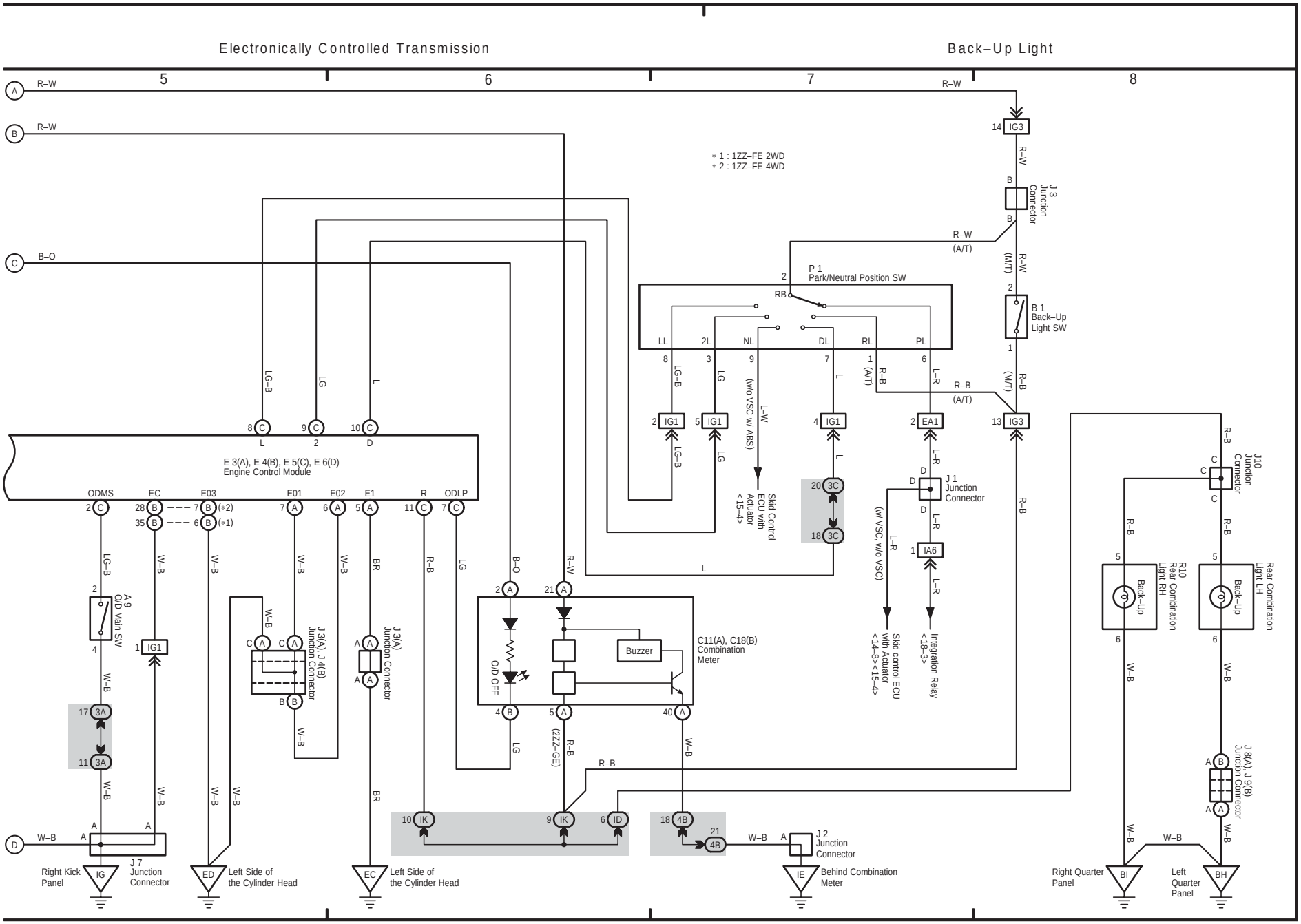
Electronically Controlled Transmission
Back–Up Light
5
6
7
8
* 1 : 1ZZ–FE 2WD
* 2 : 1ZZ–FE 4WD
E 3(A), E 4(B), E 5(C), E 6(D)
Engine Control Module
ODMS
EC
E03
E01
E02
E1
R
ODLP
A 9
O/D Main SW
J 3(A), J 4(B)
Junction Connector
J 3(A)
Junction Connector
O/D OFF
Buzzer
C11(A), C18(B)
Combination
Meter
Skid Control
ECU with
Actuator
<15–4>
(w/o VSC w/ ABS)
(w/ VSC, w/o VSC)
Skid control ECU
with Actuator
<14–8><15–4>
Integration Relay
<18–3>
P 1
Park/Neutral Position SW
B 1
Back–Up
Light SW
J 3
Junction
Connector
J 1
Junction
Connector
J 2
Junction
Connector
J 7
Junction
Connector
J 8(A), J 9(B)
Junction Connector
J10
Junction
Connector
R10
Rear Combination
Light RH
Rear Combination
Light LH
Back–Up
Right Kick
Panel
Left Side of
the Cylinder Head
Behind Combination
Meter
Right Quarter
Panel
Left
Quarter
Panel
(2ZZ–GE)
(A/T)
(M/T)

13 COROLLA MATRIX

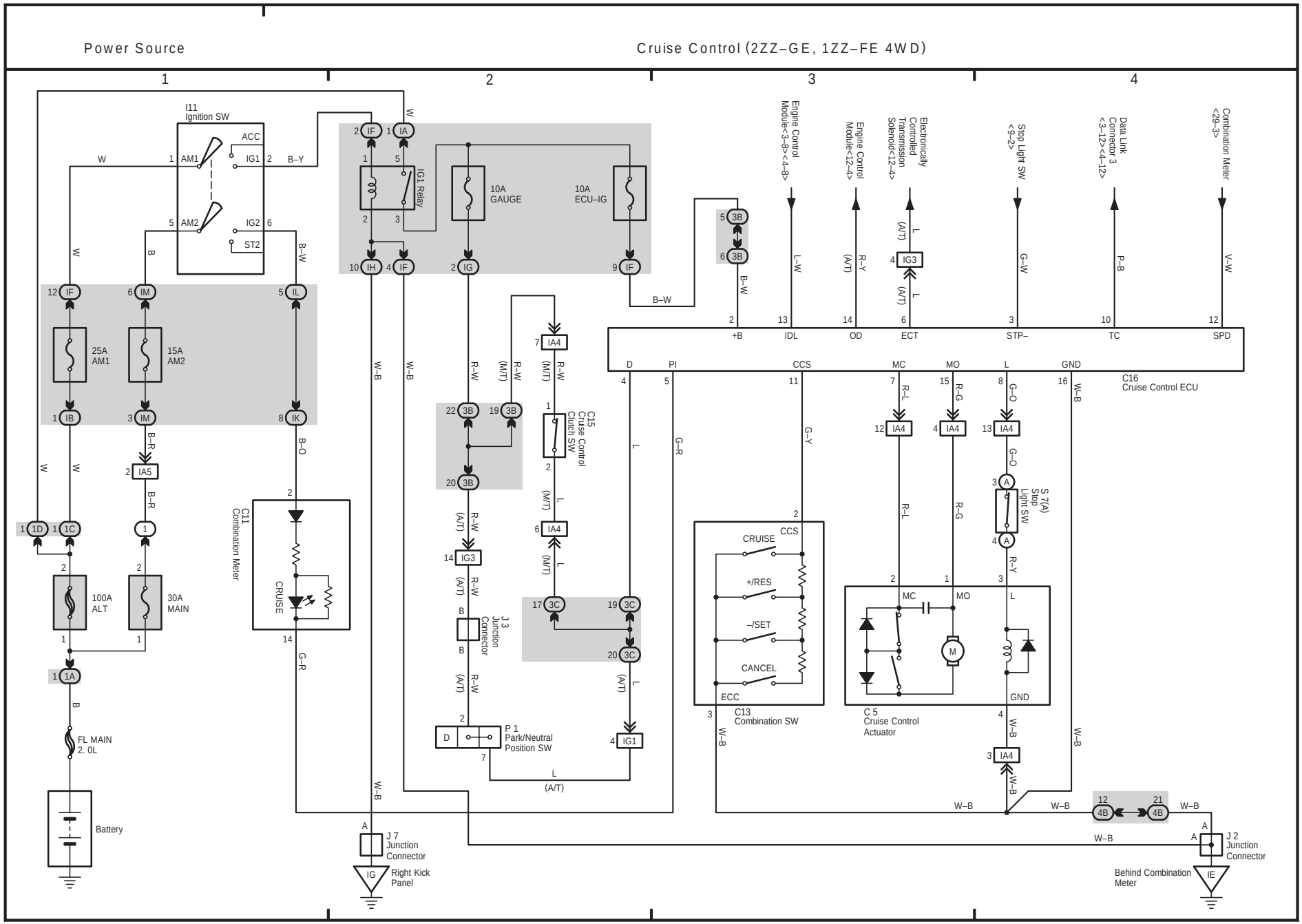

14 COROLLA MATRIX

(Cont. next page)

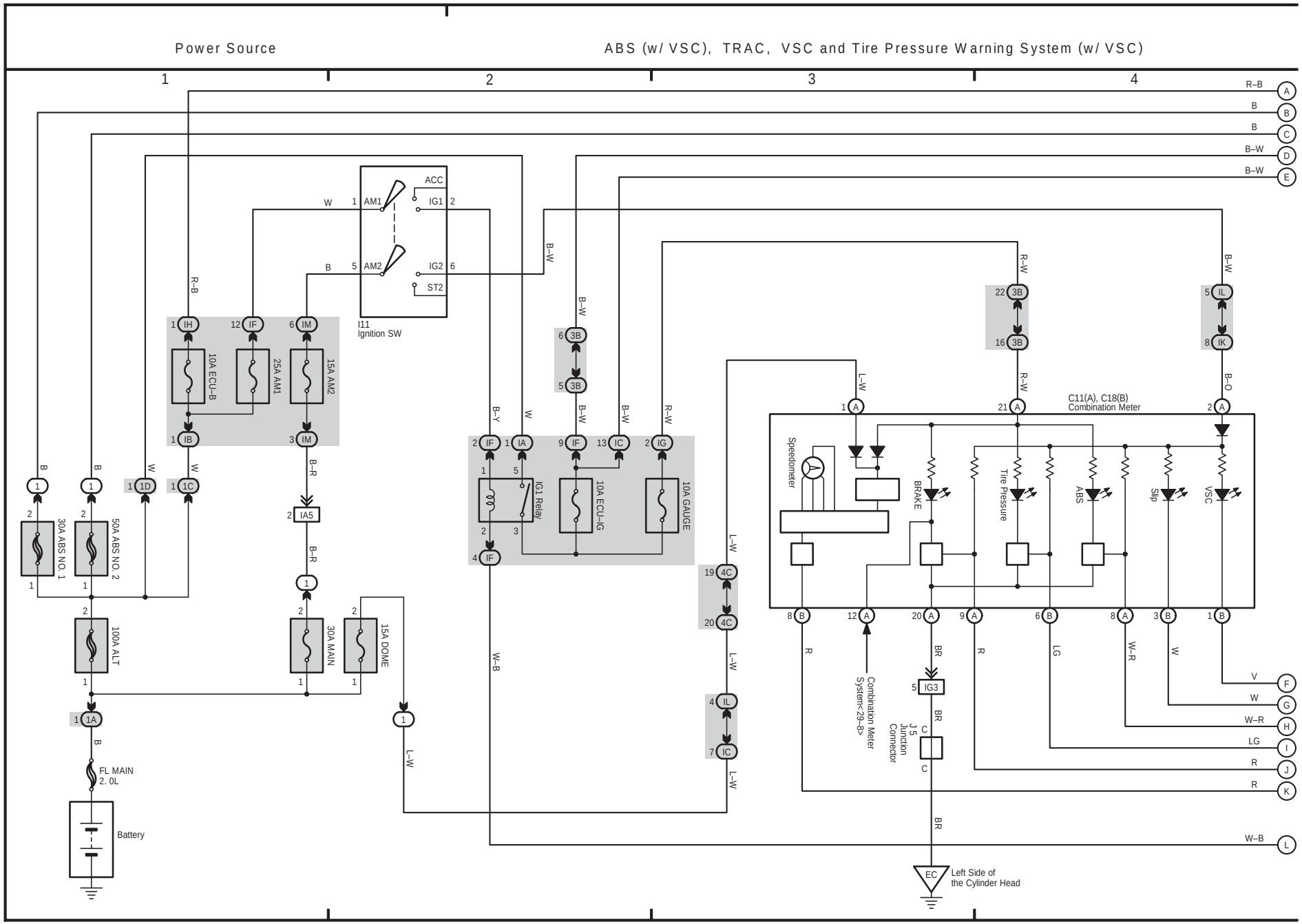

(Cont. next page)

ABS (w/ VSC), TRAC, VSC and Tire Pressure Warning System (w/ VSC)

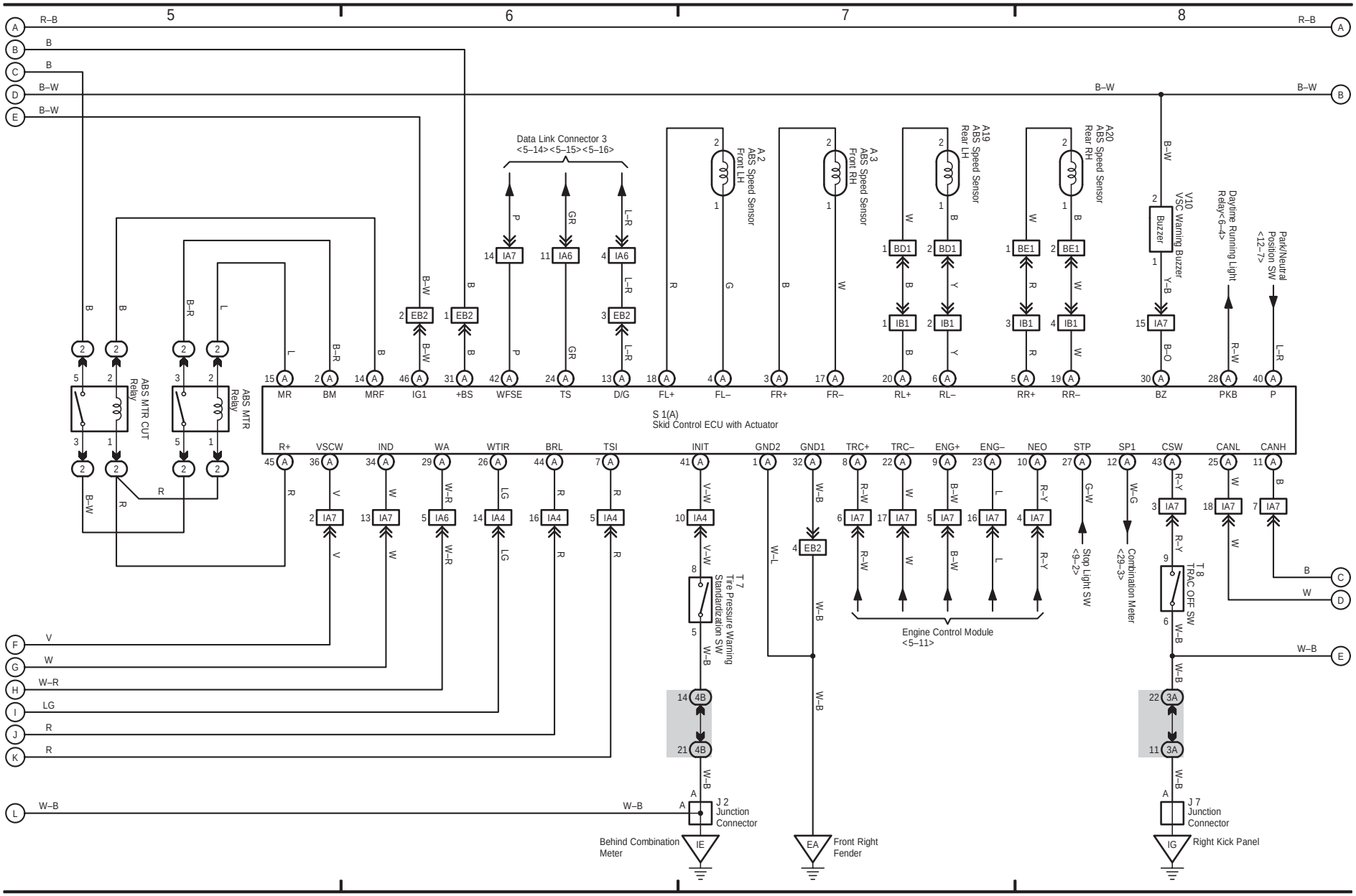

14 COROLLA MATRIX (Cont' d)

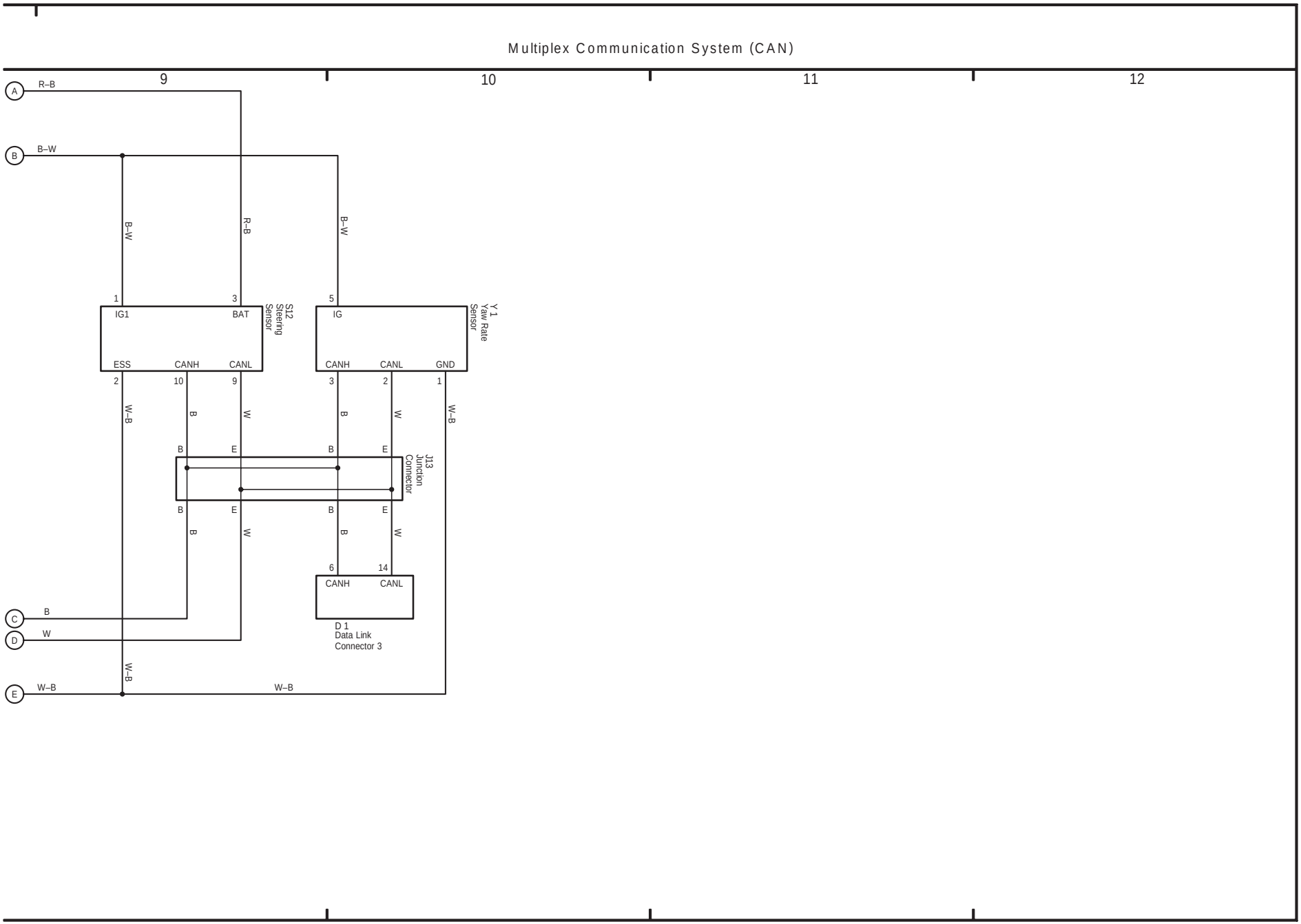

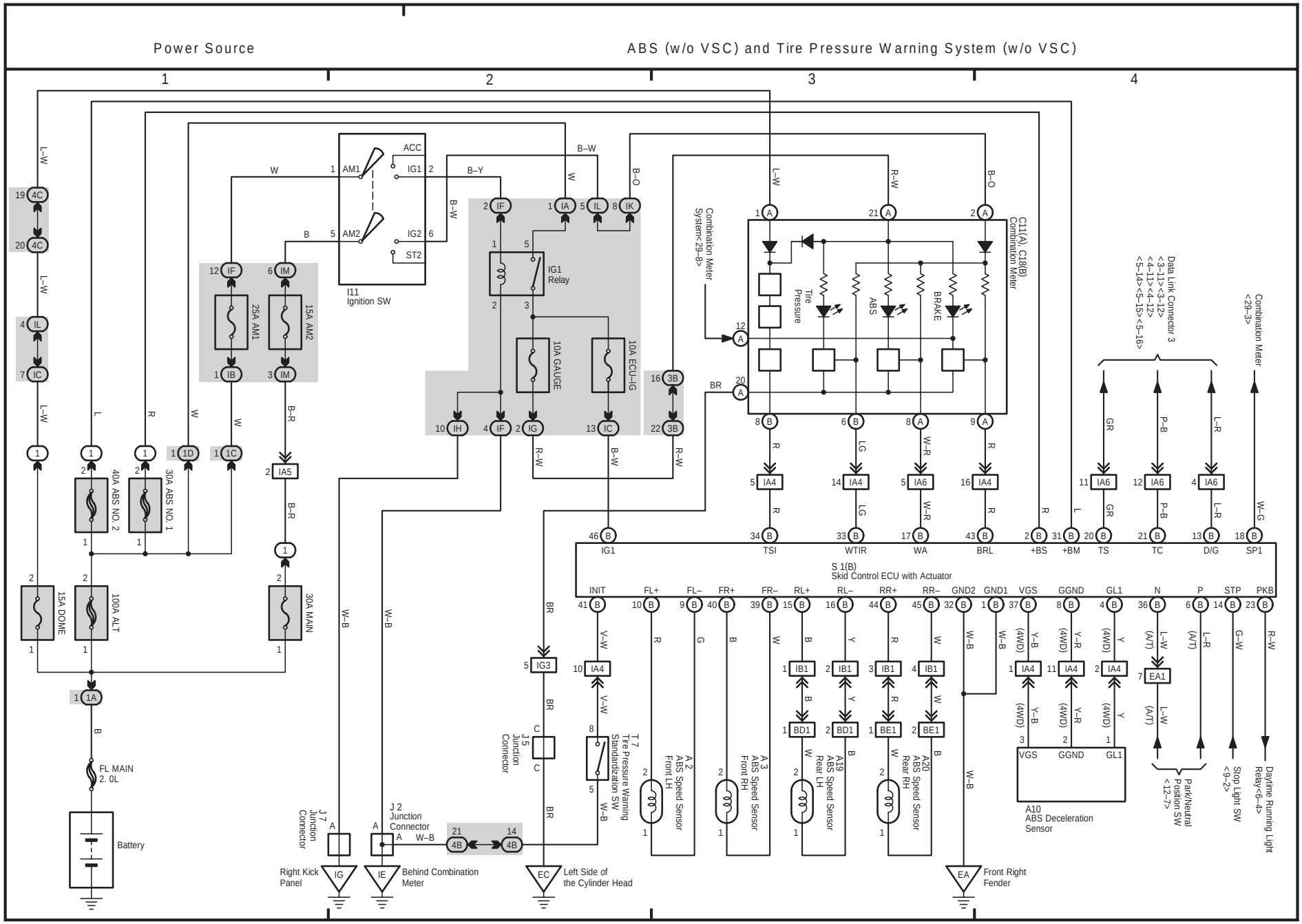
Power Source
ABS (w/o VSC) and Tire Pressure Warning System (w/o VSC)
1
2
3
4
I11
Ignition SW
ACC
IG1
IG2
ST2
AM1
AM2
IG1
Relay
25A AM1
15A AM2
10A GAUGE
10A ECU–IG
40A ABS NO. 2
30A ABS NO. 1
15A DOME
100A ALT
30A MAIN
FL MAIN
2. 0L
Battery
Combination Meter
System<29–8>
C11(A), C18(B)
Combination Meter
Tire
Pressure
ABS
BRAKE
Data Link Connector 3
<3–11><3–12>
<4–11><4–12>
<5–14><5–15><5–16>
Combination Meter
<29–3>
IG1
TSI
WTIR
WA
BRL
+BS
+BM
TS
TC
D/G
SP1
S 1(B)
Skid Control ECU with Actuator
INIT
FL+
FL–
FR+
FR–
RL+
RL–
RR+
RR–
GND2
GND1
VGS
GGND
GL1
N
P
STP
PKB
J 5
Junction
Connector
T 7
Tire Pressure Warning
Standardization SW
A 2
ABS Speed Sensor
Front LH
A 3
ABS Speed Sensor
Front RH
A19
ABS Speed Sensor
Rear LH
A20
ABS Speed Sensor
Rear RH
A10
ABS Deceleration
Sensor
Park/Neutral
Position SW
<12–7>
Stop Light SW
<9–2>
Daytime Running Light
Relay<6–4>
J 7
Junction
Connector
J 2
Junction
Connector
Right Kick
Panel
Behind Combination
Meter
Left Side of
the Cylinder Head
Front Right
Fender

16 COROLLA MATRIX

(Cont. next page)

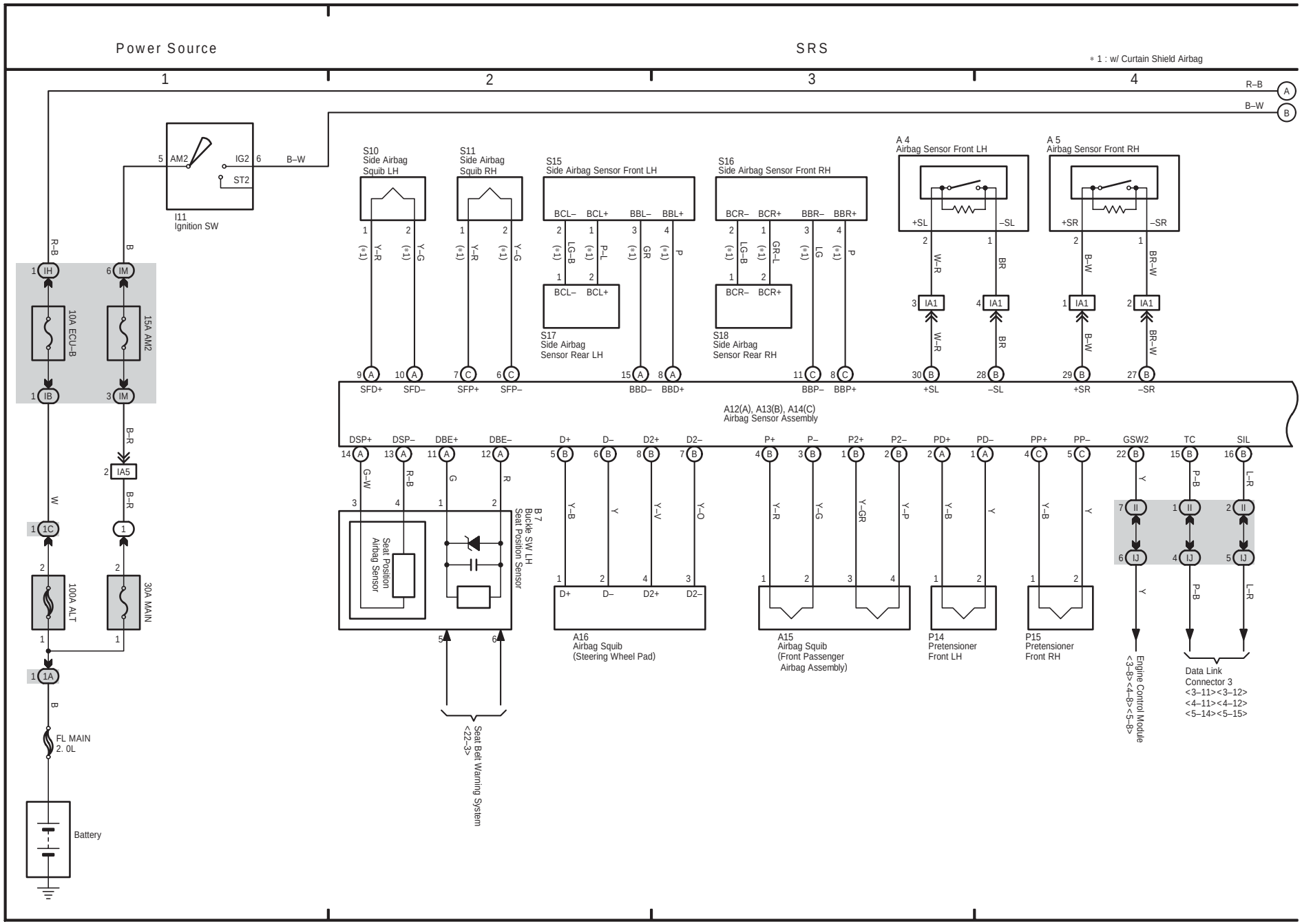

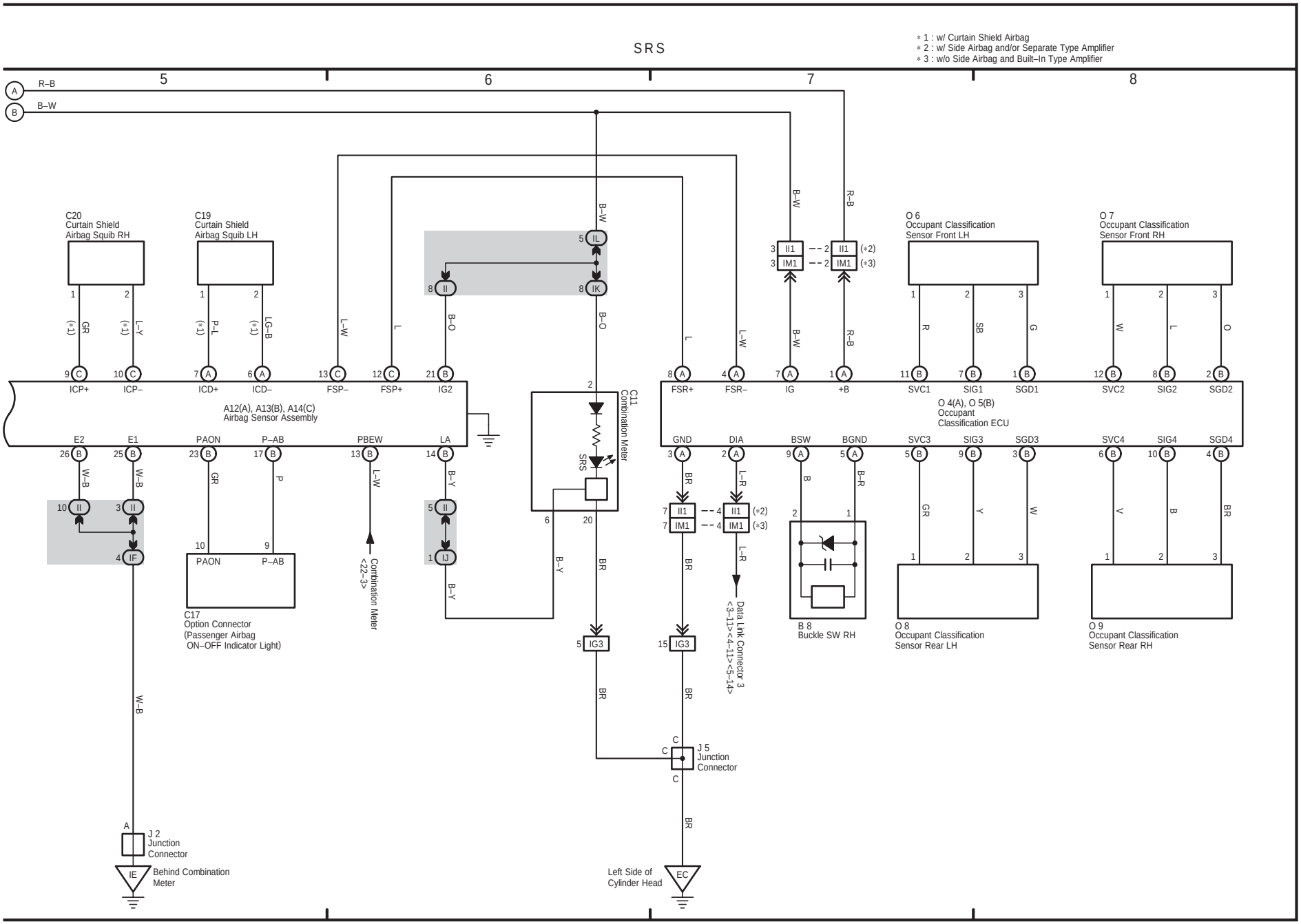
SRS
* 1 : w/ Curtain Shield Airbag
* 2 : w/ Side Airbag and/or Separate Type Amplifier
* 3 : w/o Side Airbag and Built–In Type Amplifier
5
6
7
8
R–B
B–W
C20
Curtain Shield
Airbag Squib RH
C19
Curtain Shield
Airbag Squib LH
ICP+
ICP–
ICD+
ICD–
FSP–
FSP+
IG2
A12(A), A13(B), A14(C)
Airbag Sensor Assembly
E2
E1
PAON
P–AB
PBEW
LA
C17
Option Connector
(Passenger Airbag
ON–OFF Indicator Light)
Combination Meter
<22–3>
C11
Combination Meter
SRS
IG3
J 5
Junction
Connector
J 2
Junction
Connector
Behind Combination
Meter
Left Side of
Cylinder Head
FSR+
FSR–
IG
+B
GND
DIA
BSW
BGND
Data Link Connector 3
<3–11><4–11><5–14>
B 8
Buckle SW RH
O 6
Occupant Classification
Sensor Front LH
O 7
Occupant Classification
Sensor Front RH
SVC1
SIG1
SGD1
SVC2
SIG2
SGD2
O 4(A), O 5(B)
Occupant
Classification ECU
SVC3
SIG3
SGD3
SVC4
SIG4
SGD4
O 8
Occupant Classification
Sensor Rear LH
O 9
Occupant Classification
Sensor Rear RH

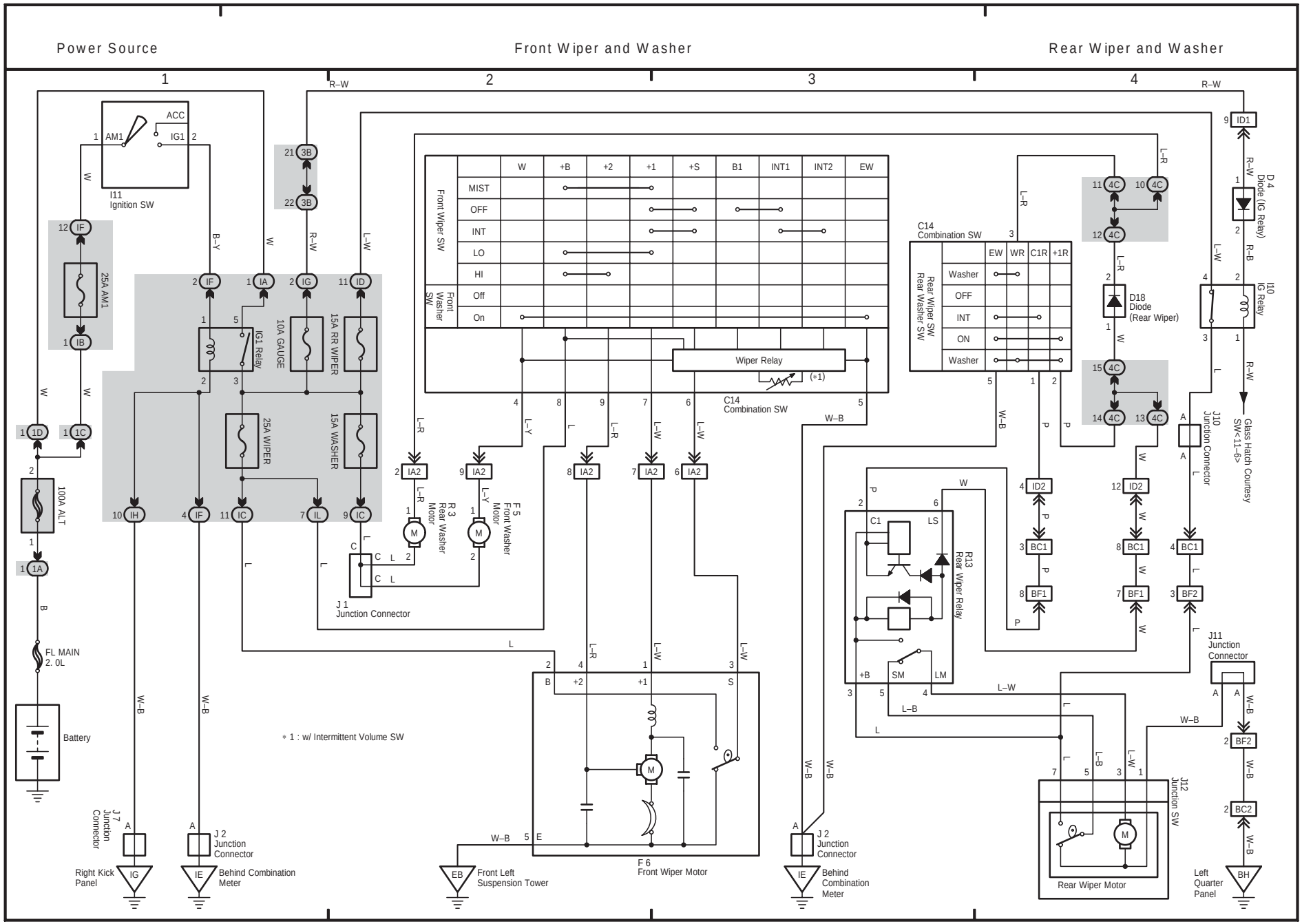
Power Source
Front Wiper and Washer
Rear Wiper and Washer
I11 Ignition SW
ACC
AM1
IG1
25A AM1
IG1 Relay
10A GAUGE
15A RR WIPER
25A WIPER
15A WASHER
100A ALT
FL MAIN 2. 0L
Battery
J 7 Junction Connector
Right Kick Panel
J 2 Junction Connector
Behind Combination Meter
J 1 Junction Connector
R 3 Rear Washer Motor
F 5 Front Washer Motor
Front Wiper SW
Front Wiper Washer SW
MIST
OFF
INT
LO
HI
Off
On
Wiper Relay
C14 Combination SW
Rear Wiper SW Rear Washer SW
Washer
ON
D18 Diode (Rear Wiper)
D 4 Diode (IG Relay)
I10 IG Relay
J10 Junction Connector
Glass Hatch Courtesy SW<11-6>
R13 Rear Wiper Relay
J11 Junction Connector
J12 Junction SW
Rear Wiper Motor
F 6 Front Wiper Motor
Front Left Suspension Tower
Left Quarter Panel
＊1 : w/ Intermittent Volume SW

18 COROLLA MATRIX

(Cont. next page)

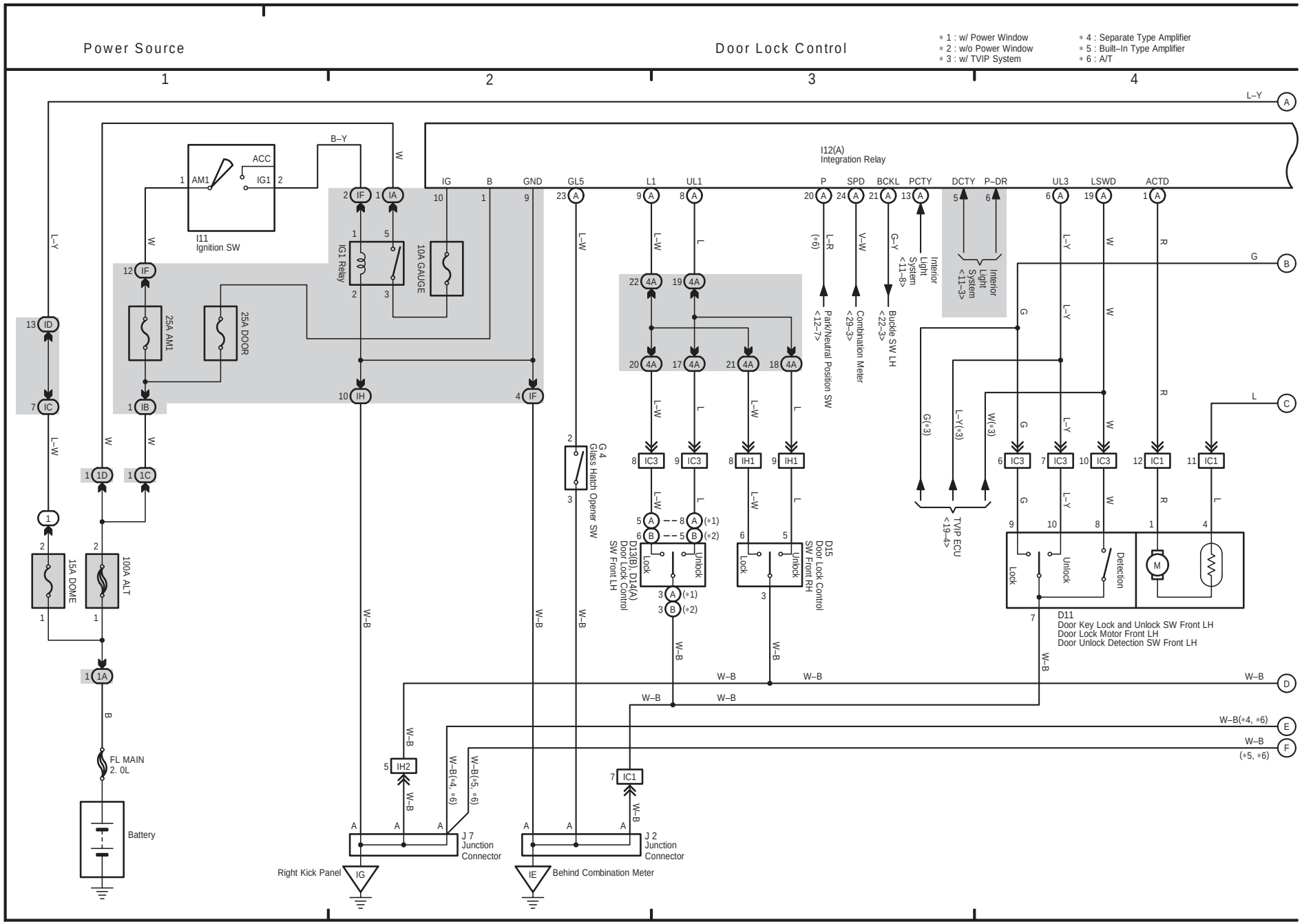

(Cont. next page)

Door Lock Control

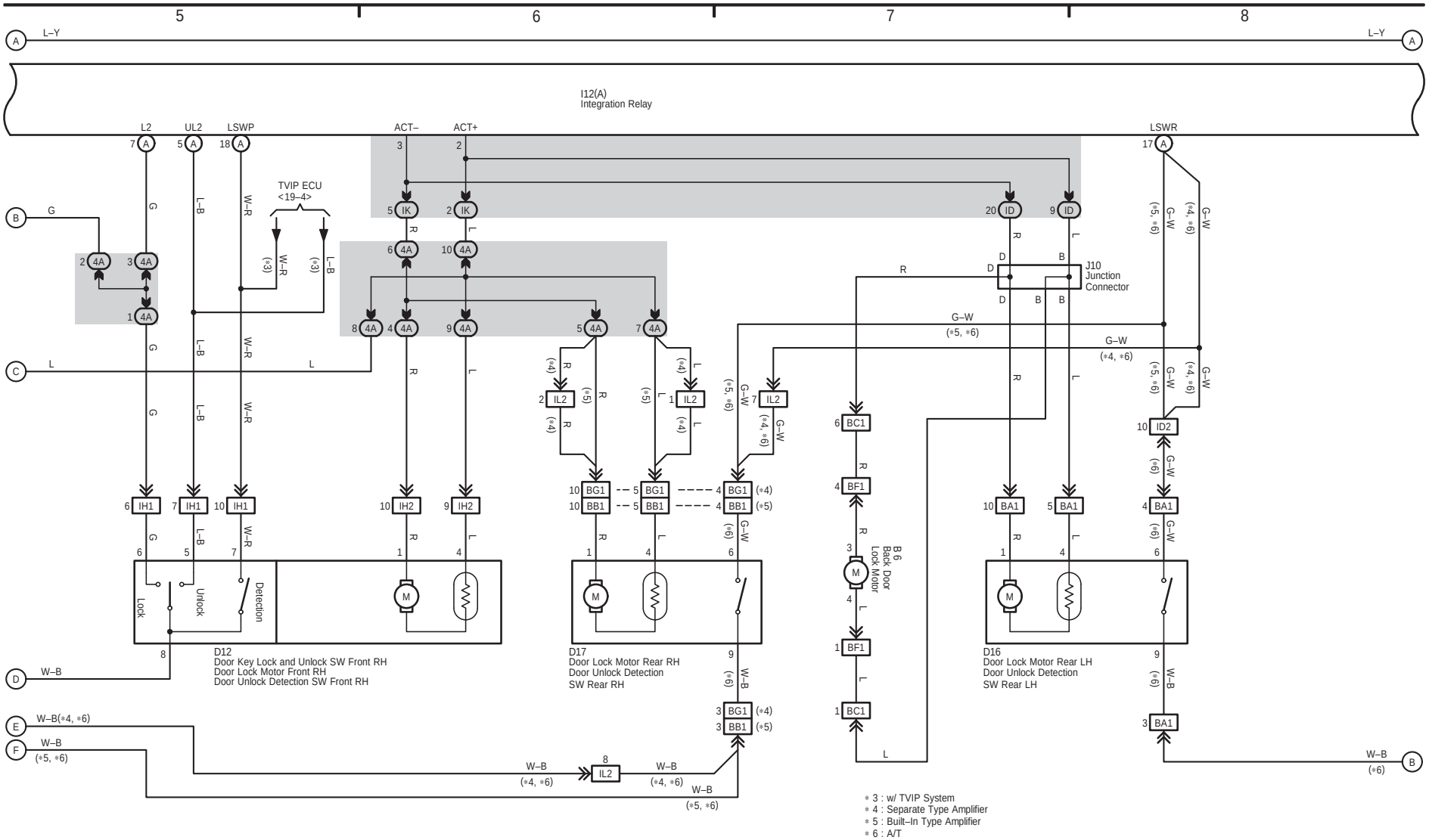

18 COROLLA MATRIX (Cont' d)

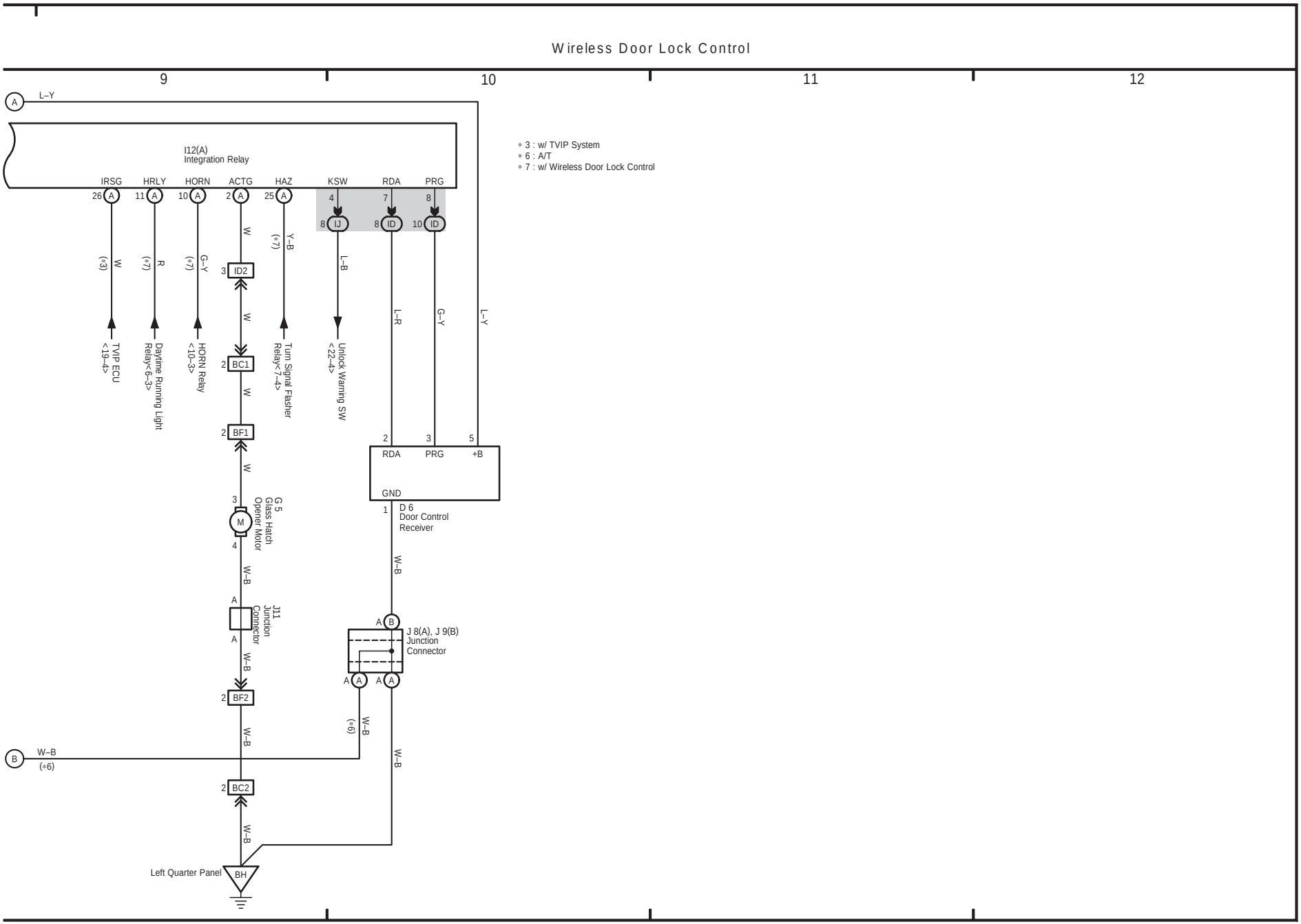

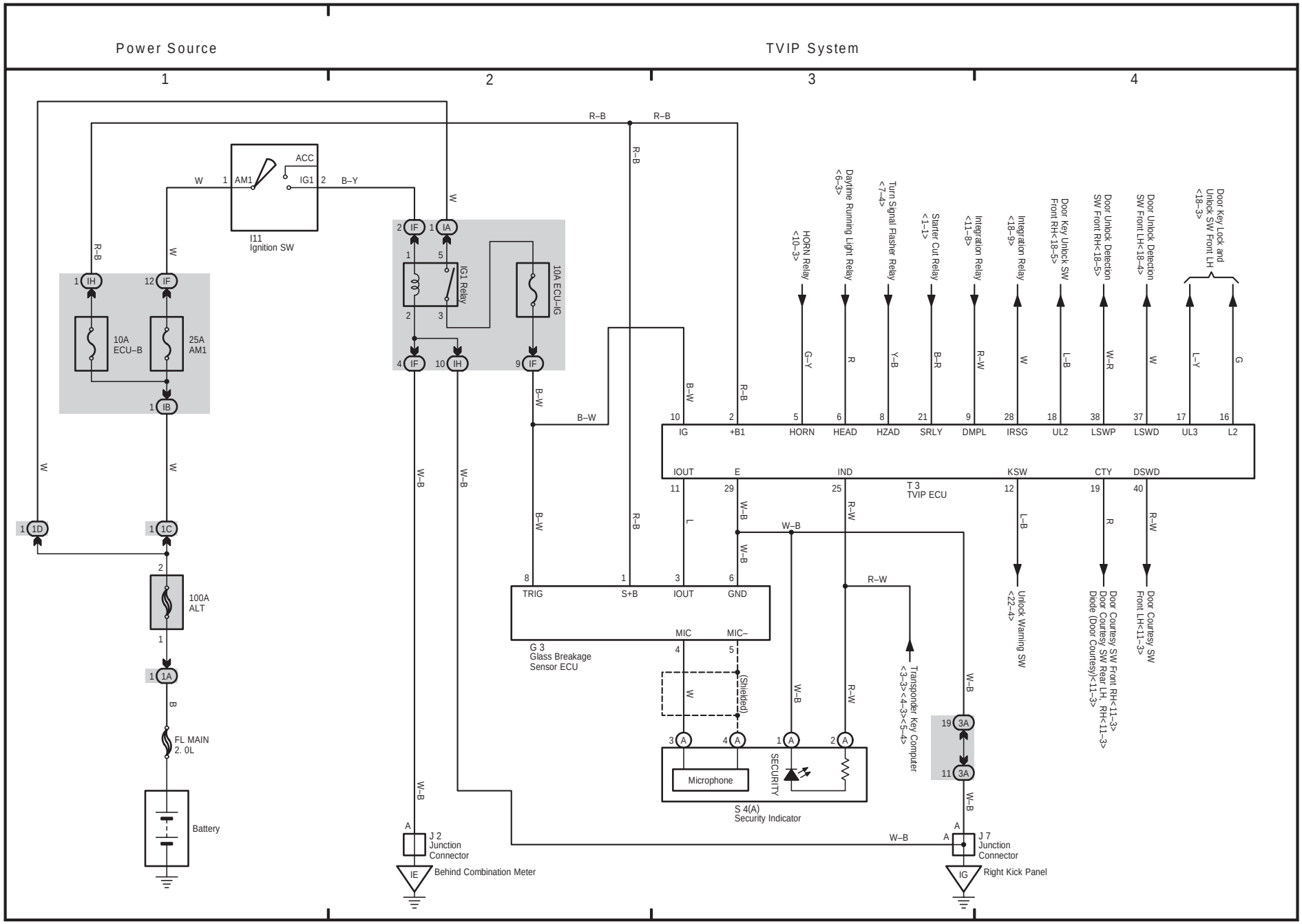
Power Source
TVIP System
1
2
3
4
I11
Ignition SW
ACC
AM1
IG1
W
B–Y
R–B
10A
ECU–B
25A
AM1
IG1 Relay
10A ECU–IG
100A
ALT
FL MAIN
2. 0L
Battery
J 2
Junction
Connector
Behind Combination Meter
J 7
Junction
Connector
Right Kick Panel
G 3
Glass Breakage
Sensor ECU
TRIG
S+B
IOUT
GND
MIC
MIC–
(Shielded)
Microphone
S 4(A)
Security Indicator
SECURITY
Transponder Key Computer
<3–3><4–3><5–4>
T 3
TVIP ECU
IG
+B1
HORN
HEAD
HZAD
SRLY
DMPL
IRSG
UL2
LSWP
LSWD
UL3
L2
IOUT
E
IND
KSW
CTY
DSWD
HORN Relay
<10–3>
Daytime Running Light Relay
<6–3>
Turn Signal Flasher Relay
<7–4>
Starter Cut Relay
<1–1>
Integration Relay
<11–8>
Integration Relay
<18–9>
Door Key Unlock SW
Front RH<18–5>
Door Unlock Detection
SW Front RH<18–5>
Door Unlock Detection
SW Front LH<18–4>
Door Key Lock and
Unlock SW Front LH
<18–3>
Unlock Warning SW
<22–4>
Door Courtesy SW Front RH<11–3>
Door Courtesy SW Rear LH, RH<11–3>
Diode (Door Courtesy)<11–3>
Door Courtesy SW
Front LH<11–3>

20 COROLLA MATRIX

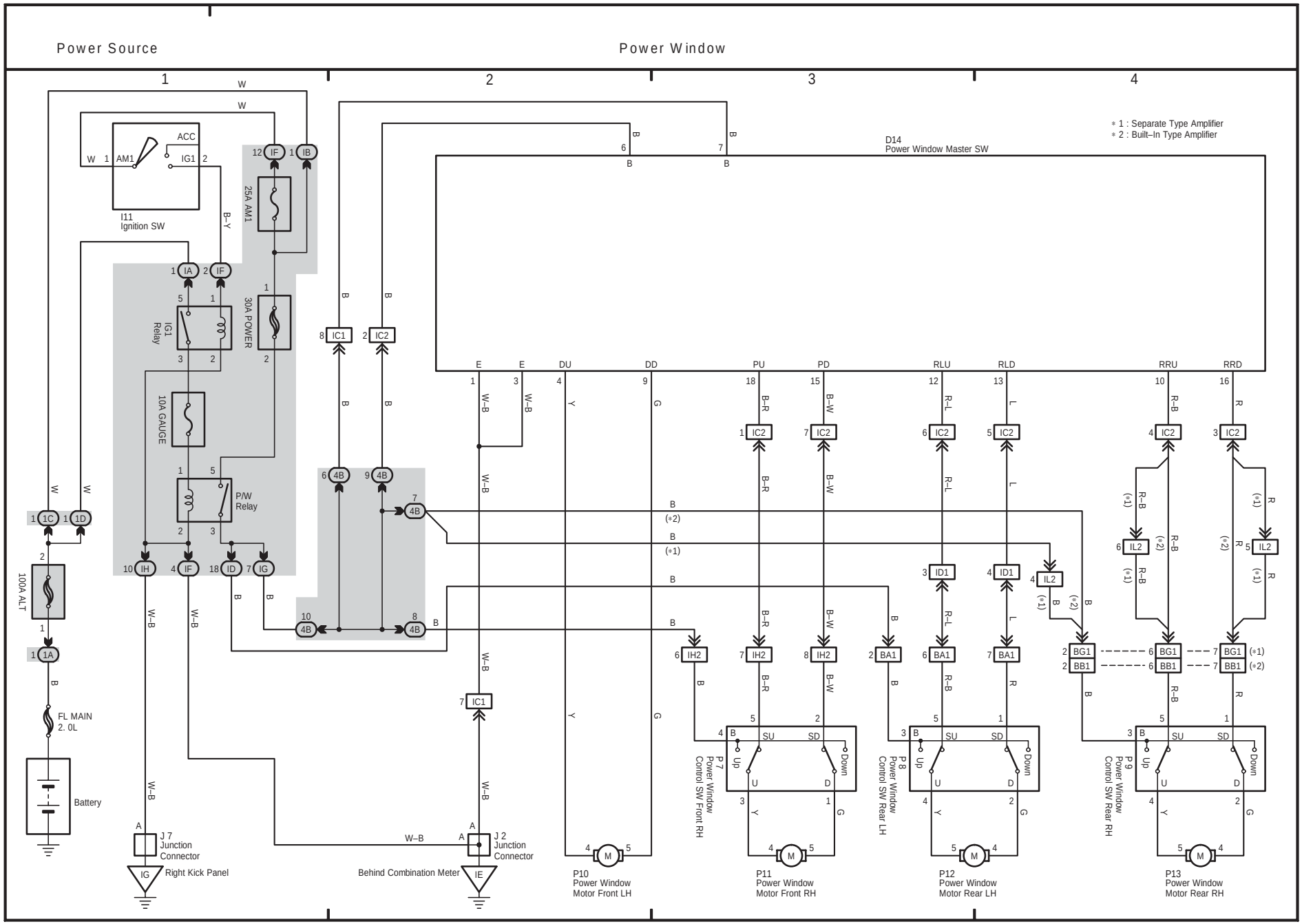

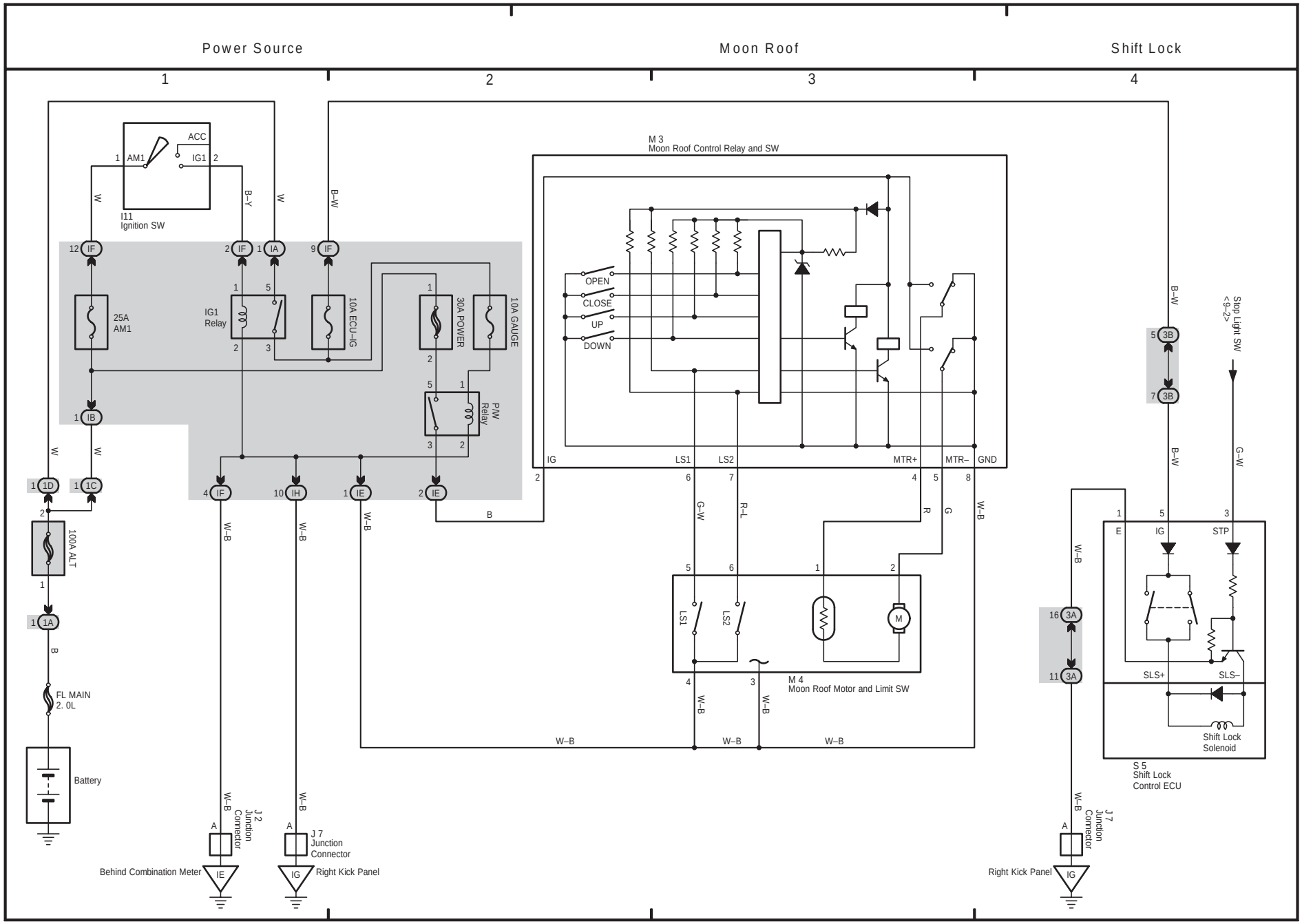
Power Source
Moon Roof
Shift Lock
1
2
3
4
ACC
AM1
IG1
I11
Ignition SW
25A
AM1
IG1
Relay
10A ECU–IG
30A POWER
10A GAUGE
P/W
Relay
100A ALT
FL MAIN
2. 0L
Battery
M 3
Moon Roof Control Relay and SW
OPEN
CLOSE
UP
DOWN
IG
LS1
LS2
MTR+
MTR–
GND
M 4
Moon Roof Motor and Limit SW
Stop Light SW
<9–2>
E
IG
STP
SLS+
SLS–
Shift Lock
Solenoid
S 5
Shift Lock
Control ECU
J 2
Junction
Connector
J 7
Junction
Connector
Behind Combination Meter
Right Kick Panel
Right Kick Panel

22 COROLLA MATRIX

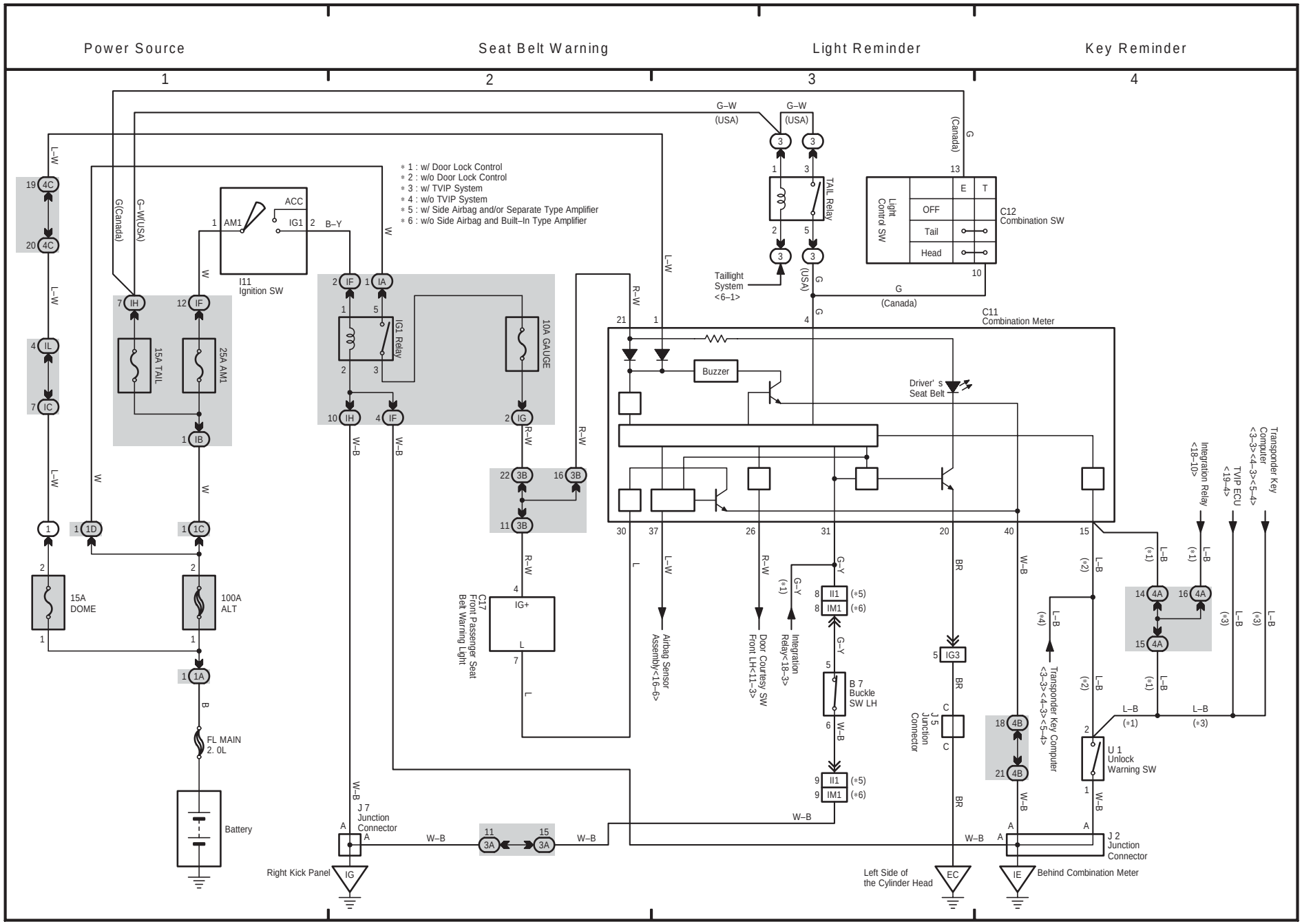

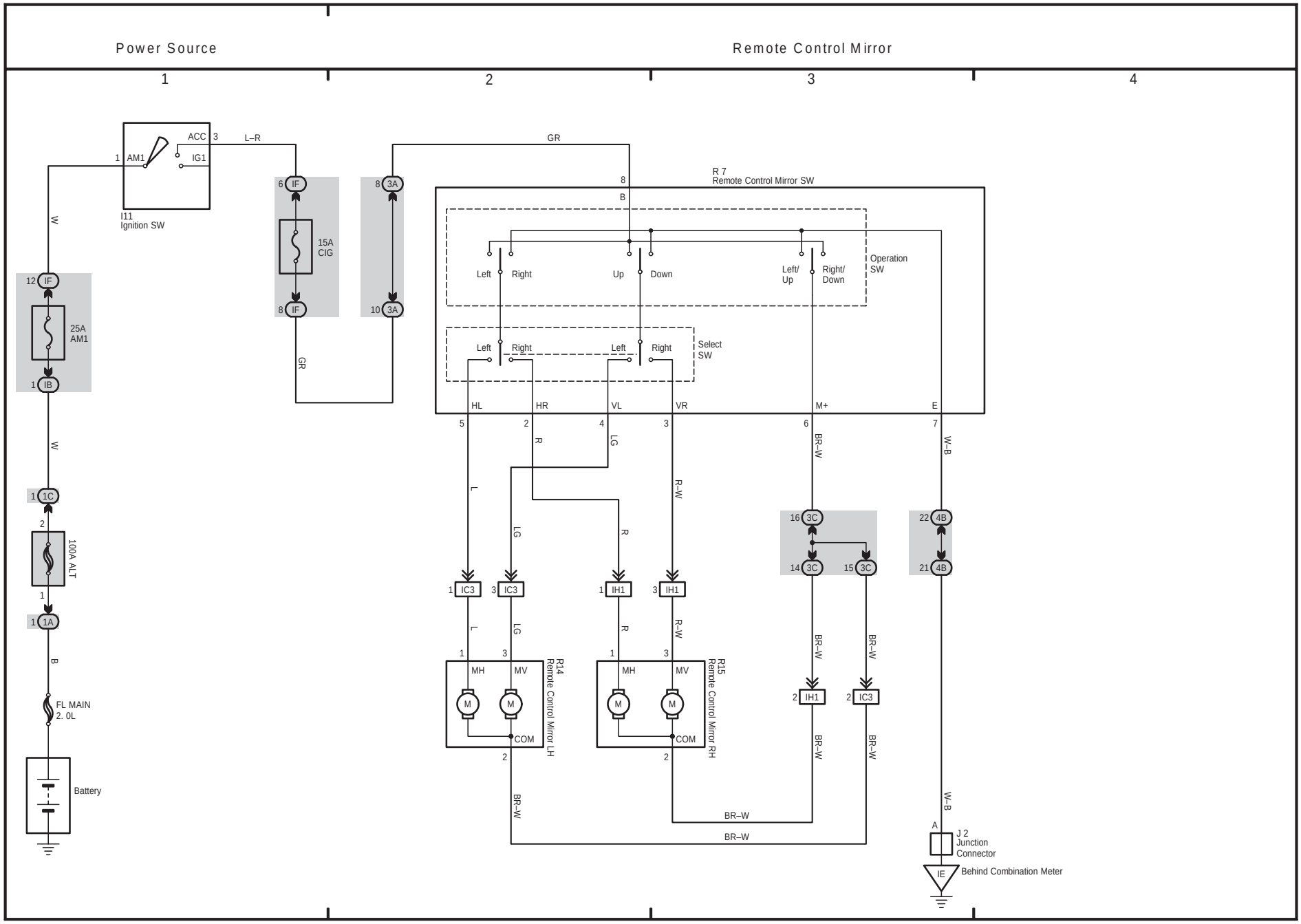
Power Source
Remote Control Mirror
1
2
3
4
ACC
AM1
IG1
I11
Ignition SW
L–R
W
GR
R 7
Remote Control Mirror SW
Operation SW
Left
Right
Up
Down
Left/ Up
Right/ Down
Select SW
HL
HR
VL
VR
M+
E
25A AM1
15A CIG
100A ALT
FL MAIN 2. 0L
Battery
IC3
IH1
R14 Remote Control Mirror LH
R15 Remote Control Mirror RH
MH
MV
COM
BR–W
W–B
J 2 Junction Connector
Behind Combination Meter

24 COROLLA MATRIX

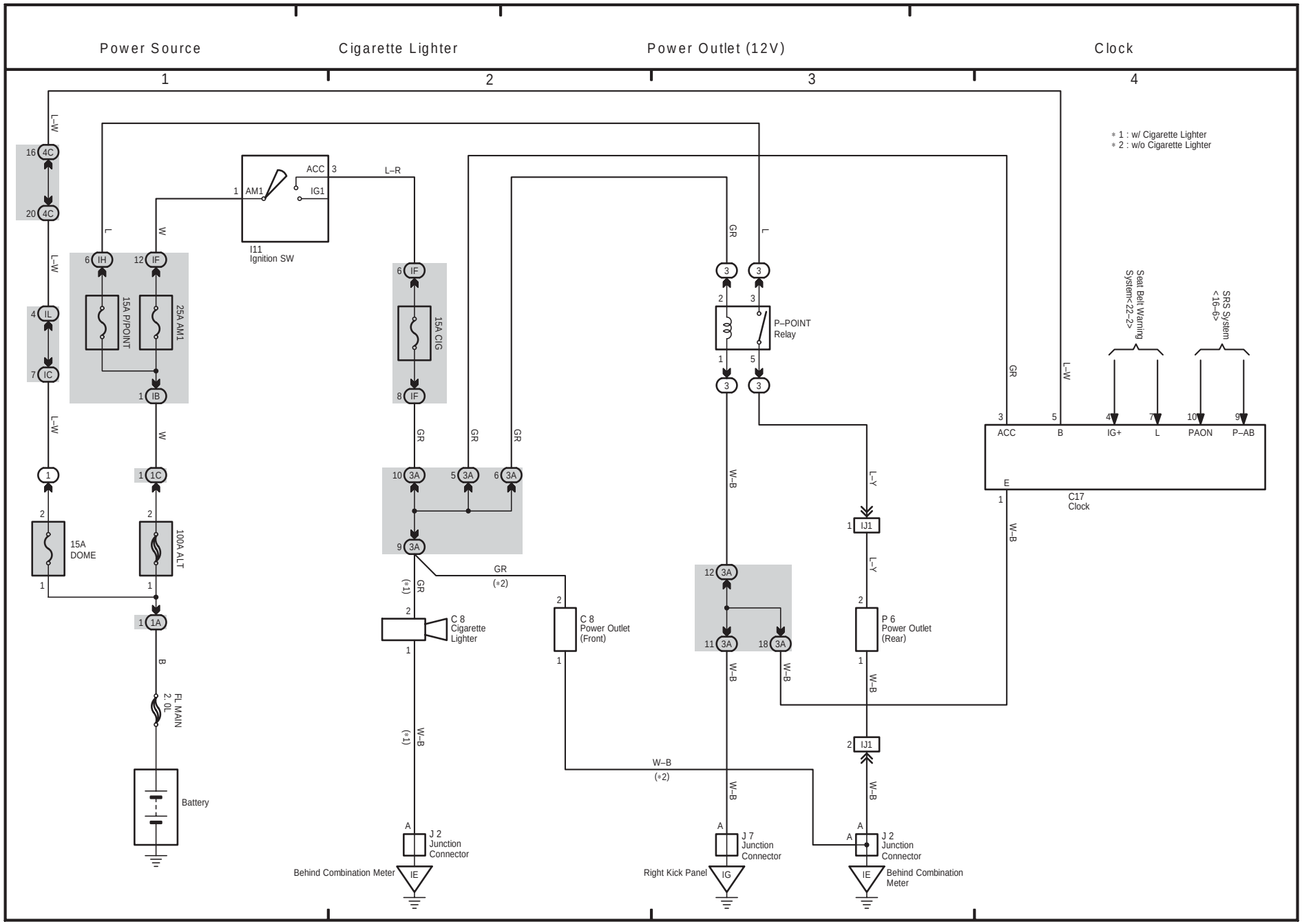

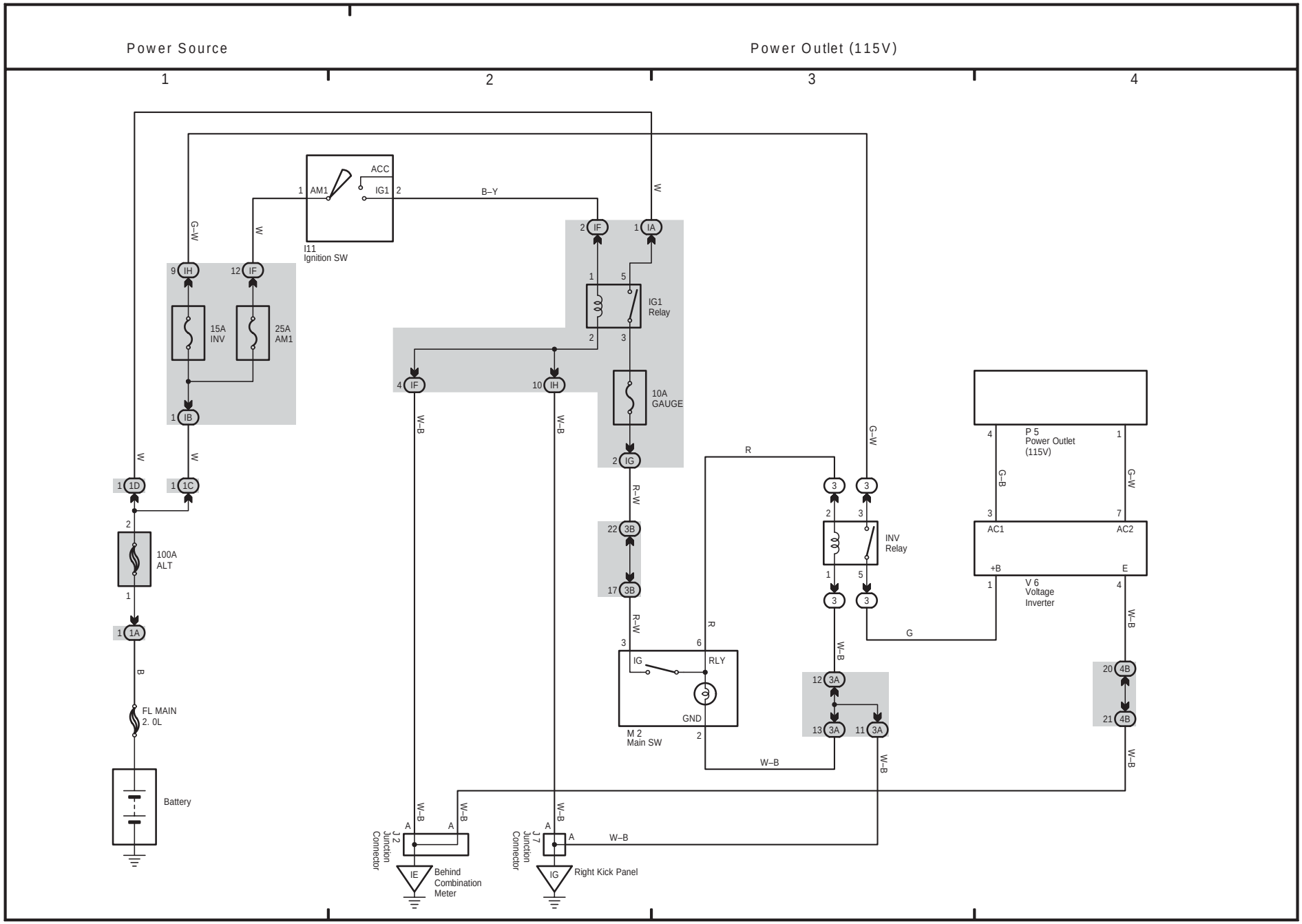
Power Source
Power Outlet (115V)
1
2
3
4
ACC
AM1
IG1
B–Y
I11
Ignition SW
G–W
W
IH
IF
IA
IB
15A
INV
25A
AM1
IG1
Relay
10A
GAUGE
IG
R–W
3B
1D
1C
100A
ALT
1A
B
FL MAIN
2. 0L
Battery
W–B
J 2
Junction
Connector
IE
Behind
Combination
Meter
J 7
Junction
Connector
Right Kick Panel
R
3
INV
Relay
G
3A
4B
M 2
Main SW
IG
RLY
GND
P 5
Power Outlet
(115V)
G–B
AC1
AC2
+B
E
V 6
Voltage
Inverter

26 COROLLA MATRIX

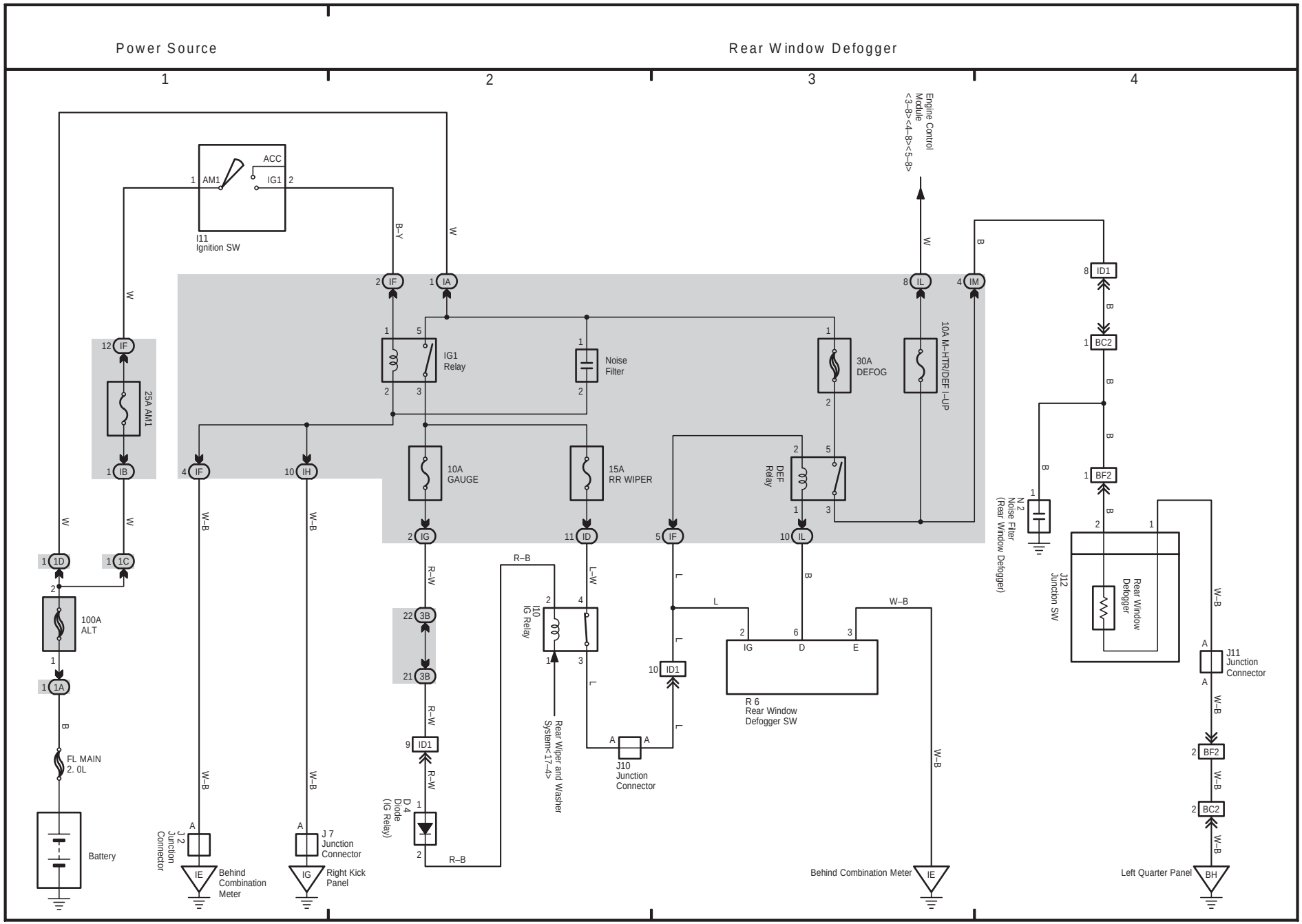

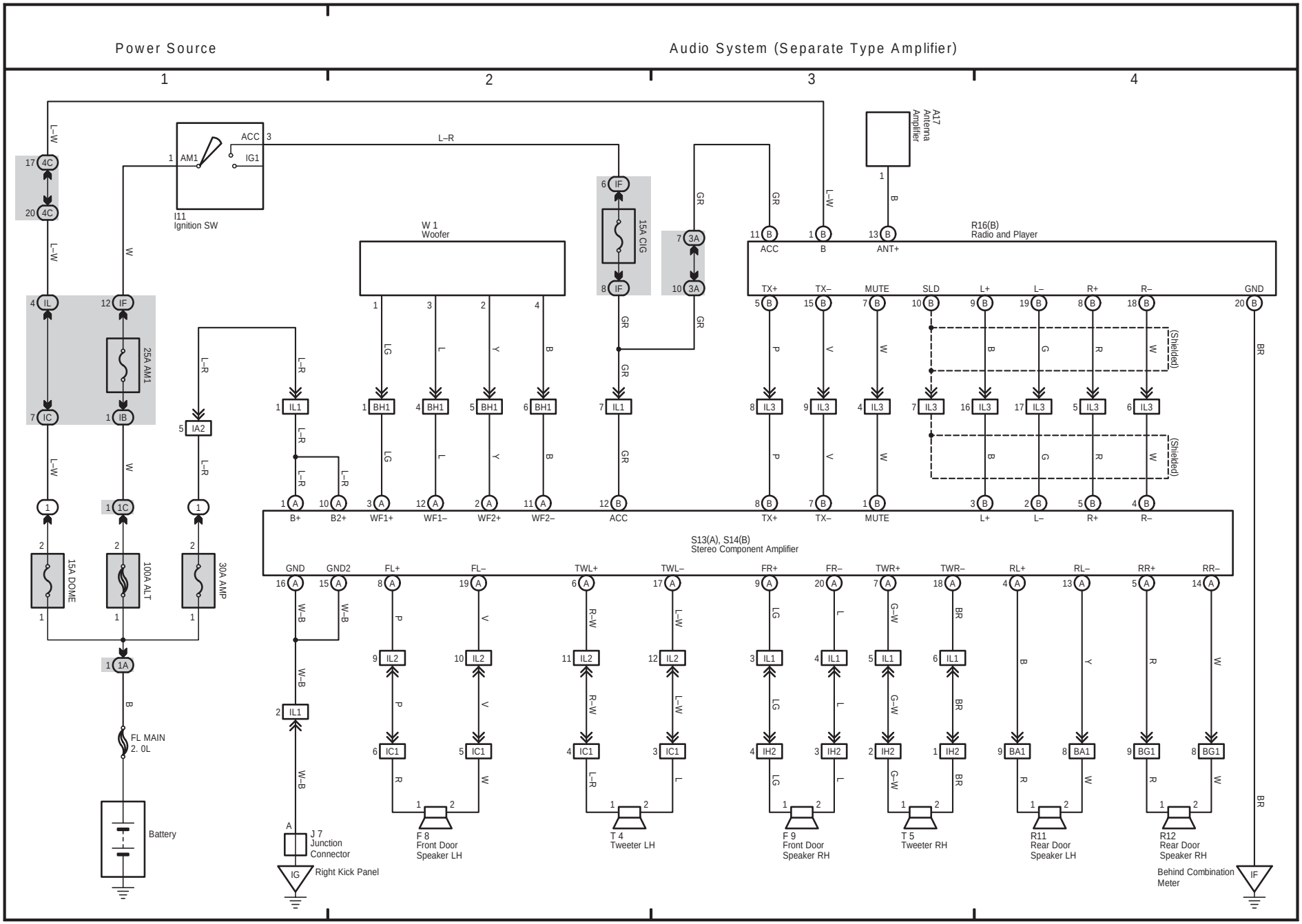
Power Source
Audio System (Separate Type Amplifier)
1
2
3
4
I11
Ignition SW
AM1
ACC
IG1
A17
Antenna
Amplifier
W 1
Woofer
15A CIG
25A AM1
15A DOME
100A ALT
30A AMP
FL MAIN
2. 0L
Battery
J 7
Junction
Connector
Right Kick Panel
R16(B)
Radio and Player
ACC
B
ANT+
TX+
TX–
MUTE
SLD
L+
L–
R+
R–
GND
(Shielded)
S13(A), S14(B)
Stereo Component Amplifier
B+
B2+
WF1+
WF1–
WF2+
WF2–
GND2
FL+
FL–
TWL+
TWL–
FR+
FR–
TWR+
TWR–
RL+
RL–
RR+
RR–
F 8
Front Door
Speaker LH
T 4
Tweeter LH
F 9
Front Door
Speaker RH
T 5
Tweeter RH
R11
Rear Door
Speaker LH
R12
Rear Door
Speaker RH
Behind Combination
Meter

28 COROLLA MATRIX

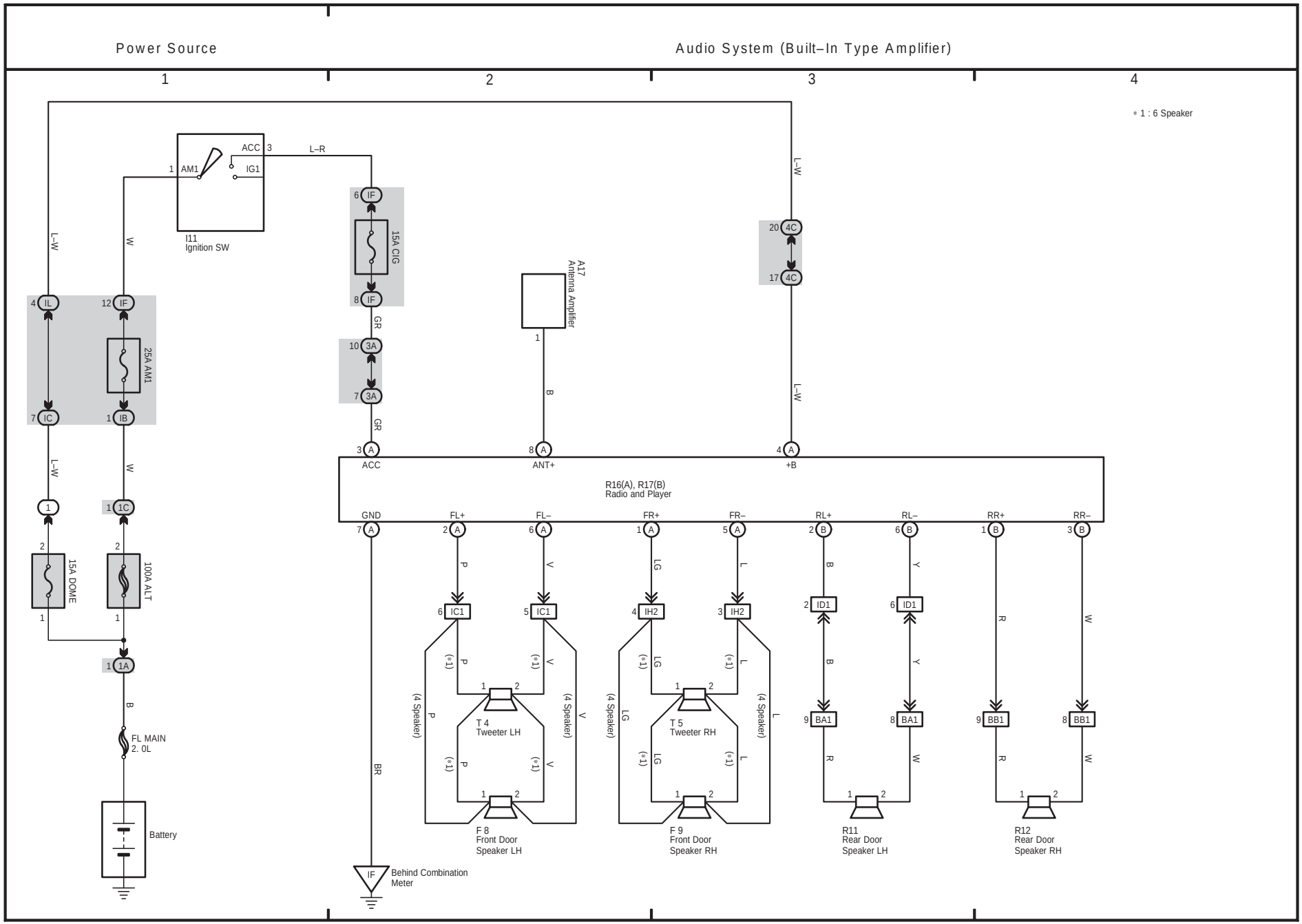

(Cont. next page)

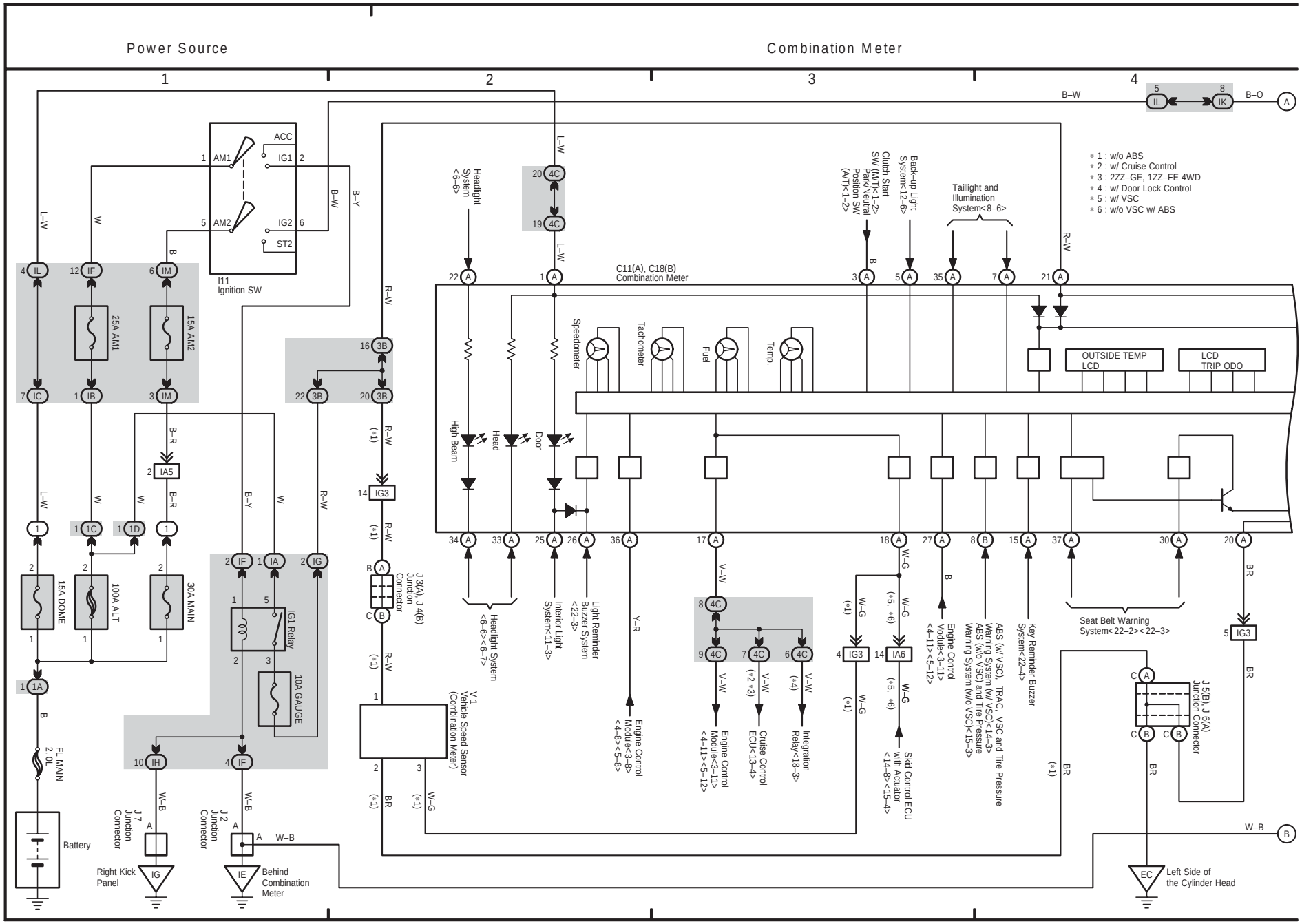

29 COROLLA MATRIX (Cont' d)

(Cont. next page)

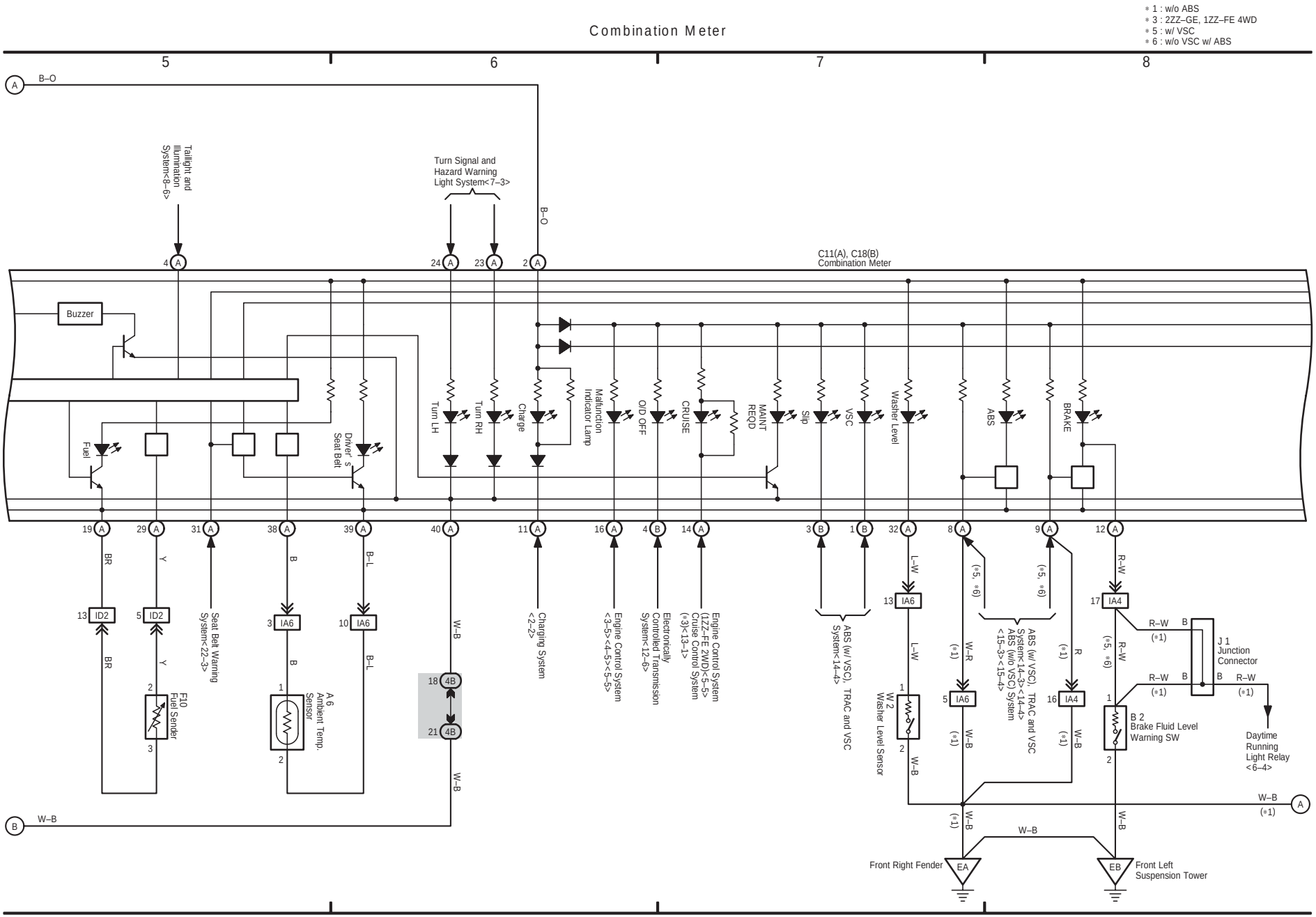

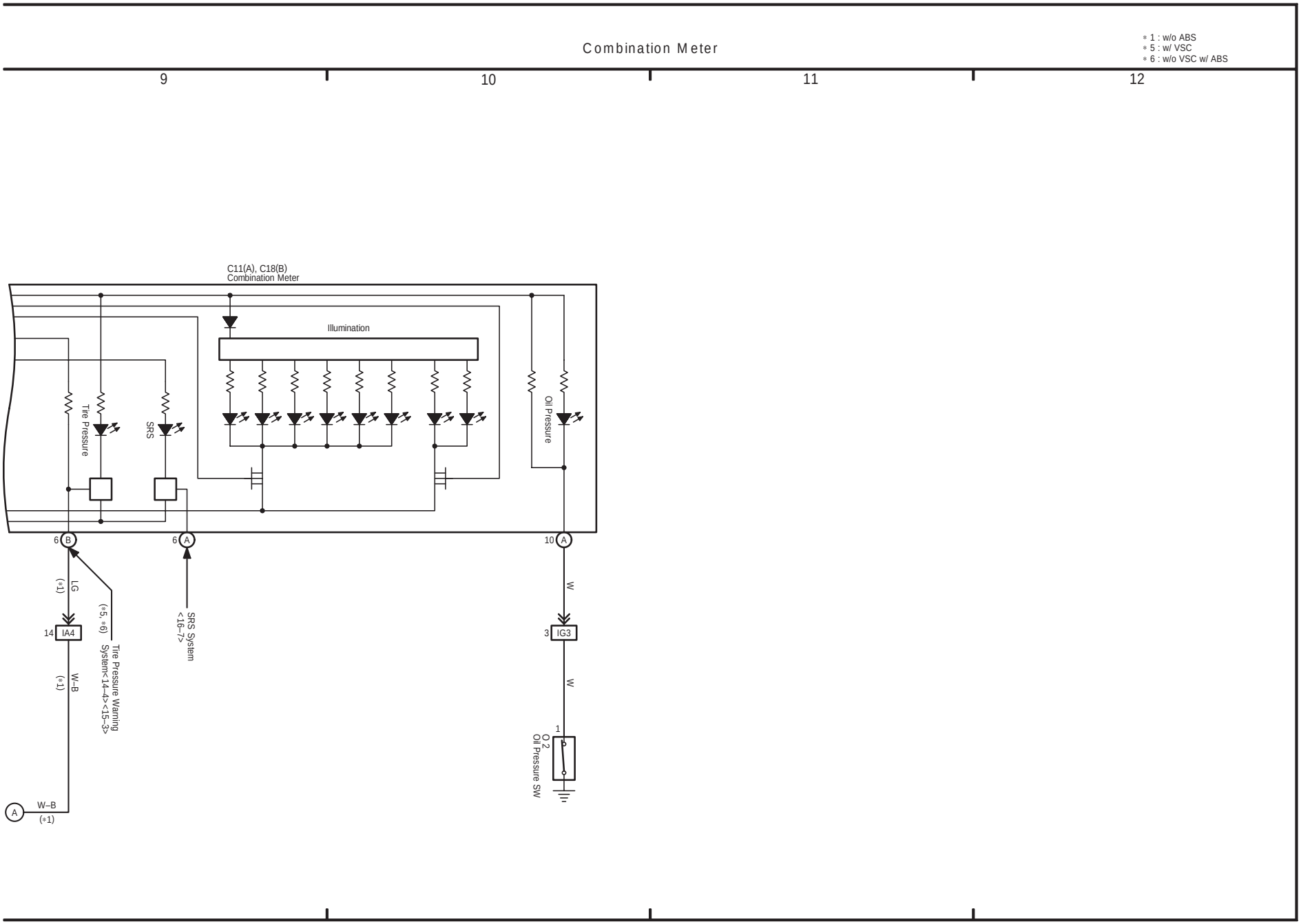
Combination Meter
* 1 : w/o ABS
* 5 : w/ VSC
* 6 : w/o VSC w/ ABS
9
10
11
12
C11(A), C18(B)
Combination Meter
Illumination
Tire Pressure
SRS
Oil Pressure
6 B
6 A
10 A
LG
(*1)
14 IA4
W–B
(*1)
(*5, *6)
Tire Pressure Warning System<14–4><15–3>
SRS System <16–7>
W
3 IG3
W
1
Oil Pressure SW
A
W–B
(*1)

30 COROLLA MATRIX

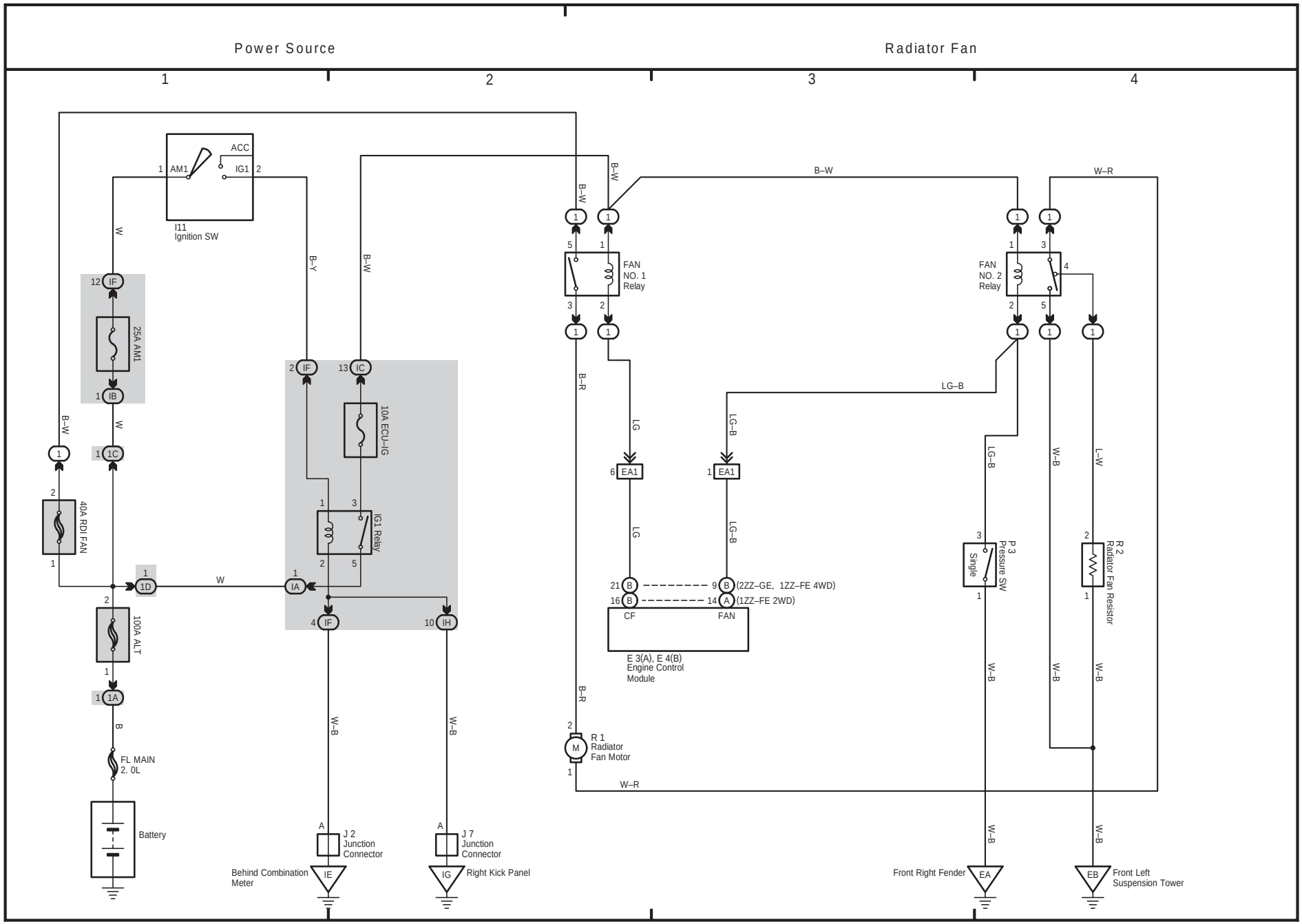

(Cont. next page)

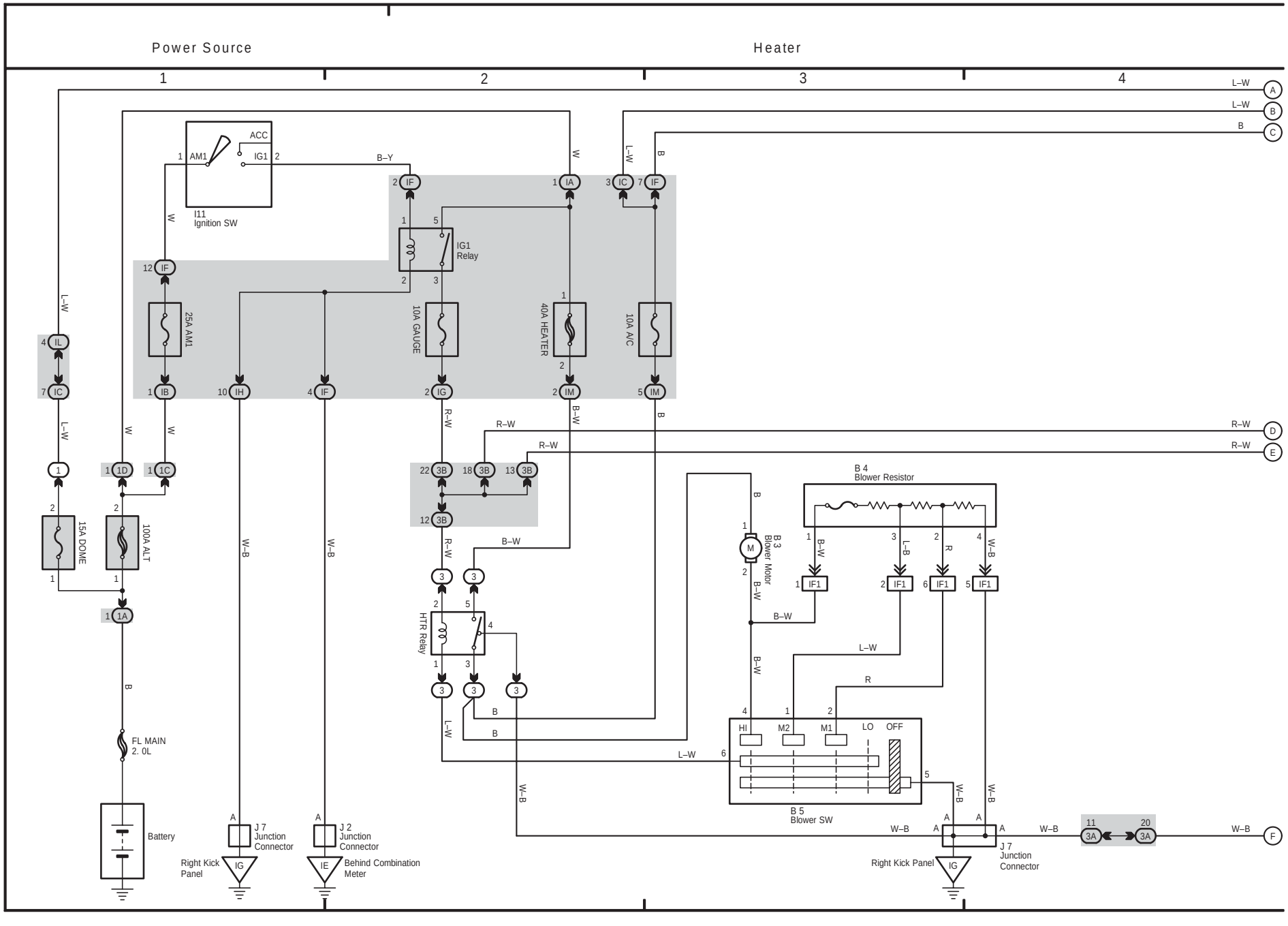

31 COROLLA MATRIX (Cont' d)

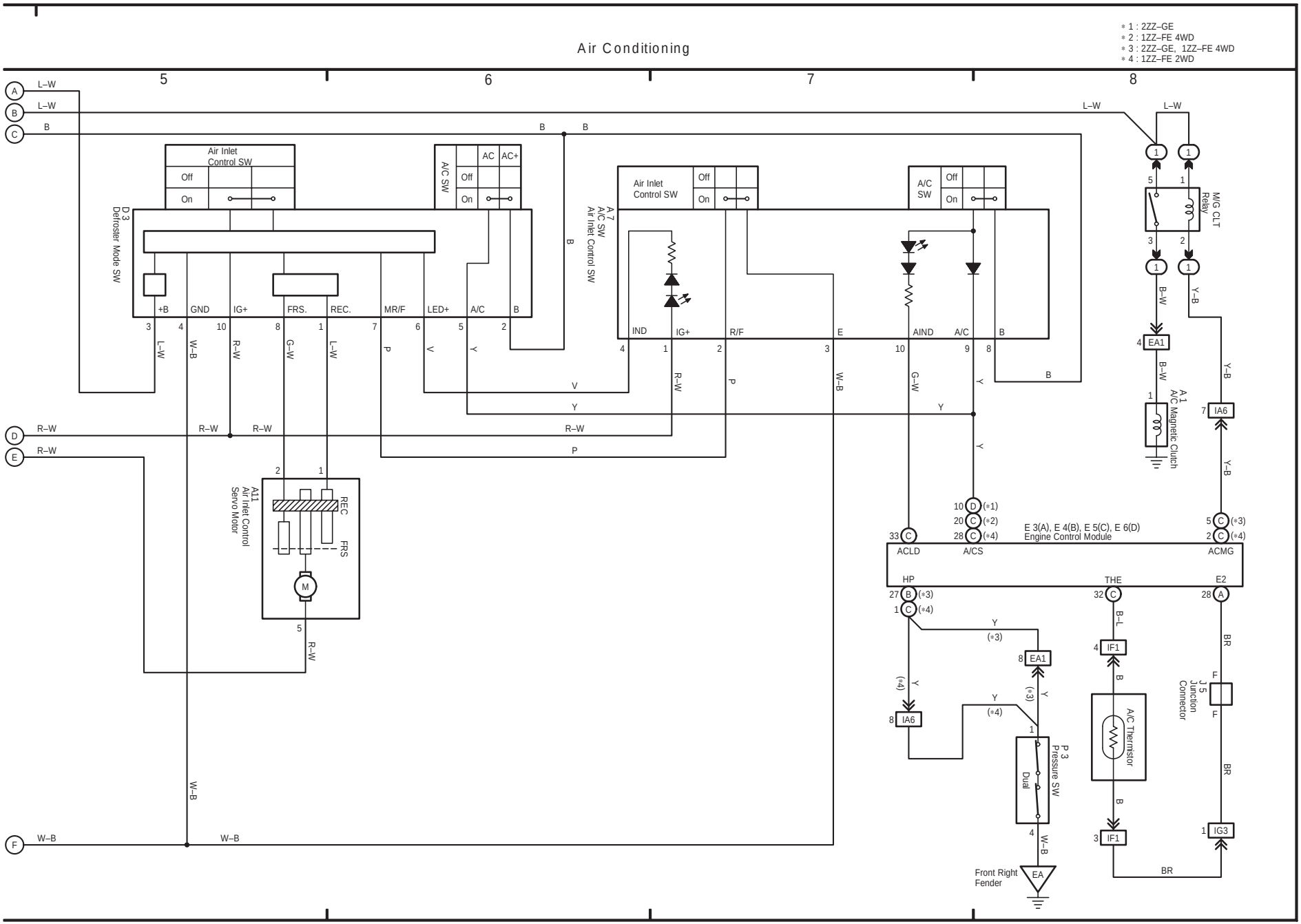

2006 COROLLA MATRIX ELECTRICAL WIRING DIAGRAM SYSTEM CIRCUITS

	Page
ABS (w/ VSC)	186
ABS (w/o VSC)	194
Air Conditioning	236
Audio System (Built–In Type Amplifier)	222
Audio System (Separate Type Amplifier)	218
Automatic Glare–Resistant EC Mirror with Compass	138
Back–Up Light	120
Charging	56
Cigarette Lighter	130
Clock	216
Combination Meter	224
Cruise Control (1ZZ–FE 2WD)	180
Cruise Control (2ZZ–GE, 1ZZ–FE 4WD)	174
Door Lock Control	144
Electronically Controlled Transmission	168
Engine Control (1ZZ–FE 2WD)	82
Engine Control (1ZZ–FE 4WD)	70
Engine Control (2ZZ–GE)	58
Engine Immobiliser System	94
Front Fog Light	104
Front Wiper and Washer	122
Headlight	100
Heater	232
Horn	128
Ignition	54
Illumination	108
Interior Light	114
Key Reminder	208
Light Reminder	208
Moon Roof	166
Multiplex Communication System (CAN Bus)	98
Power Outlet (115V)	134
Power Outlet (12V)	132
Power Source	48
Power Window	140
Radiator Fan	230
Rear Window Defogger	214
Rear Wiper and Washer	124
Remote Control Mirror	136
Seat Belt Warning	210
Shift Lock	206
SRS	199
Starting	52
Stop Light	118
Taillight	108
Tire Pressure Warning System (w/ VSC)	186
Tire Pressure Warning System (w/o VSC)	194
TRAC	186
Turn Signal and Hazard Warning Light	106
TVIP System	160
VSC	186
Wireless Door Lock Control	152

[Engine Compartment]

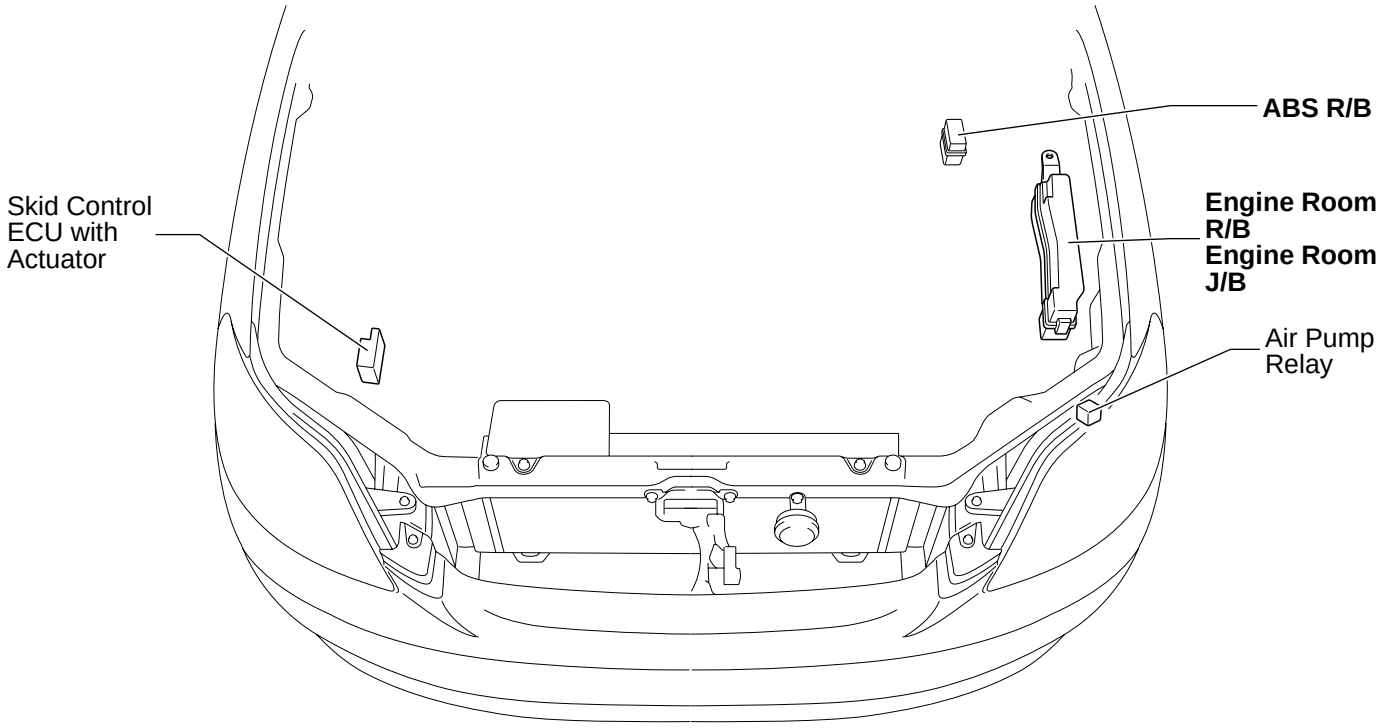

[Instrument Panel]

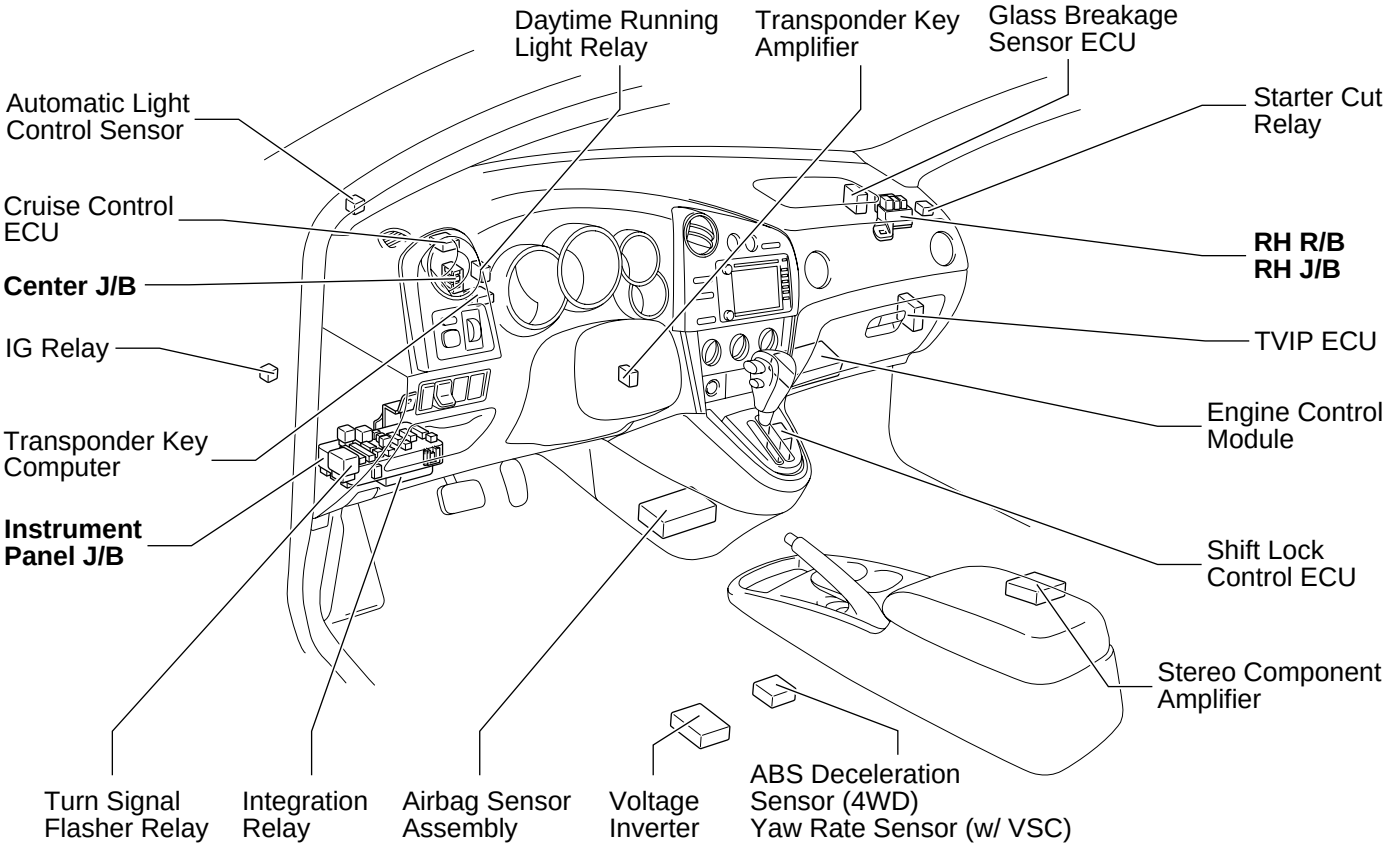

[Body]

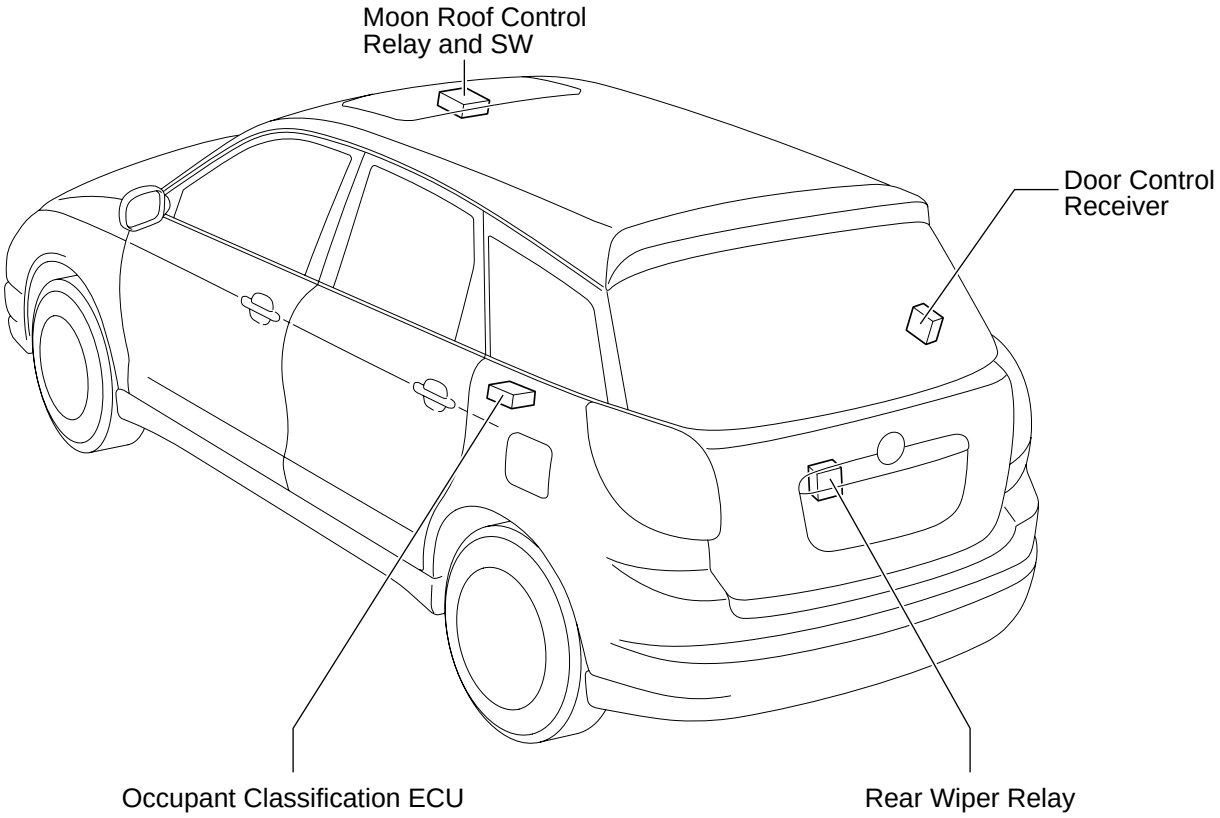
Moon Roof Control
Relay and SW
Door Control
Receiver
Occupant Classification ECU
Rear Wiper Relay

① : Engine Room R/B	Engine Compartment Left (See Page 20)
⬭ : Engine Room J/B	

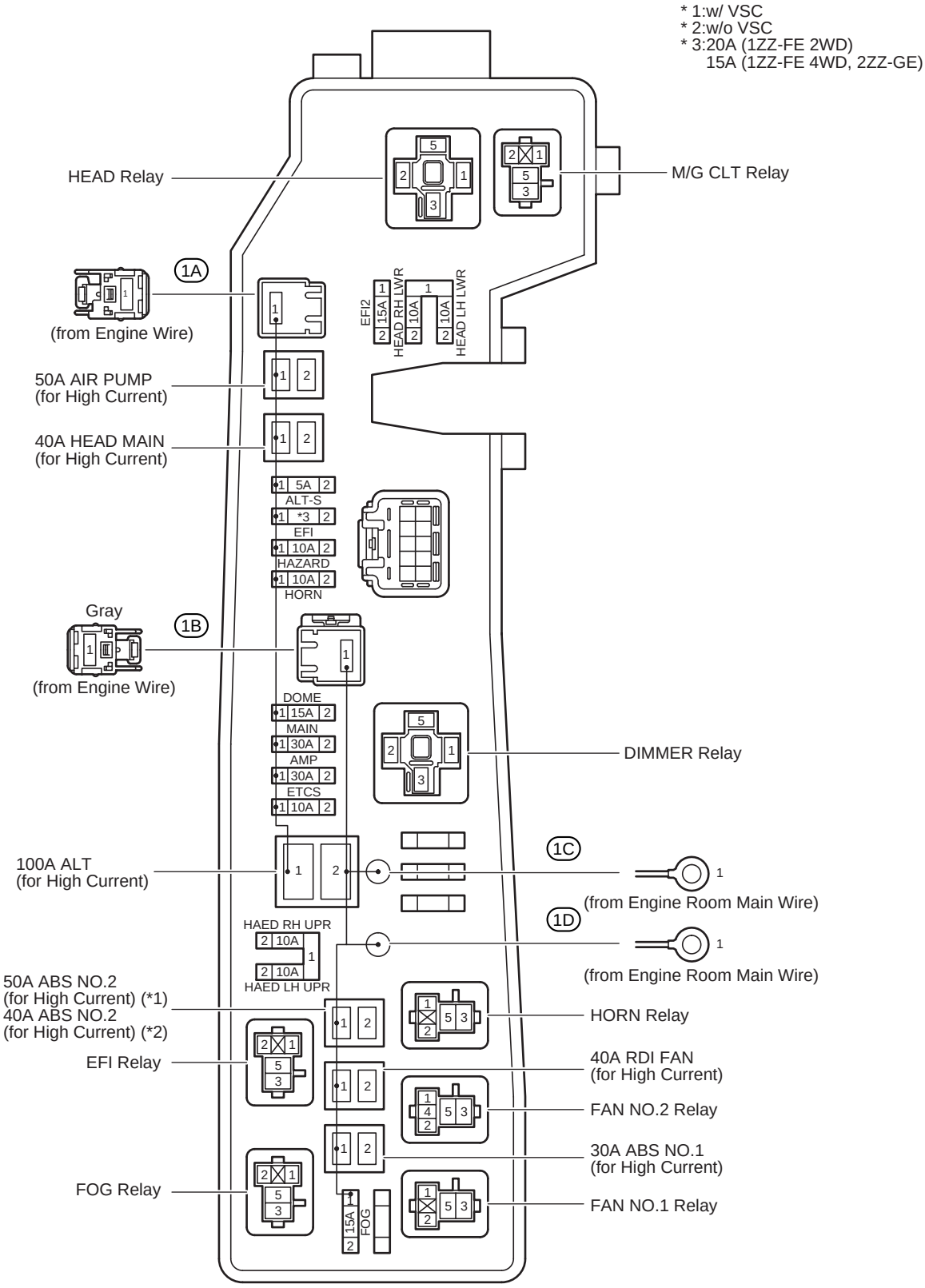

: Instrument Panel J/B	Lower Finish Panel (See Page 21)

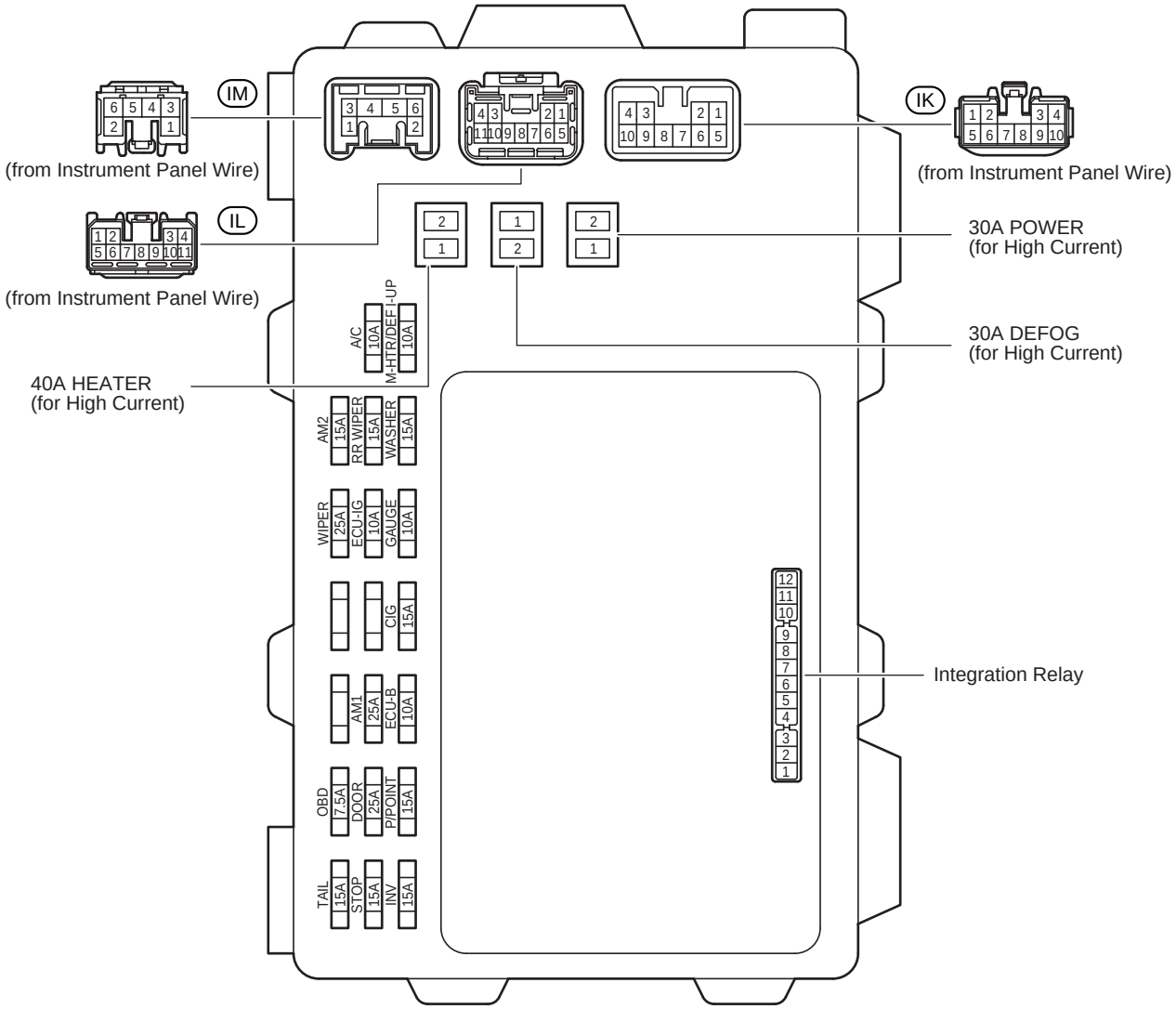

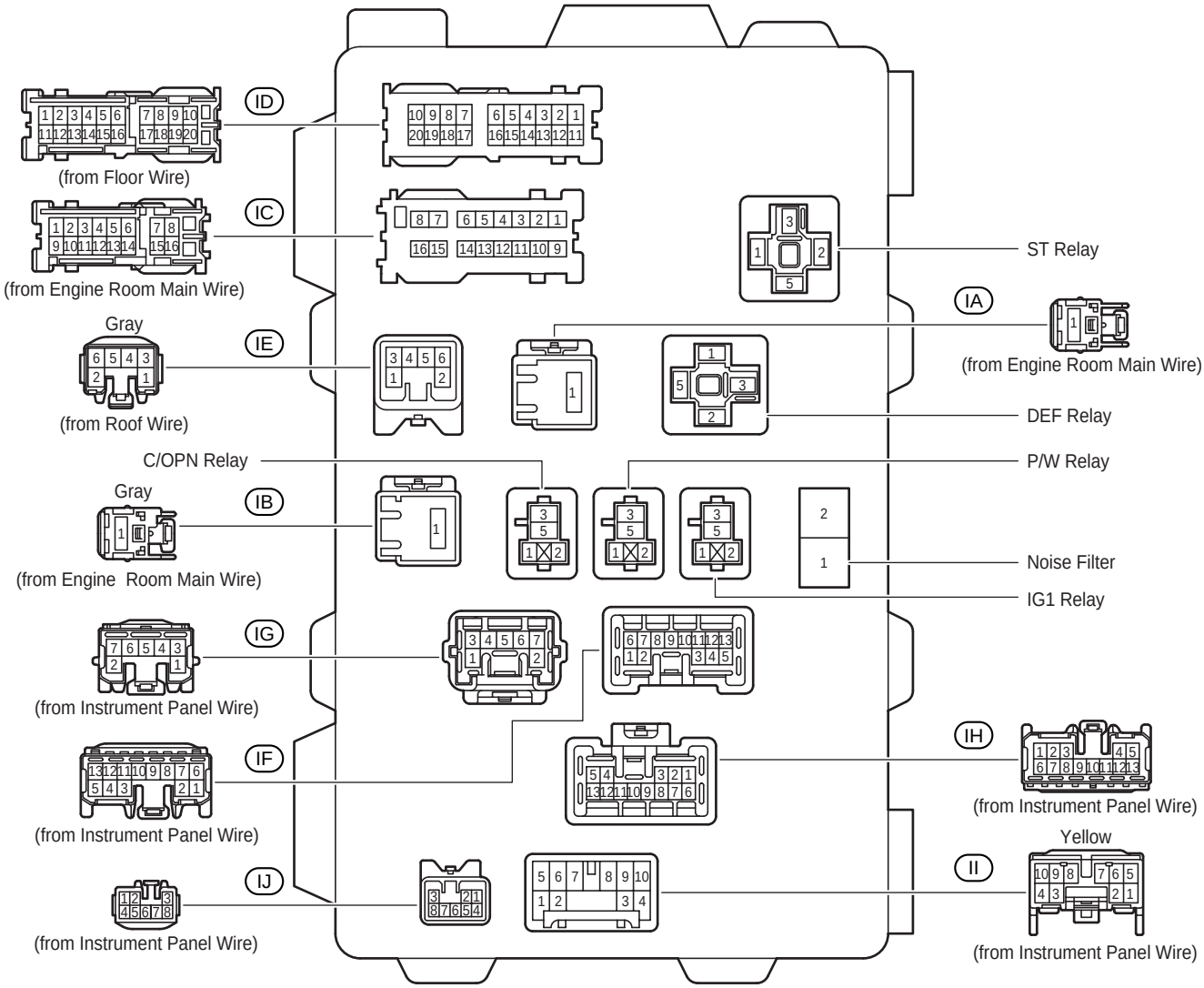
ID
(from Floor Wire)
IC
(from Engine Room Main Wire)
Gray
IE
(from Roof Wire)
C/OPN Relay
Gray
IB
(from Engine Room Main Wire)
IG
(from Instrument Panel Wire)
IF
(from Instrument Panel Wire)
IJ
(from Instrument Panel Wire)
ST Relay
IA
(from Engine Room Main Wire)
DEF Relay
P/W Relay
Noise Filter
IG1 Relay
IH
(from Instrument Panel Wire)
Yellow
II
(from Instrument Panel Wire)

[Instrument Panel J/B Inner Circuit]

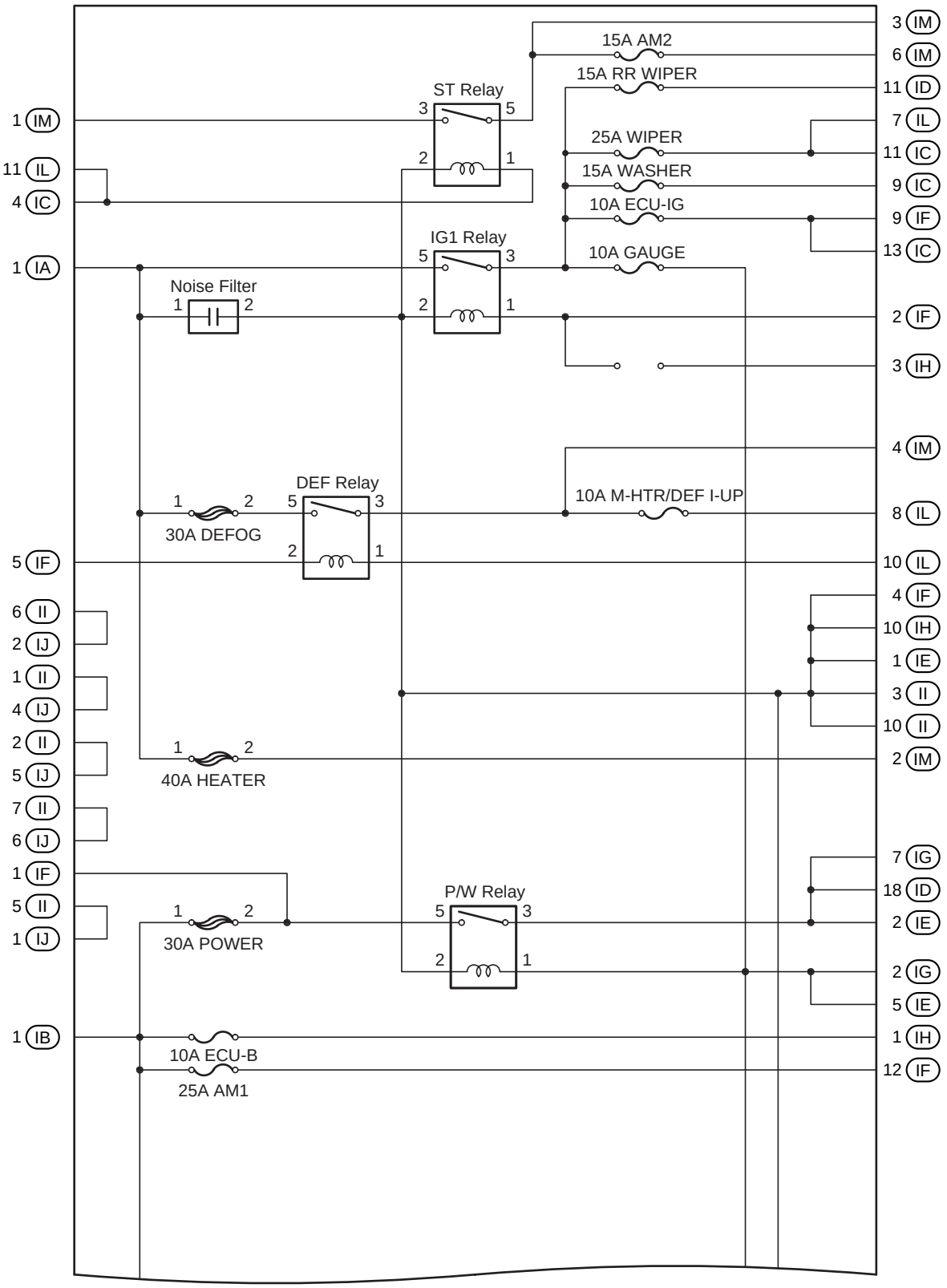

(Cont. Next Page)

(Cont'd)

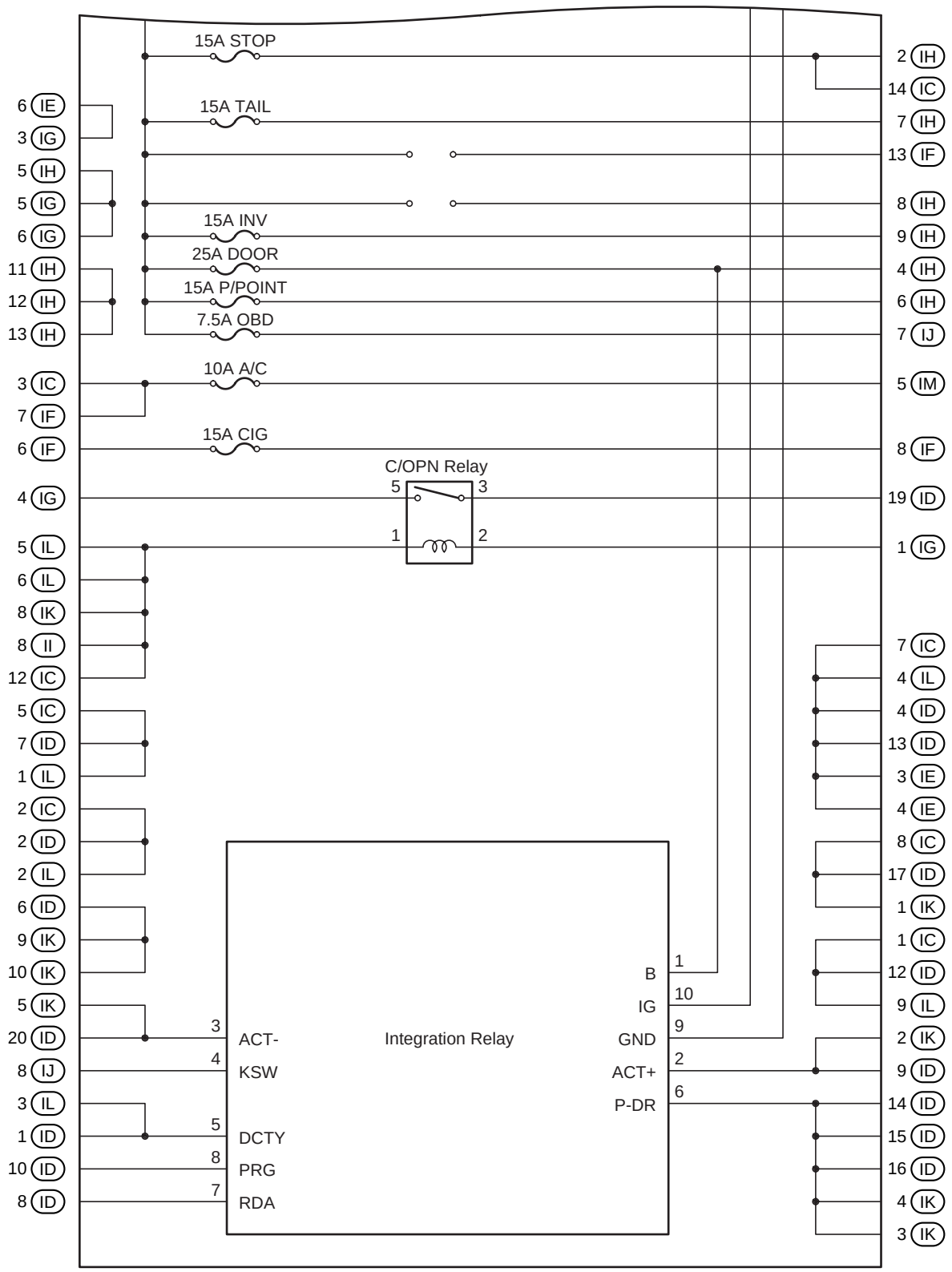
15A STOP
15A TAIL
15A INV
25A DOOR
15A P/POINT
7.5A OBD
10A A/C
15A CIG
C/OPN Relay
Integration Relay
ACT-
KSW
DCTY
PRG
RDA
B
IG
GND
ACT+
P-DR
6 IE
3 IG
5 IH
5 IG
6 IG
11 IH
12 IH
13 IH
3 IC
7 IF
6 IF
4 IG
5 IL
6 IL
8 IK
8 II
12 IC
5 IC
7 ID
1 IL
2 IC
2 ID
2 IL
6 ID
9 IK
10 IK
5 IK
20 ID
8 IJ
3 IL
1 ID
10 ID
8 ID
2 IH
14 IC
7 IH
13 IF
8 IH
9 IH
4 IH
6 IH
7 IJ
5 IM
8 IF
19 ID
1 IG
7 IC
4 IL
4 ID
13 ID
3 IE
4 IE
8 IC
17 ID
1 IK
1 IC
12 ID
9 IL
2 IK
9 ID
14 ID
15 ID
16 ID
4 IK
3 IK

F RELAY LOCATIONS

③ : RH R/B	Right Side of the Instrument Panel Reinforcement (See Page 21)
⬭ : RH J/B	

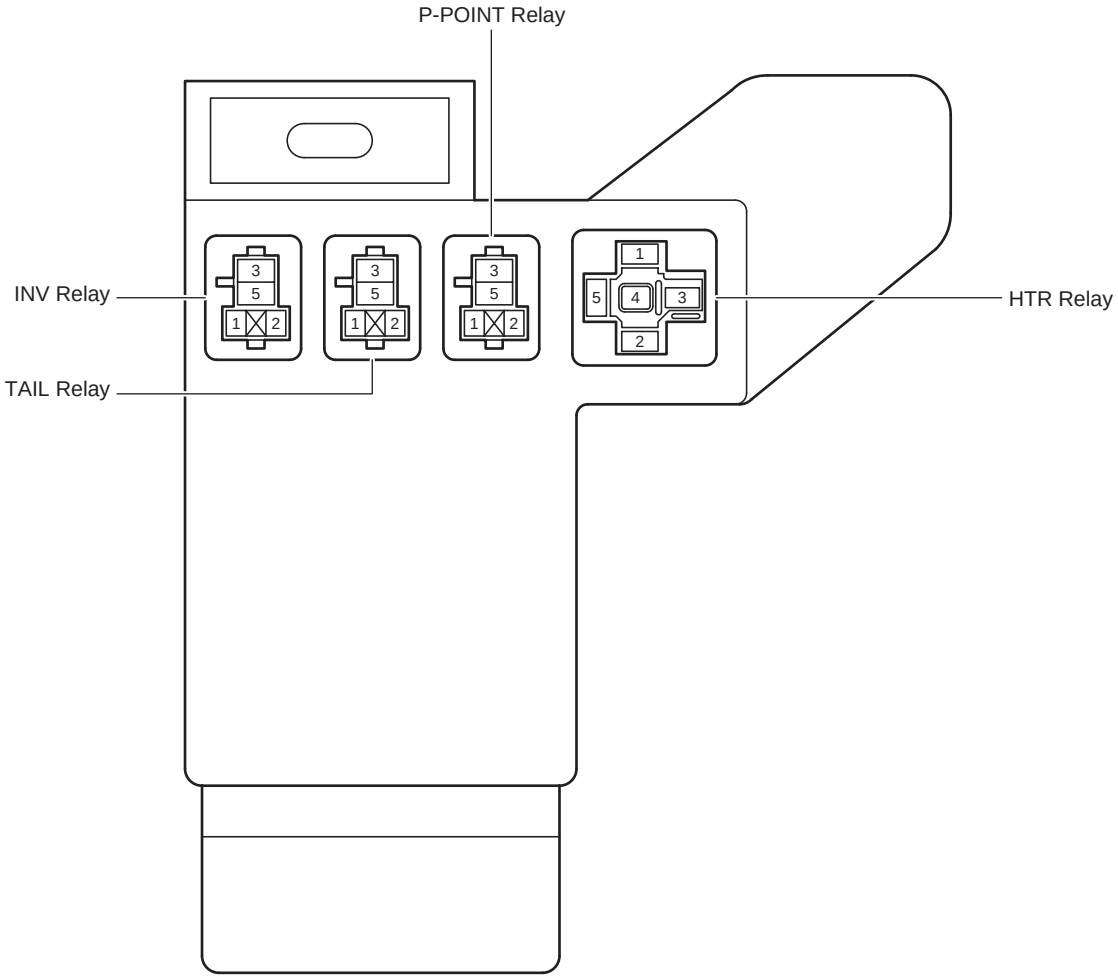

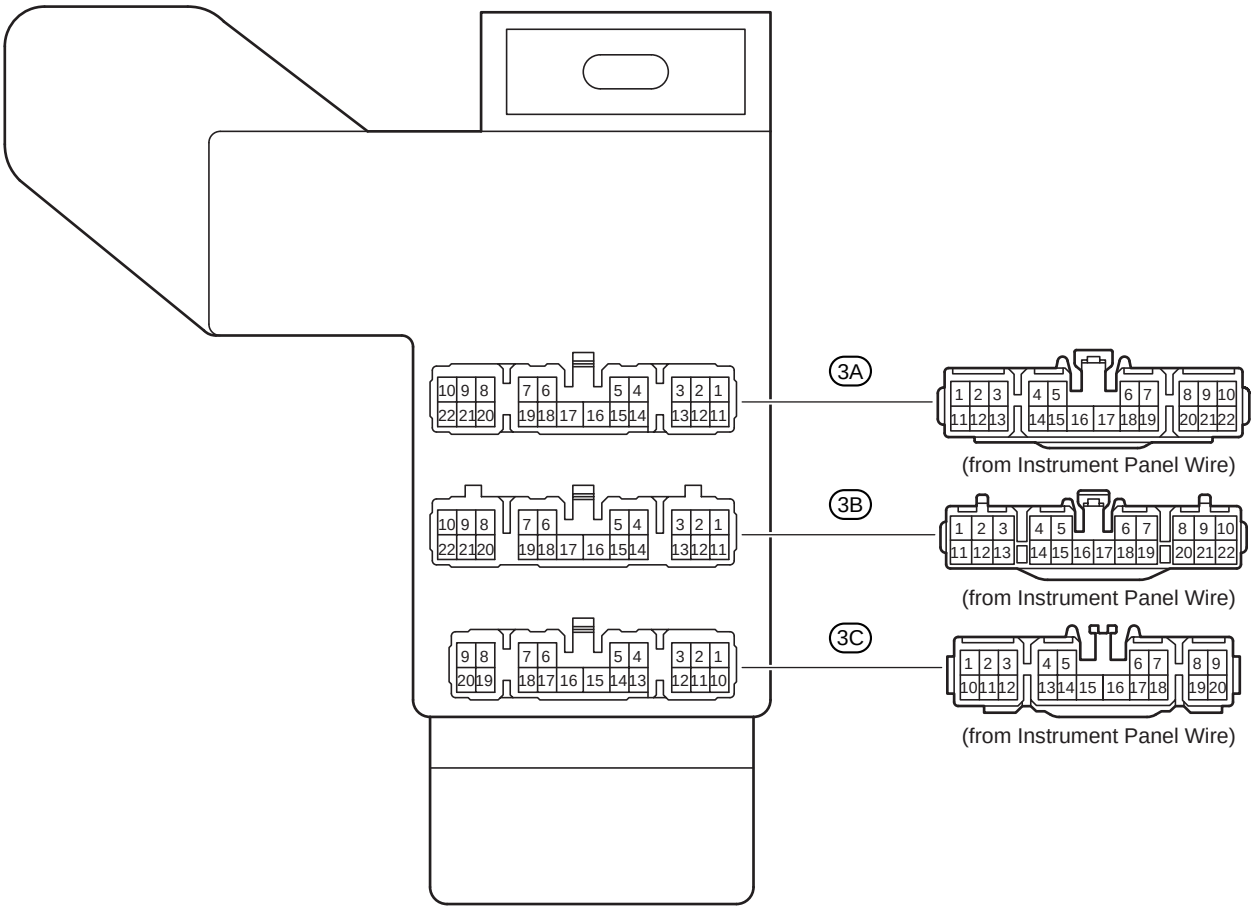
3A
3B
3C
(from Instrument Panel Wire)
(from Instrument Panel Wire)
(from Instrument Panel Wire)

[RH J/B Inner Circuit]

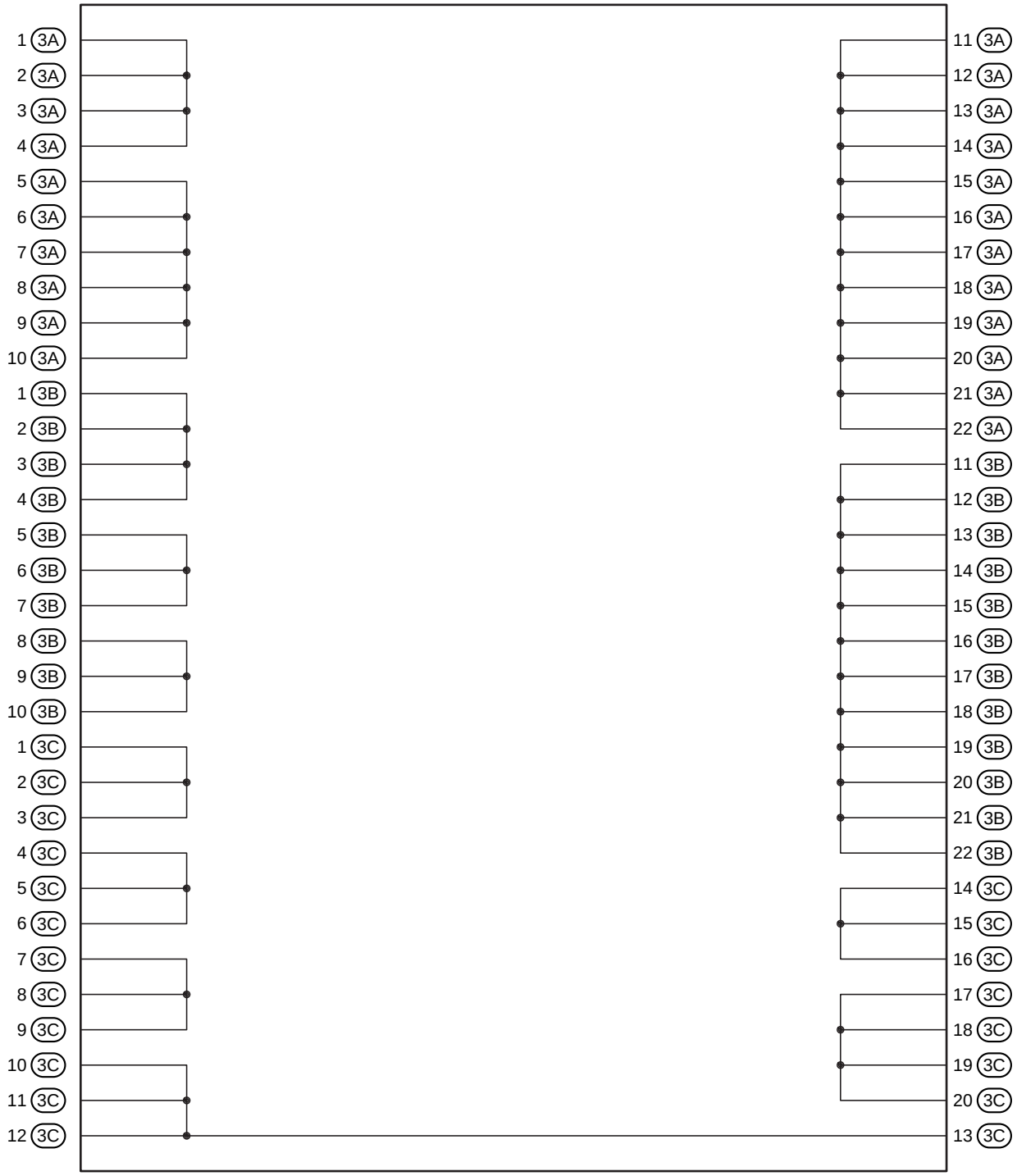

② : ABS R/B	Near the Front Left Suspension Tower (See Page 20)

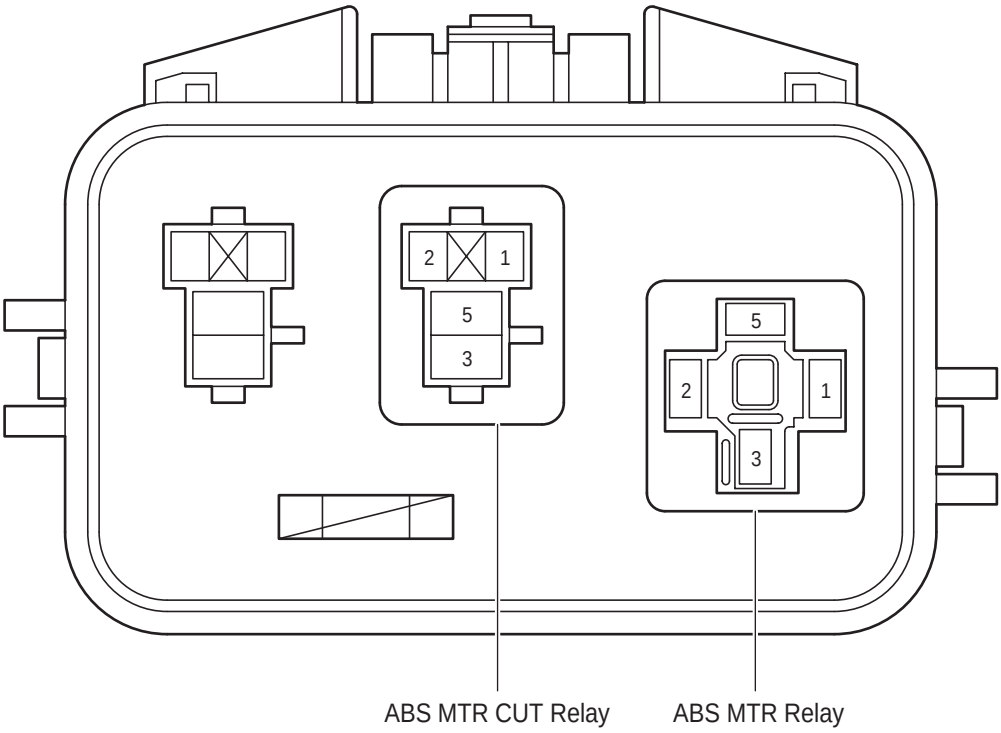

⬭ : Center J/B	Behind the Combination Meter (See Page 21)

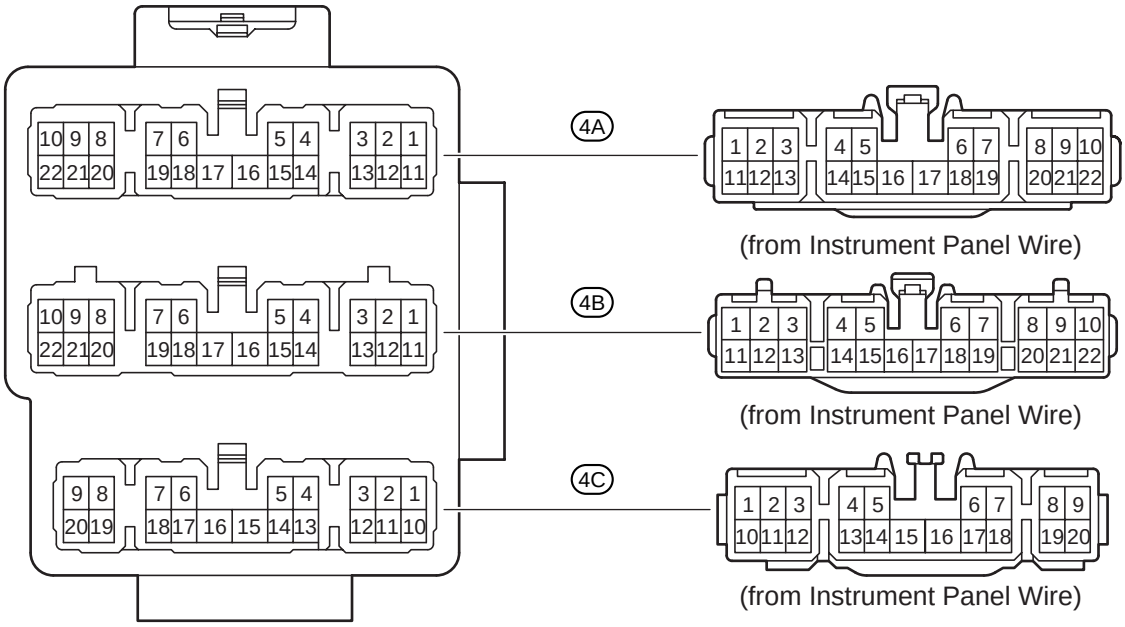

[Center J/B Inner Circuit]

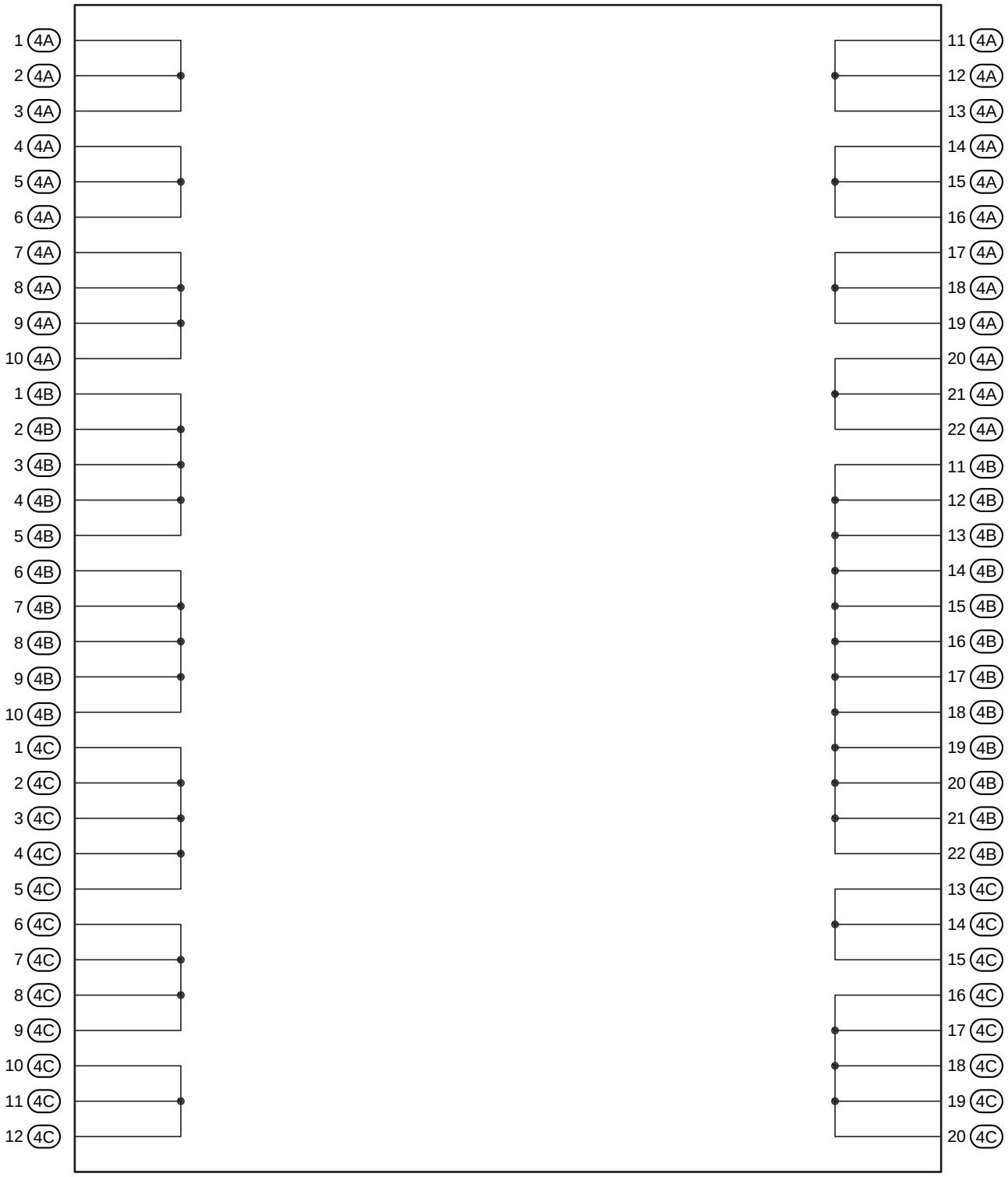

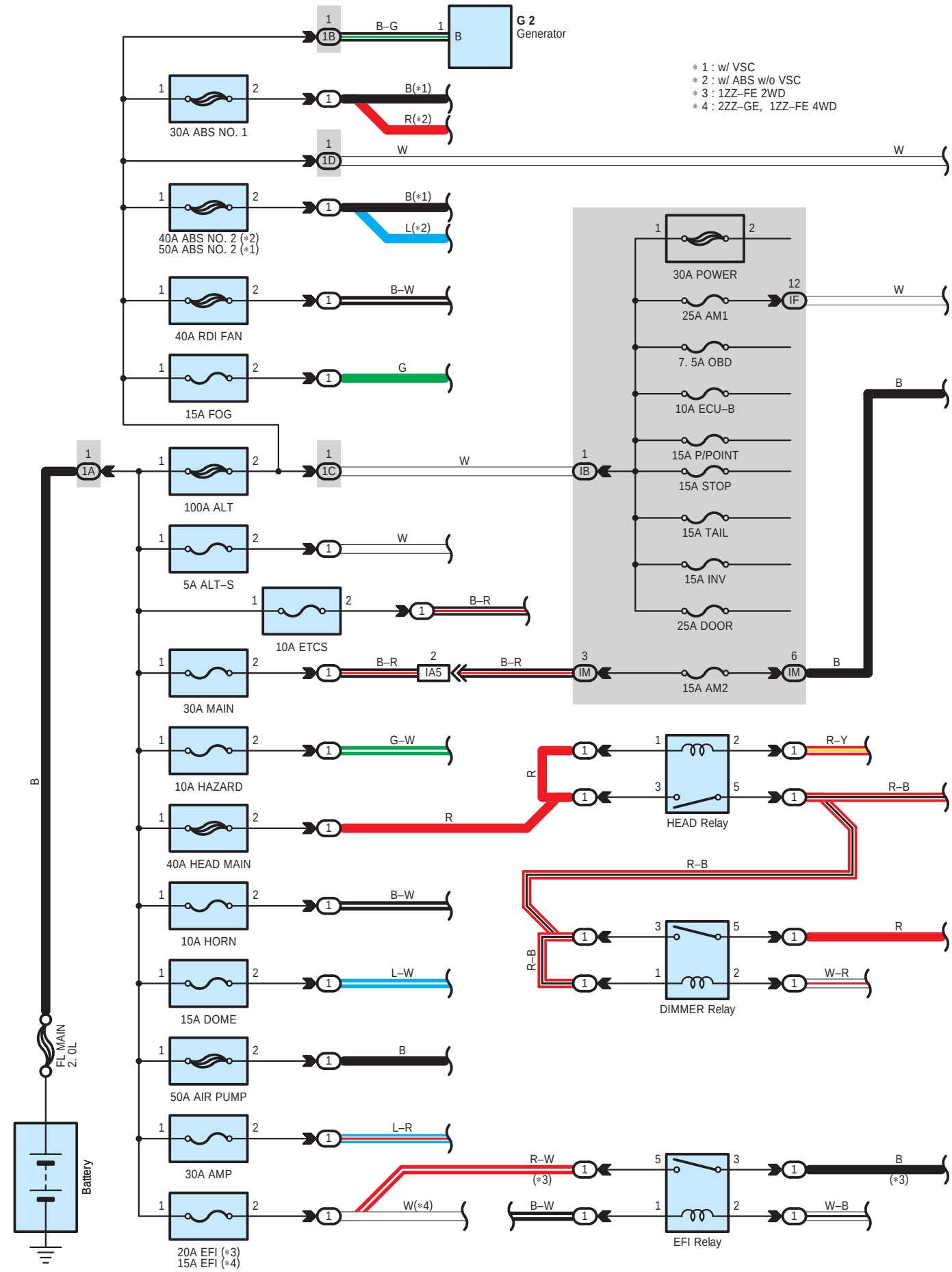
G 2
Generator
B–G
1B
1D
W
B(*1)
R(*2)
L(*2)
B–W
G
30A ABS NO. 1
40A ABS NO. 2 (*2)
50A ABS NO. 2 (*1)
40A RDI FAN
15A FOG
100A ALT
5A ALT–S
10A ETCS
B–R
30A MAIN
IA5
10A HAZARD
G–W
40A HEAD MAIN
R
10A HORN
15A DOME
L–W
50A AIR PUMP
B
30A AMP
L–R
20A EFI (*3)
15A EFI (*4)
W(*4)
30A POWER
25A AM1
7. 5A OBD
10A ECU–B
15A P/POINT
15A STOP
15A TAIL
15A INV
25A DOOR
15A AM2
IB
IF
IM
HEAD Relay
R–Y
R–B
DIMMER Relay
W–R
EFI Relay
R–W
(*3)
W–B
FL MAIN
2. 0L
Battery
1A
1C
* 1 : w/ VSC
* 2 : w/ ABS w/o VSC
* 3 : 1ZZ–FE 2WD
* 4 : 2ZZ–GE, 1ZZ–FE 4WD

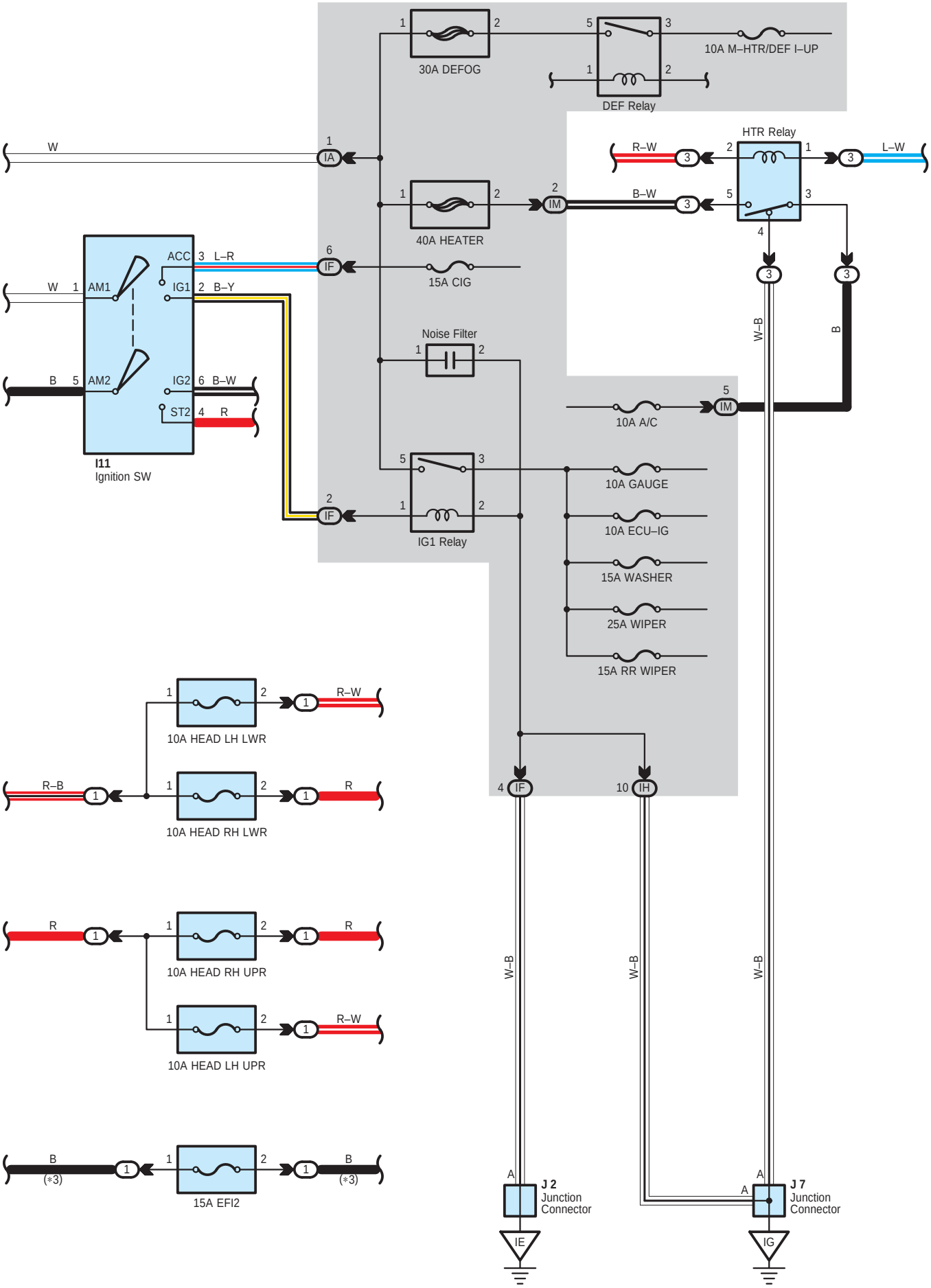
30A DEFOG
10A M–HTR/DEF I–UP
DEF Relay
HTR Relay
R–W
L–W
B–W
W
IA
IM
40A HEATER
15A CIG
IF
ACC
L–R
IG1
B–Y
AM1
AM2
IG2
B–W
ST2
R
I11
Ignition SW
Noise Filter
10A A/C
10A GAUGE
10A ECU–IG
15A WASHER
25A WIPER
15A RR WIPER
IG1 Relay
IH
10A HEAD LH LWR
10A HEAD RH LWR
10A HEAD RH UPR
10A HEAD LH UPR
15A EFI2
(*3)
W–B
B
J 2
Junction
Connector
J 7
Junction
Connector
IE
IG

○ : **Parts Location**

Code	See Page	Code	See Page	Code	See Page
G2	34 (2ZZ–GE)	I11	39	J7	39
	36 (1ZZ–FE)	J2	39		

▭ : **Relay Blocks**

Code	See Page	Relay Blocks (Relay Block Location)
1	23	Engine Room R/B (Engine Compartment Left)
3	28	RH R/B (Right Side of the Instrument Panel Reinforcement)

▭ : **Junction Block and Wire Harness Connector**

Code	See Page	Junction Block and Wire Harness (Connector Location)
IA	25	Engine Room Main Wire and Instrument Panel J/B (Lower Finish Panel)
IB		
IF	25	Instrument Panel Wire and Instrument Panel J/B (Lower Finish Panel)
IH		
IM	24	
1A	23	Engine Wire and Engine Room J/B (Engine Compartment Left)
1B		
1C	23	Engine Room Main Wire and Engine Room J/B (Engine Compartment Left)
1D		

▭ : **Connector Joining Wire Harness and Wire Harness**

Code	See Page	Joining Wire Harness and Wire Harness (Connector Location)
IA5	44	Engine Room Main Wire and Instrument Panel Wire (Instrument Panel Reinforcement LH)

▽ : **Ground Points**

Code	See Page	Ground Points Location
IE	44	Behind Combination Meter
IG	44	Right Kick Panel

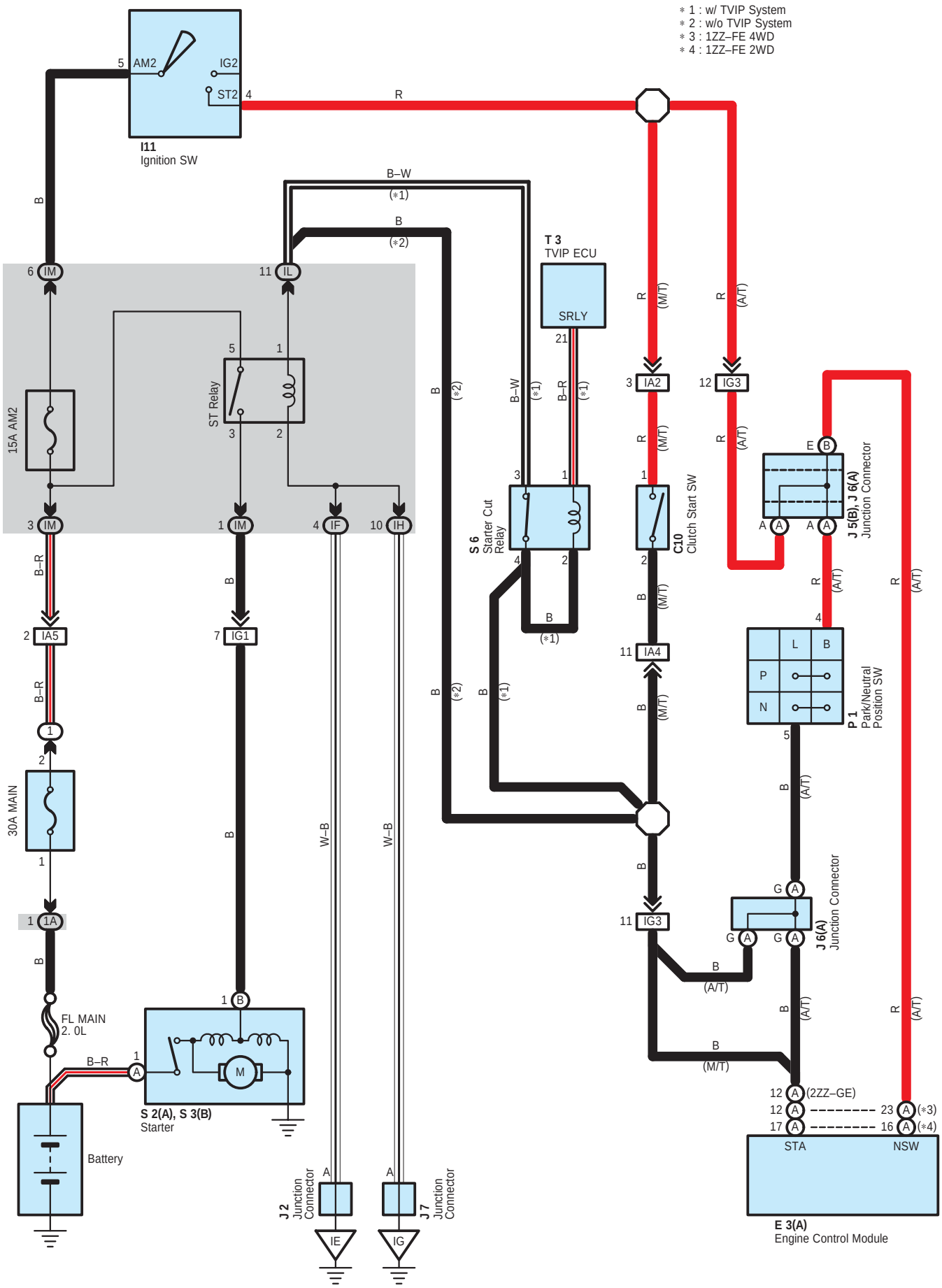
* 1 : w/ TVIP System
* 2 : w/o TVIP System
* 3 : 1ZZ–FE 4WD
* 4 : 1ZZ–FE 2WD
I11
Ignition SW
AM2
IG2
ST2
R
B
B–W
(*1)
(*2)
T 3
TVIP ECU
SRLY
IM
IL
ST Relay
15A AM2
IF
IH
B–R
IA5
IG1
30A MAIN
1A
FL MAIN
2. 0L
Battery
S 2(A), S 3(B)
Starter
W–B
J 2
Junction
Connector
J 7
Junction
Connector
IE
IG
IA2
IG3
(M/T)
(A/T)
S 6
Starter Cut
Relay
C10
Clutch Start SW
IA4
J 5(B), J 6(A)
Junction Connector
P 1
Park/Neutral
Position SW
J 6(A)
Junction Connector
(2ZZ–GE)
STA
NSW
E 3(A)
Engine Control Module

: Parts Location

Code		See Page	Code		See Page	Code		See Page
C10		38	J6	A	39	S3	B	35 (2ZZ–GE)
E3	A	38	J7		39			37 (1ZZ–FE)
I11		39	P1		37 (1ZZ–FE)	S6		39
J2		39	S2	A	35 (2ZZ–GE)	T3		39
J5	B	39			37 (1ZZ–FE)			

: Relay Blocks

Code	See Page	Relay Blocks (Relay Block Location)
1	23	Engine Room R/B (Engine Compartment Left)

: Junction Block and Wire Harness Connector

Code	See Page	Junction Block and Wire Harness (Connector Location)
IF	25	Instrument Panel Wire and Instrument Panel J/B (Lower Finish Panel)
IH		
IL	24	
IM		
1A	23	Engine Wire and Engine Room J/B (Engine Compartment Left)

: Connector Joining Wire Harness and Wire Harness

Code	See Page	Joining Wire Harness and Wire Harness (Connector Location)
IA2	44	Engine Room Main Wire and Instrument Panel Wire (Instrument Panel Reinforcement LH)
IA4		
IA5		
IG1	45	Engine Wire and Instrument Panel Wire (Blower Unit RH)
IG3		

: Ground Points

Code	See Page	Ground Points Location
IE	44	Behind Combination Meter
IG	44	Right Kick Panel

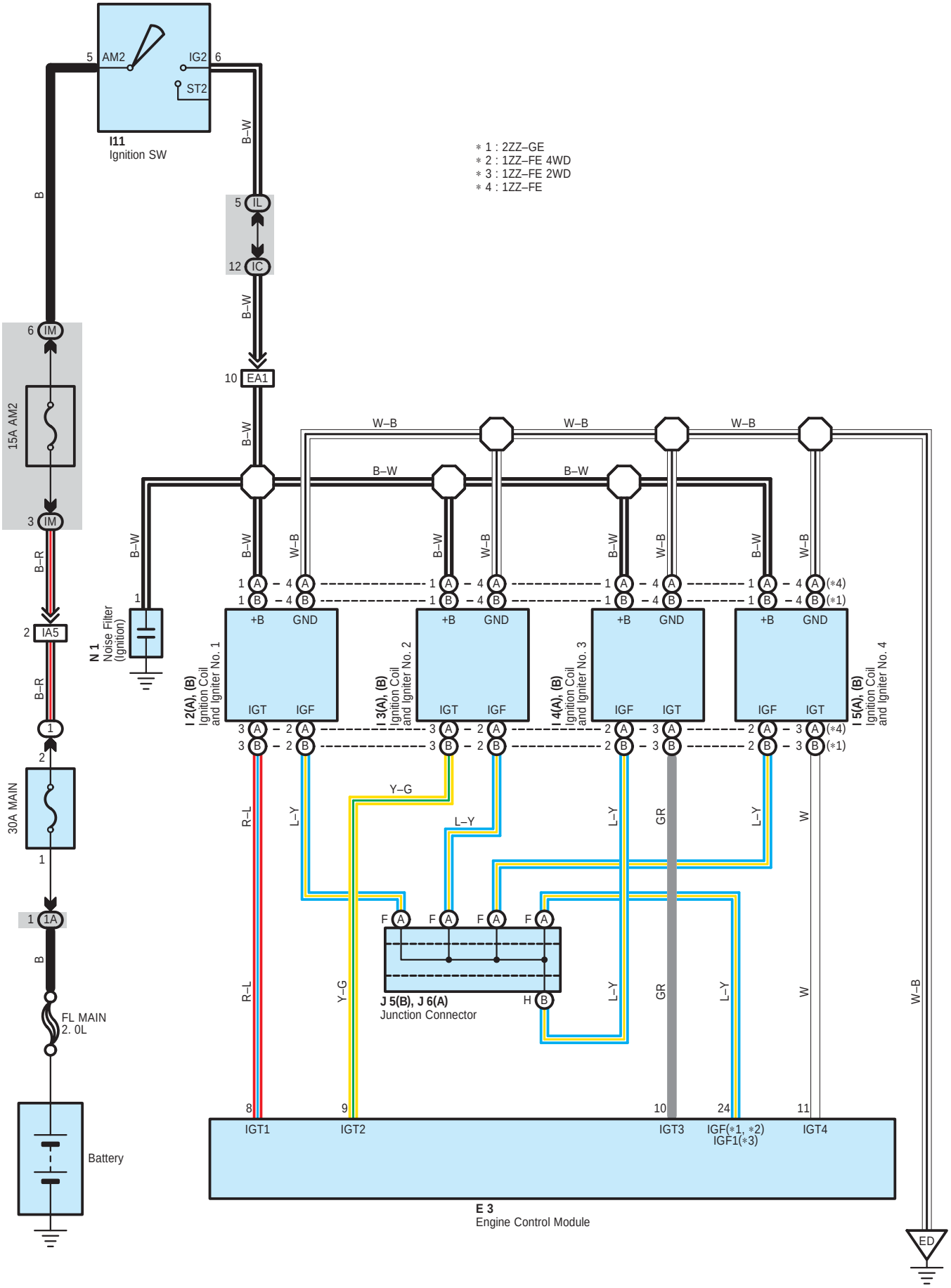
I11
Ignition SW
AM2
IG2
ST2
B–W
B
IL
IC
IM
EA1
15A AM2
B–R
IA5
N 1
Noise Filter
(Ignition)
30A MAIN
1A
FL MAIN
2. 0L
Battery
W–B
+B
GND
IGT
IGF
I 2(A), (B)
Ignition Coil
and Igniter No. 1
I 3(A), (B)
Ignition Coil
and Igniter No. 2
I 4(A), (B)
Ignition Coil
and Igniter No. 3
I 5(A), (B)
Ignition Coil
and Igniter No. 4
(*4)
(*1)
R–L
L–Y
Y–G
GR
W
J 5(B), J 6(A)
Junction Connector
IGT1
IGT2
IGT3
IGF(*1, *2)
IGF1(*3)
IGT4
E 3
Engine Control Module
ED
* 1 : 2ZZ–GE
* 2 : 1ZZ–FE 4WD
* 3 : 1ZZ–FE 2WD
* 4 : 1ZZ–FE

: Parts Location

Code		See Page	Code		See Page	Code		See Page
E3		38	I4	A	37 (1ZZ–FE)	J5	B	39
I2	A	37 (1ZZ–FE)		B	35 (2ZZ–GE)	J6	A	39
	B	35 (2ZZ–GE)	I5	A	37 (1ZZ–FE)	N1		35 (2ZZ–GE)
I3	A	37 (1ZZ–FE)		B	35 (2ZZ–GE)			37 (1ZZ–FE)
	B	35 (2ZZ–GE)	I11		39			

: Relay Blocks

Code	See Page	Relay Blocks (Relay Block Location)
1	23	Engine Room R/B (Engine Compartment Left)

: Junction Block and Wire Harness Connector

Code	See Page	Junction Block and Wire Harness (Connector Location)
IC	25	Engine Room Main Wire and Instrument Panel J/B (Lower Finish Panel)
IL	24	Instrument Panel Wire and Instrument Panel J/B (Lower Finish Panel)
IM		
1A	23	Engine Wire and Engine Room J/B (Engine Compartment Left)

: Connector Joining Wire Harness and Wire Harness

Code	See Page	Joining Wire Harness and Wire Harness (Connector Location)
EA1	42 (2ZZ–GE)	Engine Wire and Engine Room Main Wire (Inside of the Engine Room R/B)
	43 (1ZZ–FE)	
IA5	44	Engine Room Main Wire and Instrument Panel Wire (Instrument Panel Reinforcement LH)

: Ground Points

Code	See Page	Ground Points Location
ED	42 (2ZZ–GE)	Left Side of the Cylinder Head
	43 (1ZZ–FE)	

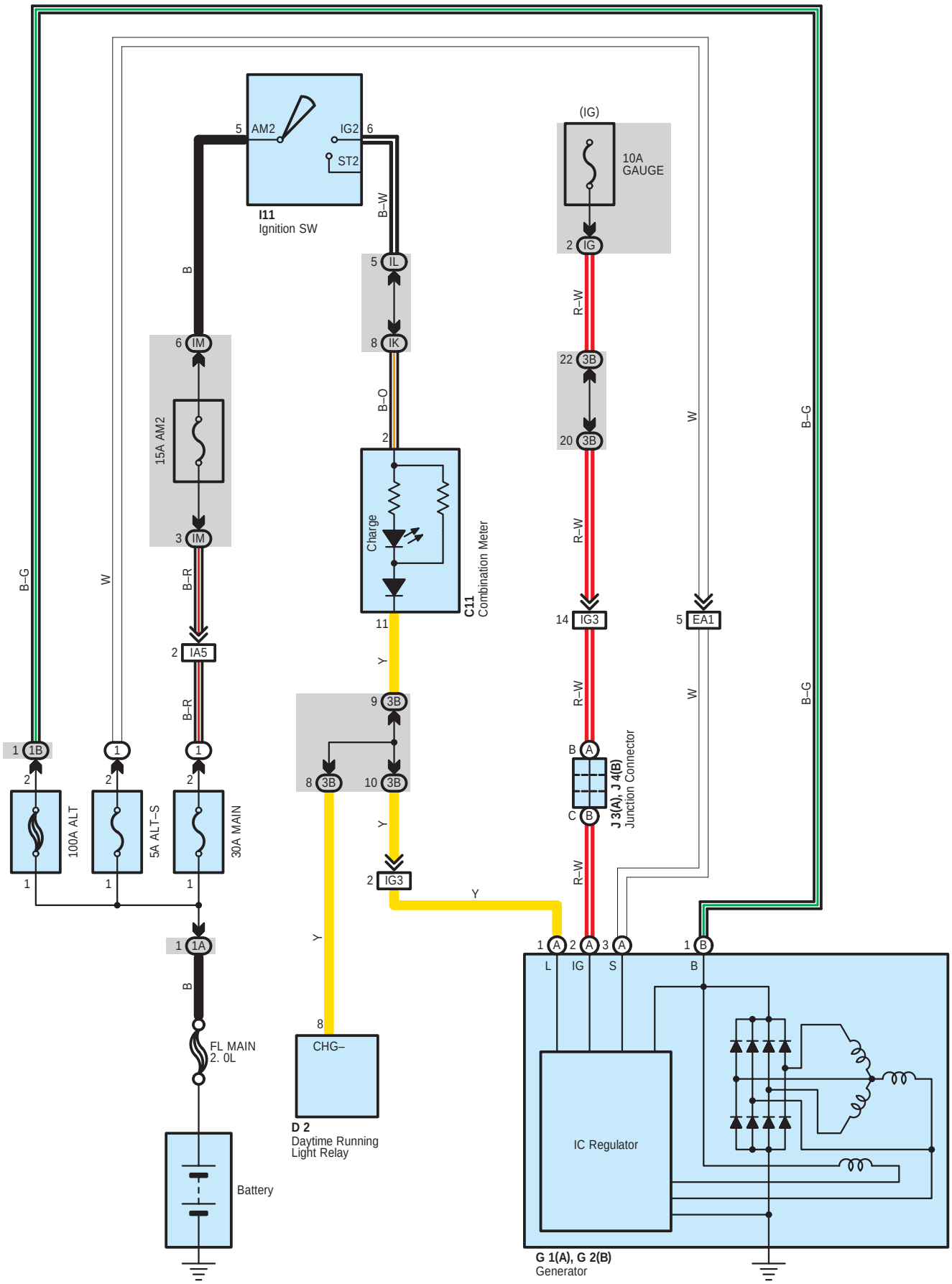
I11
Ignition SW
5 AM2
IG2 6
ST2
B–W
(IG)
10A
GAUGE
2 IG
5 IL
8 IK
B–O
2
Charge
C11
Combination Meter
11
Y
9 3B
8 3B
10 3B
Y
2 IG3
Y
B
6 IM
15A AM2
3 IM
B–R
2 IA5
B–R
1 1B
2
100A ALT
1
1
2
5A ALT–S
1
1
2
30A MAIN
1
1 1A
B
FL MAIN
2. 0L
Battery
8
CHG–
D 2
Daytime Running
Light Relay
R–W
22 3B
20 3B
R–W
14 IG3
R–W
B A
C B
J 3(A), J 4(B)
Junction Connector
R–W
W
5 EA1
W
B–G
B–G
B–G
W
1 A 2 A 3 A
L IG S
1 B
B
IC Regulator
G 1(A), G 2(B)
Generator

: Parts Location

Code		See Page	Code		See Page	Code		See Page
C11		38	G1	A	36 (1ZZ–FE)	I11		39
D2		38	G2	B	34 (2ZZ–GE)	J3	A	39
G1	A	34 (2ZZ–GE)			36 (1ZZ–FE)	J4	B	39

: Relay Blocks

Code	See Page	Relay Blocks (Relay Block Location)
1	23	Engine Room R/B (Engine Compartment Left)

: Junction Block and Wire Harness Connector

Code	See Page	Junction Block and Wire Harness (Connector Location)
IG	25	Instrument Panel Wire and Instrument Panel J/B (Lower Finish Panel)
IK	24	
IL		
IM		
1A	23	Engine Wire and Engine Room J/B (Engine Compartment Left)
1B		
3B	29	Instrument Panel Wire and RH J/B (Right Side of the Instrument Panel Reinforcement)

: Connector Joining Wire Harness and Wire Harness

Code	See Page	Joining Wire Harness and Wire Harness (Connector Location)
EA1	42 (2ZZ–GE)	Engine Wire and Engine Room Main Wire (Inside of the Engine Room R/B)
	43 (1ZZ–FE)	
IA5	44	Engine Room Main Wire and Instrument Panel Wire (Instrument Panel Reinforcement LH)
IG3	45	Engine Wire and Instrument Panel Wire (Blower Unit RH)

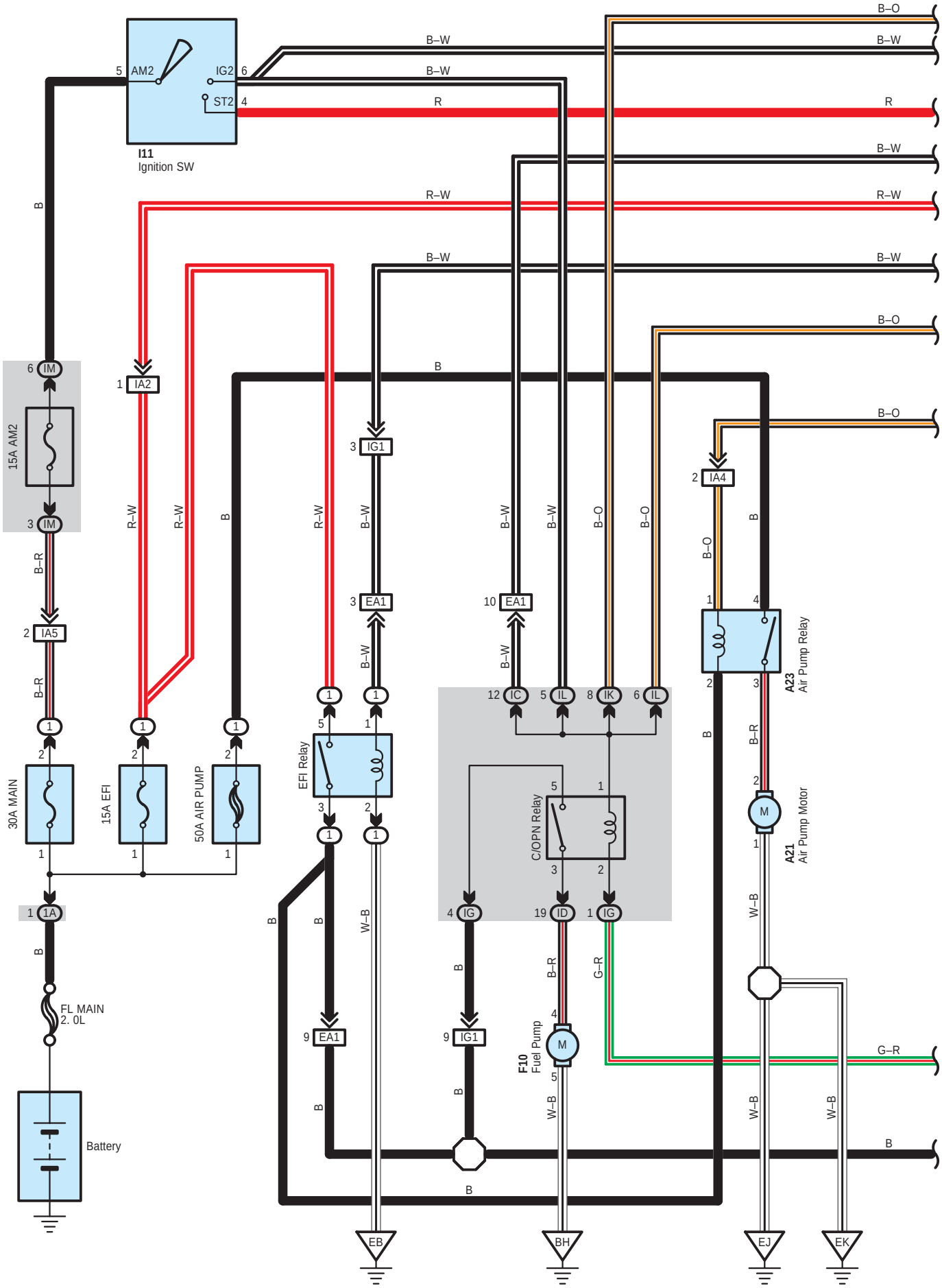
I11
Ignition SW
AM2
IG2
ST2
15A AM2
IM
IA2
IA5
IG1
EA1
IA4
30A MAIN
15A EFI
50A AIR PUMP
EFI Relay
C/OPN Relay
A23
Air Pump Relay
A21
Air Pump Motor
F10
Fuel Pump
FL MAIN
2. 0L
Battery
IC
IL
IK
IG
ID
EB
BH
EJ
EK
B–O
B–W
R
R–W
B
B–R
W–B
G–R

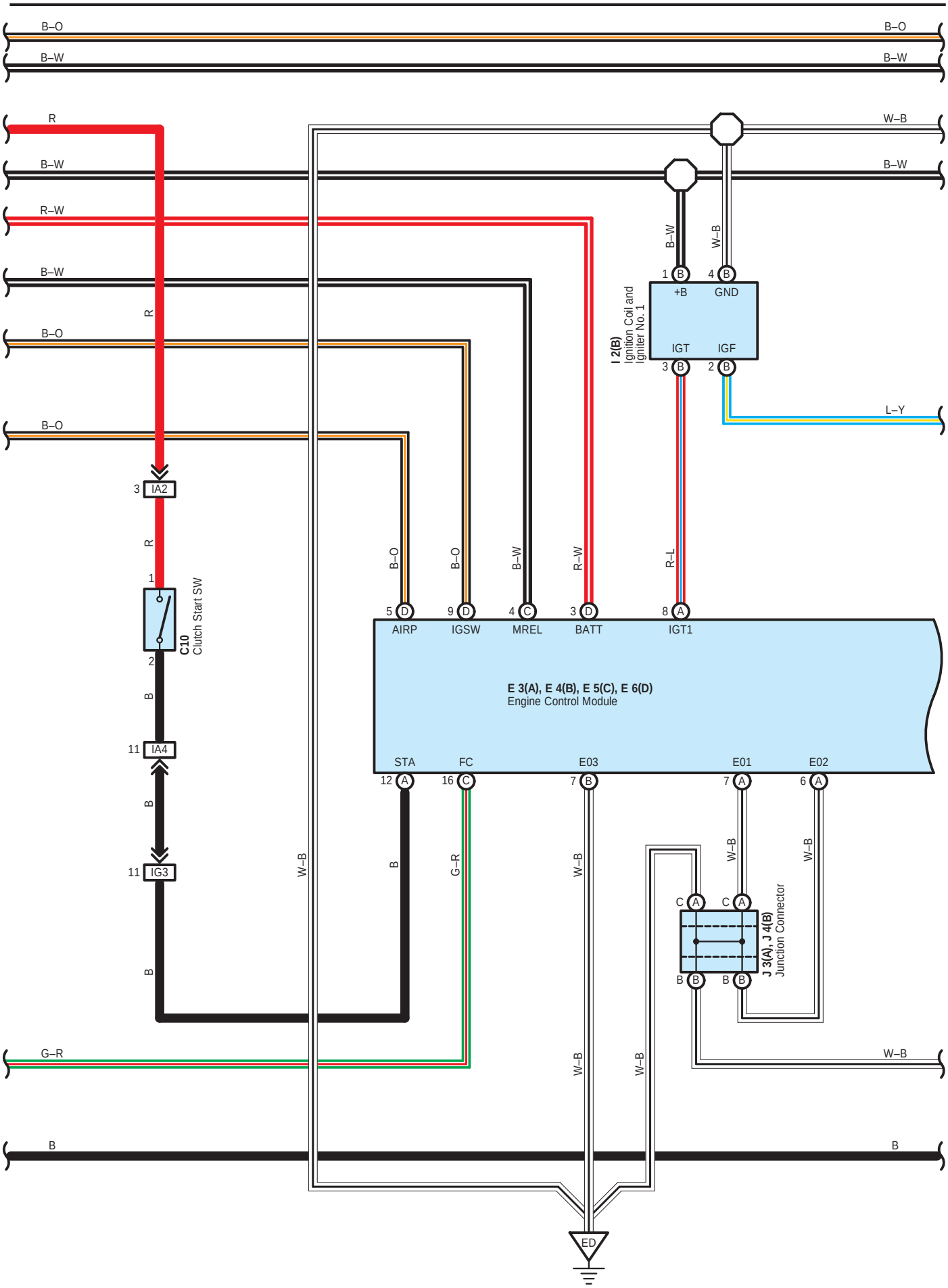
B–O
B–W
R
R–W
W–B
L–Y
G–R
B
3 IA2
11 IA4
11 IG3
1
2
C10
Clutch Start SW
I 2(B)
Ignition Coil and Igniter No. 1
1 B +B
4 B GND
3 B IGT
2 B IGF
5 D AIRP
9 D IGSW
4 C MREL
3 D BATT
8 A IGT1
E 3(A), E 4(B), E 5(C), E 6(D)
Engine Control Module
12 A STA
16 C FC
7 B E03
7 A E01
6 A E02
C A
B B
J 3(A), J 4(B)
Junction Connector
ED

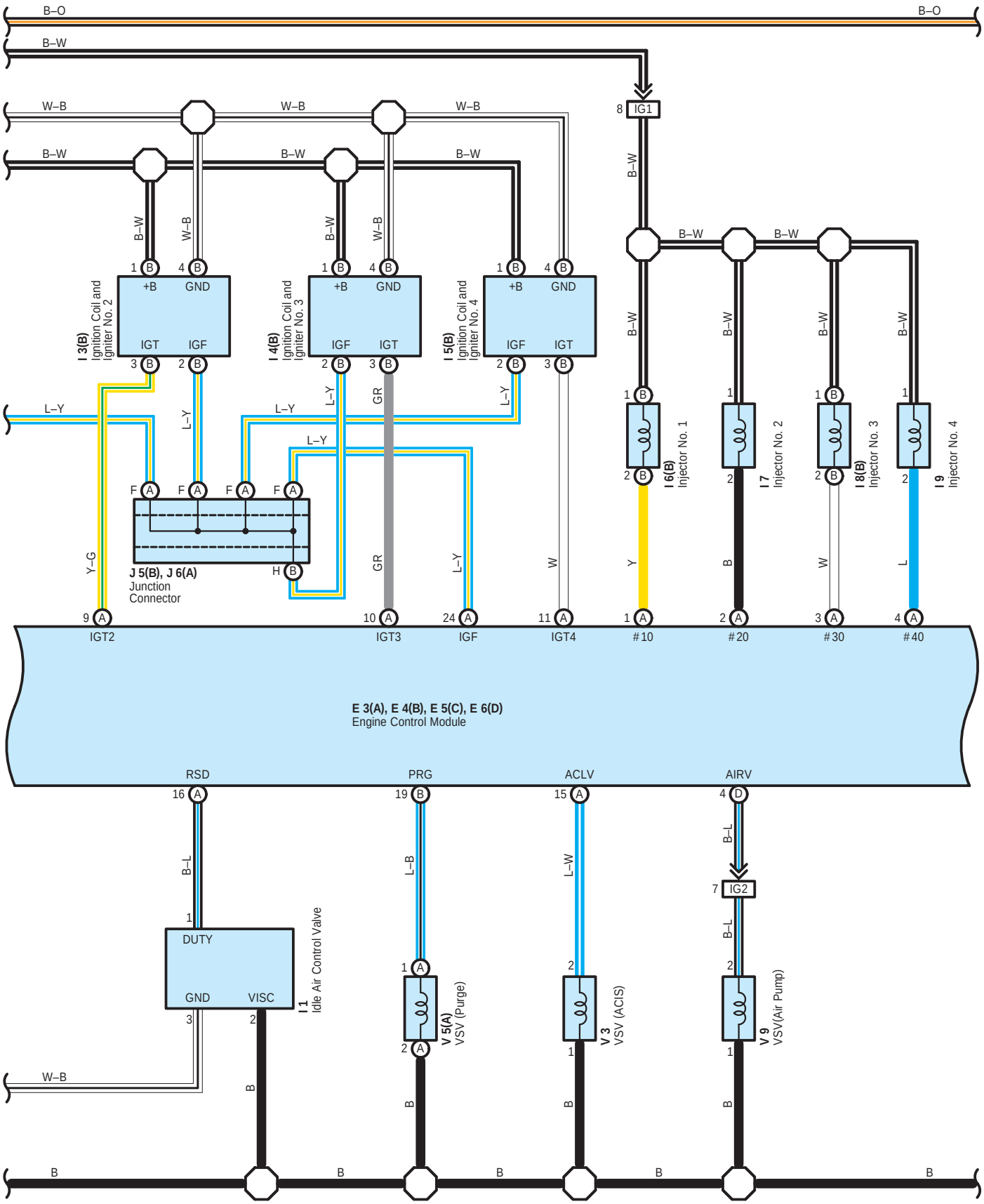
B–O
B–W
W–B
8 IG1
I 3(B) Ignition Coil and Igniter No. 2
I 4(B) Ignition Coil and Igniter No. 3
I 5(B) Ignition Coil and Igniter No. 4
+B
GND
IGT
IGF
L–Y
GR
Y–G
J 5(B), J 6(A) Junction Connector
I 6(B) Injector No. 1
I 7 Injector No. 2
I 8(B) Injector No. 3
I 9 Injector No. 4
Y
B
W
L
IGT2
IGT3
IGF
IGT4
#10
#20
#30
#40
E 3(A), E 4(B), E 5(C), E 6(D) Engine Control Module
RSD
PRG
ACLV
AIRV
B–L
L–B
L–W
7 IG2
DUTY
GND
VISC
I 1 Idle Air Control Valve
V 5(A) VSV (Purge)
V 3 VSV (ACIS)
V 9 VSV(Air Pump)

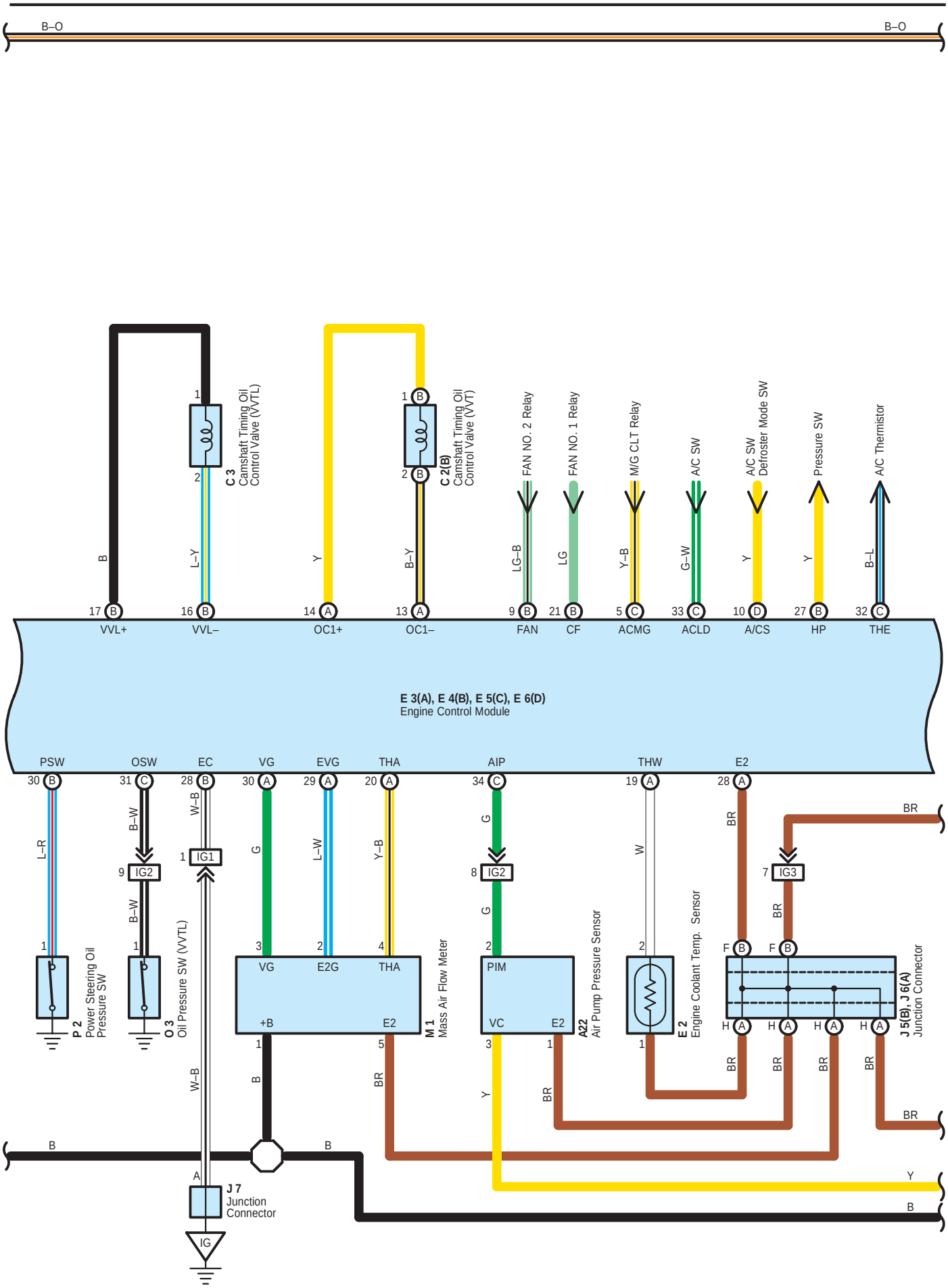
B–O
B–O
C 3
Camshaft Timing Oil Control Valve (VVTL)
C 2(B)
Camshaft Timing Oil Control Valve (VVT)
FAN NO. 2 Relay
FAN NO. 1 Relay
M/G CLT Relay
A/C SW
A/C SW Defroster Mode SW
Pressure SW
A/C Thermistor
VVL+
VVL–
OC1+
OC1–
FAN
CF
ACMG
ACLD
A/CS
HP
THE
E 3(A), E 4(B), E 5(C), E 6(D)
Engine Control Module
PSW
OSW
EC
VG
EVG
THA
AIP
THW
E2
IG1
IG2
IG3
P 2
Power Steering Oil Pressure SW
O 3
Oil Pressure SW (VVTL)
M 1
Mass Air Flow Meter
A22
Air Pump Pressure Sensor
E 2
Engine Coolant Temp. Sensor
J 5(B), J 6(A)
Junction Connector
J 7
Junction Connector
IG

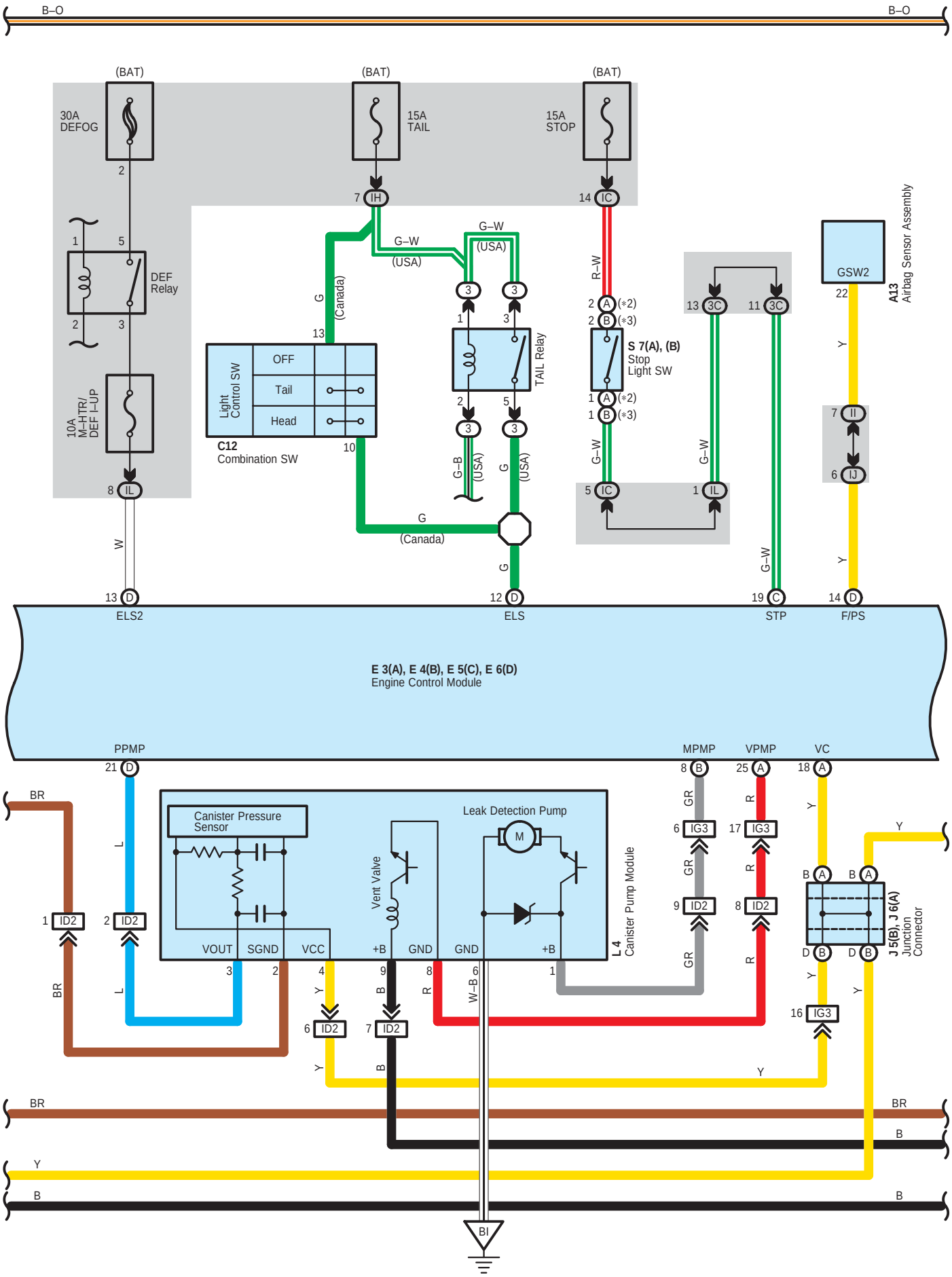
B–O
B–O
(BAT)
30A
DEFOG
(BAT)
15A
TAIL
(BAT)
15A
STOP
DEF
Relay
10A
M–HTR/
DEF I–UP
Light
Control SW
OFF
Tail
Head
C12
Combination SW
TAIL Relay
S 7(A), (B)
Stop
Light SW
GSW2
A13
Airbag Sensor Assembly
E 3(A), E 4(B), E 5(C), E 6(D)
Engine Control Module
ELS2
ELS
STP
F/PS
PPMP
MPMP
VPMP
VC
Canister Pressure
Sensor
Leak Detection Pump
Vent Valve
VOUT
SGND
VCC
+B
GND
GND
+B
L 4
Canister Pump Module
J 5(B), J 6(A)
Junction
Connector
BR
BR
B
Y
B
BI

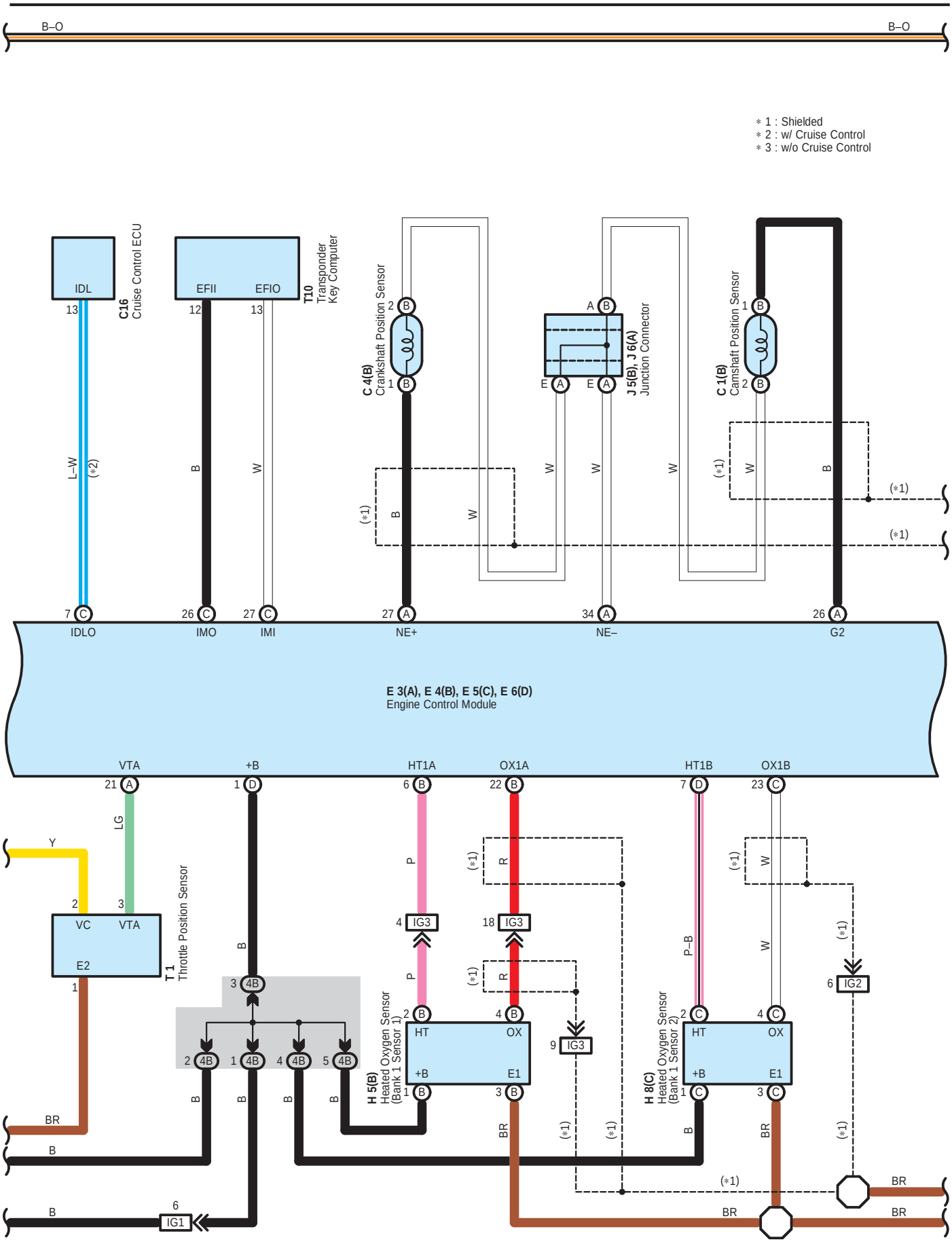
B–O
B–O
∗1 : Shielded
∗2 : w/ Cruise Control
∗3 : w/o Cruise Control
IDL
C16
Cruise Control ECU
EFII
EFIO
T10
Transponder Key Computer
C 4(B)
Crankshaft Position Sensor
J 5(B), J 6(A)
Junction Connector
C 1(B)
Camshaft Position Sensor
IDLO
IMO
IMI
NE+
NE–
G2
E 3(A), E 4(B), E 5(C), E 6(D)
Engine Control Module
VTA
+B
HT1A
OX1A
HT1B
OX1B
VC
VTA
E2
T 1
Throttle Position Sensor
IG3
IG2
IG1
H 5(B)
Heated Oxygen Sensor (Bank 1 Sensor 1)
H 8(C)
Heated Oxygen Sensor (Bank 1 Sensor 2)
HT
OX
+B
E1

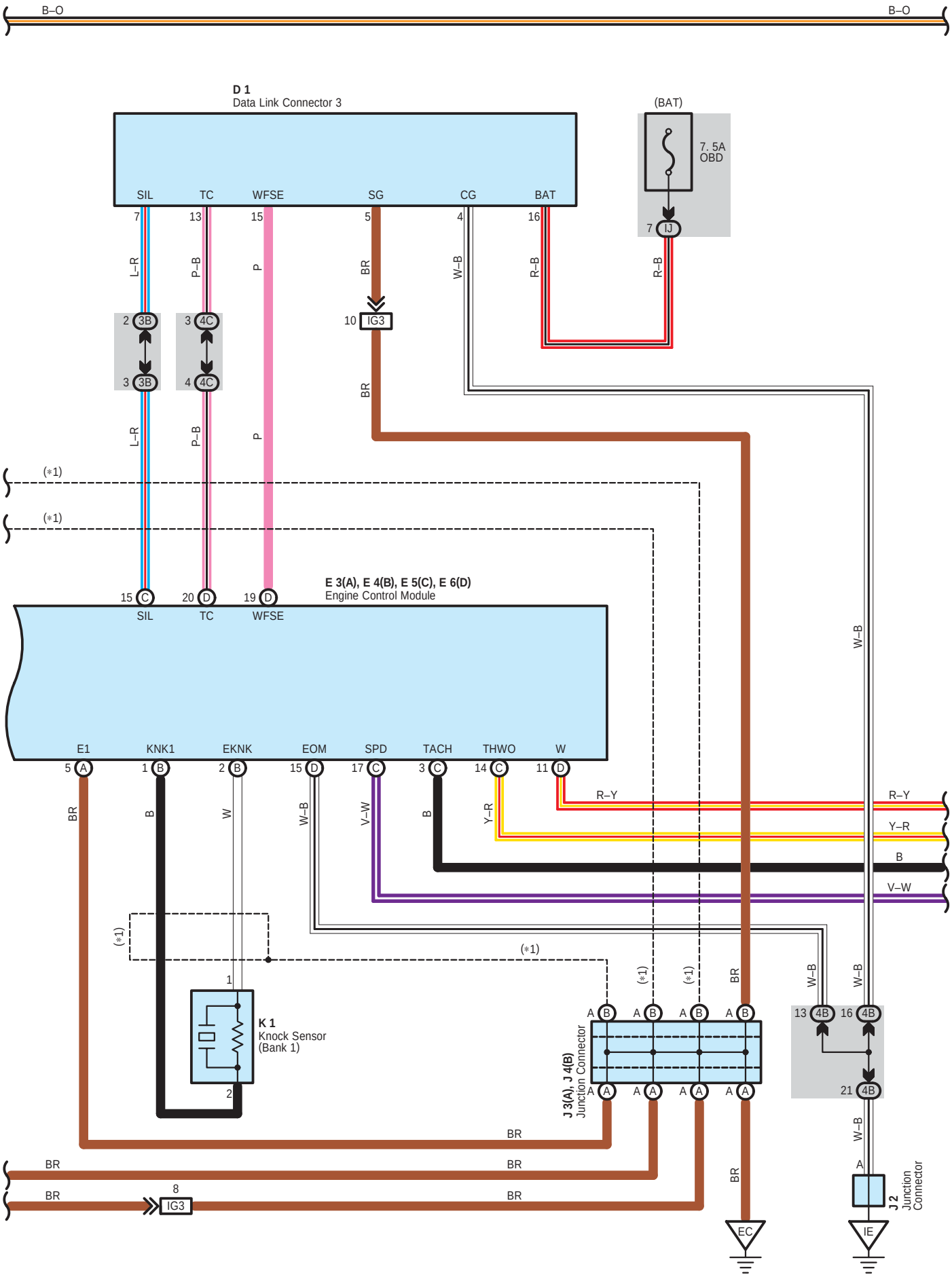
B–O
B–O
D 1
Data Link Connector 3
SIL
TC
WFSE
SG
CG
BAT
(BAT)
7. 5A
OBD
7 IJ
7
13
15
5
4
16
L–R
P–B
P
BR
W–B
R–B
R–B
2 3B
3 3B
3 4C
4 4C
10 IG3
BR
L–R
P–B
P
(*1)
(*1)
E 3(A), E 4(B), E 5(C), E 6(D)
Engine Control Module
15 C
20 D
19 D
SIL
TC
WFSE
W–B
E1
KNK1
EKNK
EOM
SPD
TACH
THWO
W
5 A
1 B
2 B
15 D
17 C
3 C
14 C
11 D
BR
B
W
W–B
V–W
B
Y–R
R–Y
R–Y
Y–R
B
V–W
(*1)
(*1)
1
2
K 1
Knock Sensor
(Bank 1)
(*1)
(*1)
BR
W–B
W–B
A B
A B
A B
A B
A A
A A
A A
A A
J 3(A), J 4(B)
Junction Connector
13 4B
16 4B
21 4B
BR
W–B
A
J 2
Junction
Connector
BR
BR
BR
BR
BR
8
IG3
EC
IE

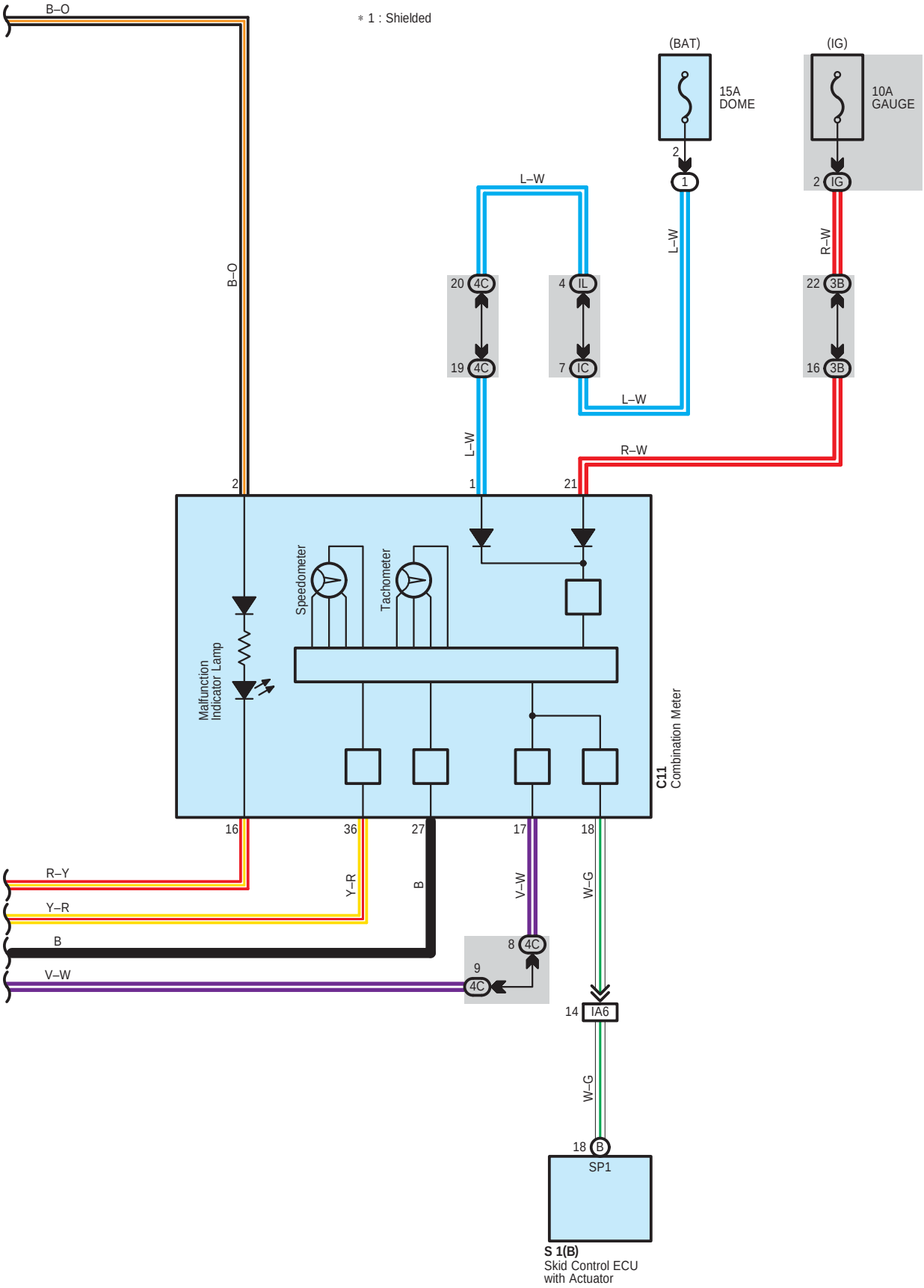
B–O
∗ 1 : Shielded
(BAT)
15A
DOME
(IG)
10A
GAUGE
2
1
2 IG
L–W
L–W
R–W
B–O
20 4C
4 IL
22 3B
19 4C
7 IC
16 3B
L–W
L–W
R–W
2
1
21
Speedometer
Tachometer
Malfunction
Indicator Lamp
C11
Combination Meter
16
36
27
17
18
R–Y
Y–R
B
V–W
Y–R
B
V–W
W–G
8 4C
9
4C
14 IA6
W–G
18 B
SP1
S 1(B)
Skid Control ECU
with Actuator

System Outline

The engine control system utilizes a microcomputer and maintains overall control of the engine, etc. An outline of engine control is given here.

1. Input Signals

(1) Engine coolant temp. signal system

The engine coolant temp. sensor detects the engine coolant temp. and has a built–in thermistor with a resistance which varies according to the engine coolant temp. Thus the engine coolant temp. is input as a control signal to TERMINAL THW of the engine control module.

(2) Intake air temp. signal system

The intake air temp. sensor is installed in the mass air flow meter and detects the intake air temp., which is input as a control signal to TERMINAL THA of the engine control module.

(3) Power steering oil pressure signal system

Power steering oil pressure is detected by the power steering oil pressure SW and is input as a control signal to TERMINAL PSW of the engine control module.

(4) RPM signal system

Camshaft position and crankshaft position are detected by the camshaft position sensor and crankshaft position sensor. Camshaft position is input as a control signal to TERMINAL G2 of the engine control module, and engine RPM is input into TERMINAL NE+.

(5) Throttle signal system

The throttle position sensor detects the throttle valve opening angle, which is input as a control signal to TERMINAL VTA of the engine control module.

(6) Vehicle speed signal system

The vehicle speed is detected by the ABS speed sensor and the signal is input to TERMINAL SPD of the engine control module via the comb. meter and the skid control ECU with actuator. (w/ ABS)

The vehicle speed is detected by the vehicle speed sensor installed in the transaxle and the signal is input to TERMINAL SPD of the engine control module via the comb. meter. (w/o ABS)

(7) A/C SW signal system

The operating voltage of the A/C SW is detected and is input as a control signal to TERMINAL A/CS of the engine control module.

(8) Battery signal system

Voltage is constantly applied to TERMINAL BATT of the engine control module. When the ignition SW is turned to on, voltage for engine control module operation is applied via the EFI relay to TERMINAL +B of the engine control module.

(9) Intake air volume signal system

Intake air volume is detected by the mass air flow meter, and is input as a control signal to TERMINAL VG of the engine control module.

(10) STA signal system

To confirm that the engine is cranking, the voltage applied to the starter motor during cranking is detected and is input as a control signal to TERMINAL STA of the engine control module.

(11) Oxygen sensor signal system

The oxygen density in the exhaust gases is detected and is input as a control signal into TERMINALS OX1A and OX1B of the engine control module. To maintain stable detection performance by the oxygen sensor, a heater is used for warming the sensor. The heater is also controlled by the engine control module (HT1A and HT1B).

(12) Engine knock signal system

Engine knocking is detected by the knock sensor (Bank 1) and input as a control signal to TERMINAL KNK1 of the engine control module.

(13) Electrical load signal system

When systems which cause a high electrical load such as the rear window defogger, taillight are turned on, a signal is input to TERMINALS ELS and ELS2 as a control signal.

2. Control System

∗ SFI system

The SFI system monitors the engine conditions through the signals, which are input from each sensor to the engine control module. Based on this data and the program memorized in the engine control module, the most appropriate fuel injection timing is decided and current is output to TERMINALS #10, #20, #30 and #40 of the engine control module, operating the injectors (to inject fuel). This is the system which finely controls the fuel injection in response to the driving conditions, through the engine control module.

∗ ESA system

The ESA system monitors the engine conditions using the signals, which are input to the engine control module from each sensor. Based on this data and the program memorized in the engine control module, the most appropriate ignition timing is decided and current is output to TERMINALS IGT1, IGT2, IGT3 and IGT4 of the engine control module. This output controls the ignition coil and igniter No. 1 , No. 2 , No. 3 and No. 4 to produce the most appropriate ignition timing for the driving conditions.

∗ IAC system

The IAC system increases the RPM and provides idle stability for fast idle–up when the engine is cold, and when the idle speed has dropped due to electrical load and so on. The engine control module evaluates the signals from each sensor, and outputs current to TERMINAL RSD to control the idle air control valve.

∗ Knock control system

Knock control system controls the gate based on the engine rotation speed and detects knocking by the peak value of the knock sensor (Bank 1) output during the gate open period, and then controls it to the most suitable ignition timing in proportion to the driving condition.

∗ Evapoparge control system

This system leads the vapor stuck to the canister to the serge tank in order not to agitate the air fuel by adjusting the fuel injection volume.

The signal at this time will be output from TERMINAL PRG of the engine control module to VSV (Purge).

3. Diagnosis System

With the diagnosis system, when there is a malfunctioning in the engine control module signal system,the malfunction system is recorded in the memory. The malfunctioning system can be found by reading the display (Code) of the malfunction indicator lamp.

4. Fail–Safe System

When a malfunction occurs in any system, if there is a possibility of engine trouble being caused by continued control based on the signals from that system, the fail–safe system either controls the system by using the data (Standard values) recorded in the engine control module memory or else stops the engine.

○ **: Parts Location**

Code		See Page	Code		See Page	Code		See Page
A13		38	E6	D	38	J5	B	39
A21		34 (2ZZ–GE)	F10		40	J6	A	39
A22		34 (2ZZ–GE)	H5	B	39	J7		39
A23		34 (2ZZ–GE)	H8	C	39	K1		35 (2ZZ–GE)
C1	B	34 (2ZZ–GE)	I1		35 (2ZZ–GE)	L4		41
C2	B	34 (2ZZ–GE)	I2	B	35 (2ZZ–GE)	M1		35 (2ZZ–GE)
C3		34 (2ZZ–GE)	I3	B	35 (2ZZ–GE)	O3		35 (2ZZ–GE)
C4	B	34 (2ZZ–GE)	I4	B	35 (2ZZ–GE)	P2		35 (2ZZ–GE)
C10		38	I5	B	35 (2ZZ–GE)	S1	B	35 (2ZZ–GE)
C11		38	I6	B	35 (2ZZ–GE)	S7	A	39
C12		38	I7		35 (2ZZ–GE)		B	39
C16		38	I8	B	35 (2ZZ–GE)	T1		35 (2ZZ–GE)
D1		38	I9		35 (2ZZ–GE)	T10		39
E2		34 (2ZZ–GE)	I11		39	V3		35 (2ZZ–GE)
E3	A	38	J2		39	V5	A	35 (2ZZ–GE)
E4	B	38	J3	A	39	V9		35 (2ZZ–GE)
E5	C	38	J4	B	39			

: **Relay Blocks**

Code	See Page	Relay Blocks (Relay Block Location)
1	23	Engine Room R/B (Engine Compartment Left)
3	28	RH R/B (Right Side of the Instrument Panel Reinforcement)

: **Junction Block and Wire Harness Connector**

Code	See Page	Junction Block and Wire Harness (Connector Location)
IC	25	Engine Room Main Wire and Instrument Panel J/B (Lower Finish Panel)
ID	25	Floor Wire and Instrument Panel J/B (Lower Finish Panel)
IG	25	Instrument Panel Wire and Instrument Panel J/B (Lower Finish Panel)
IH		
II		
IJ		
IK	24	
IL		
IM		
1A	23	Engine Wire and Engine Room J/B (Engine Compartment Left)
3B	29	Instrument Panel Wire and RH J/B (Right Side of the Instrument Panel Reinforcement)
3C		
4B	32	Instrument Panel Wire and Center J/B (Behind the Combination Meter)
4C		

: **Connector Joining Wire Harness and Wire Harness**

Code	See Page	Joining Wire Harness and Wire Harness (Connector Location)
EA1	42 (2ZZ–GE)	Engine Wire and Engine Room Main Wire (Inside of the Engine Room R/B)
IA2	44	Engine Room Main Wire and Instrument Panel Wire (Instrument Panel Reinforcement LH)
IA4		
IA5		
IA6		
ID2	44	Instrument Panel Wire and Floor Wire (Left Kick Panel)
IG1	45	Engine Wire and Instrument Panel Wire (Blower Unit RH)
IG2		
IG3		

: **Ground Points**

Code	See Page	Ground Points Location
EB	42 (2ZZ–GE)	Front Left Suspension Tower
EC	42 (2ZZ–GE)	Left Side of the Cylinder Head
ED		
EJ	42 (2ZZ–GE)	Left Fender
EK	42 (2ZZ–GE)	Front Left Suspension Tower
IE	44	Behind Combination Meter
IG	44	Right Kick Panel
BH	46	Left Quarter Panel
BI	46	Right Quarter Panel

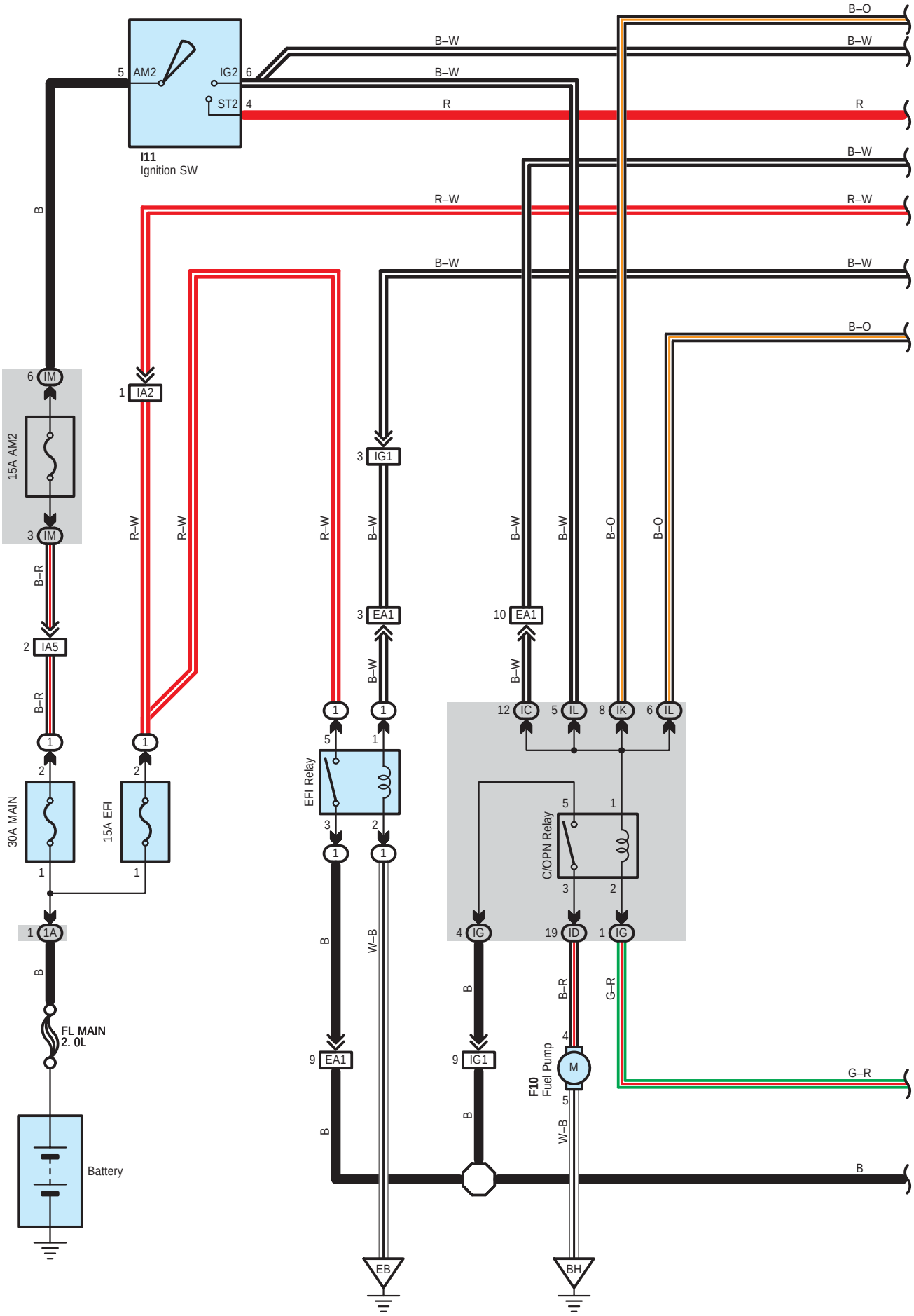
I11
Ignition SW
5 AM2
IG2 6
ST2 4
B–W
R
B–O
R–W
B
6 IM
3 IM
15A AM2
B–R
2 IA5
1 IA2
3 IG1
3 EA1
10 EA1
12 IC
5 IL
8 IK
6 IL
EFI Relay
C/OPN Relay
30A MAIN
15A EFI
1 1A
FL MAIN
2. 0L
Battery
9 EA1
9 IG1
4 IG
19 ID
1 IG
W–B
G–R
F10
Fuel Pump
M
EB
BH

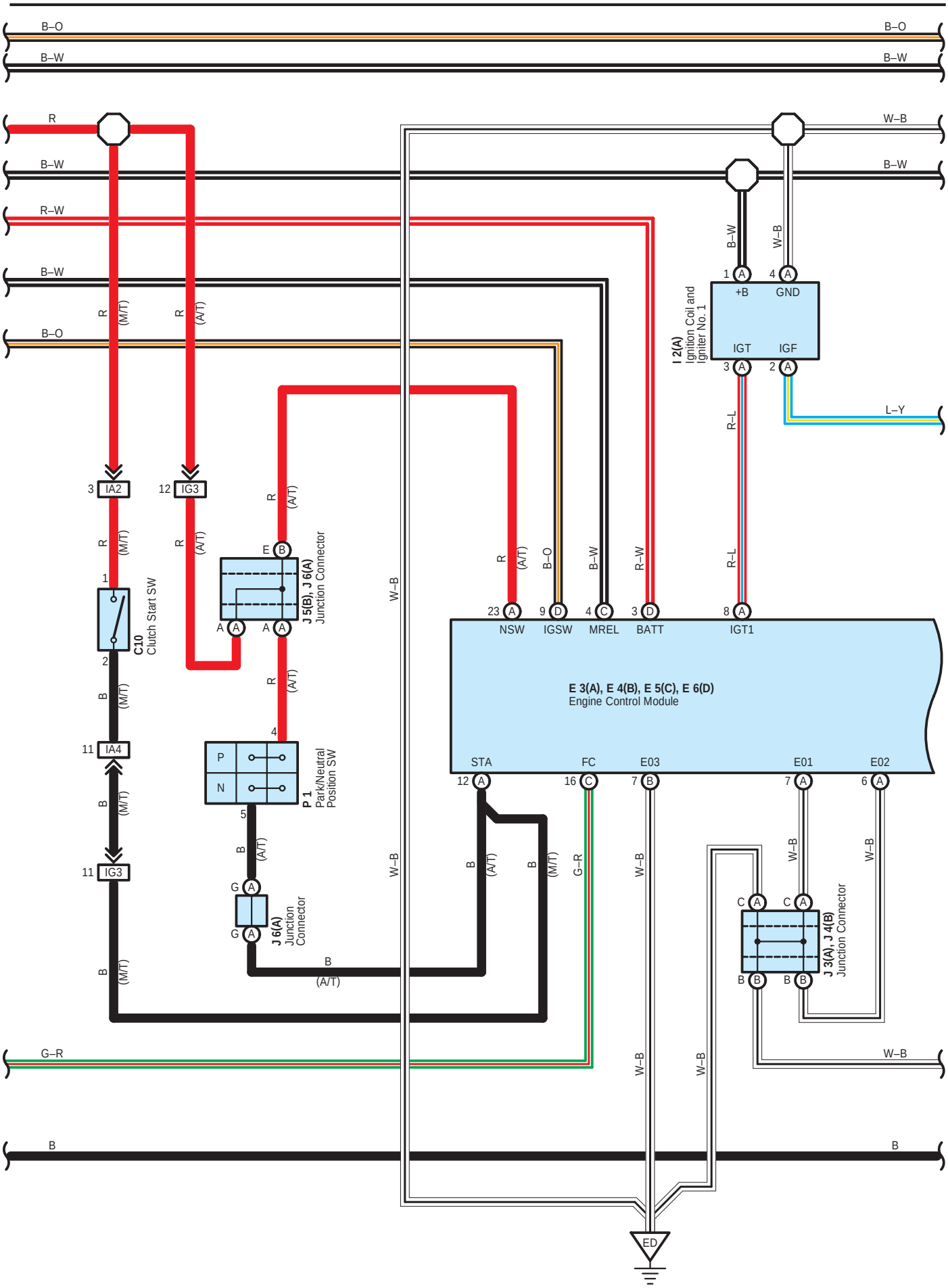
B–O
B–W
R
R–W
W–B
G–R
B
L–Y
R–L
IA2
IG3
IA4
C10
Clutch Start SW
J 5(B), J 6(A)
Junction Connector
P 1
Park/Neutral
Position SW
J 6(A)
Junction Connector
I 2(A)
Ignition Coil and
Igniter No. 1
+B
GND
IGT
IGF
NSW
IGSW
MREL
BATT
IGT1
E 3(A), E 4(B), E 5(C), E 6(D)
Engine Control Module
STA
FC
E03
E01
E02
J 3(A), J 4(B)
Junction Connector
ED

Engine Control for 1ZZ–FE (4WD)

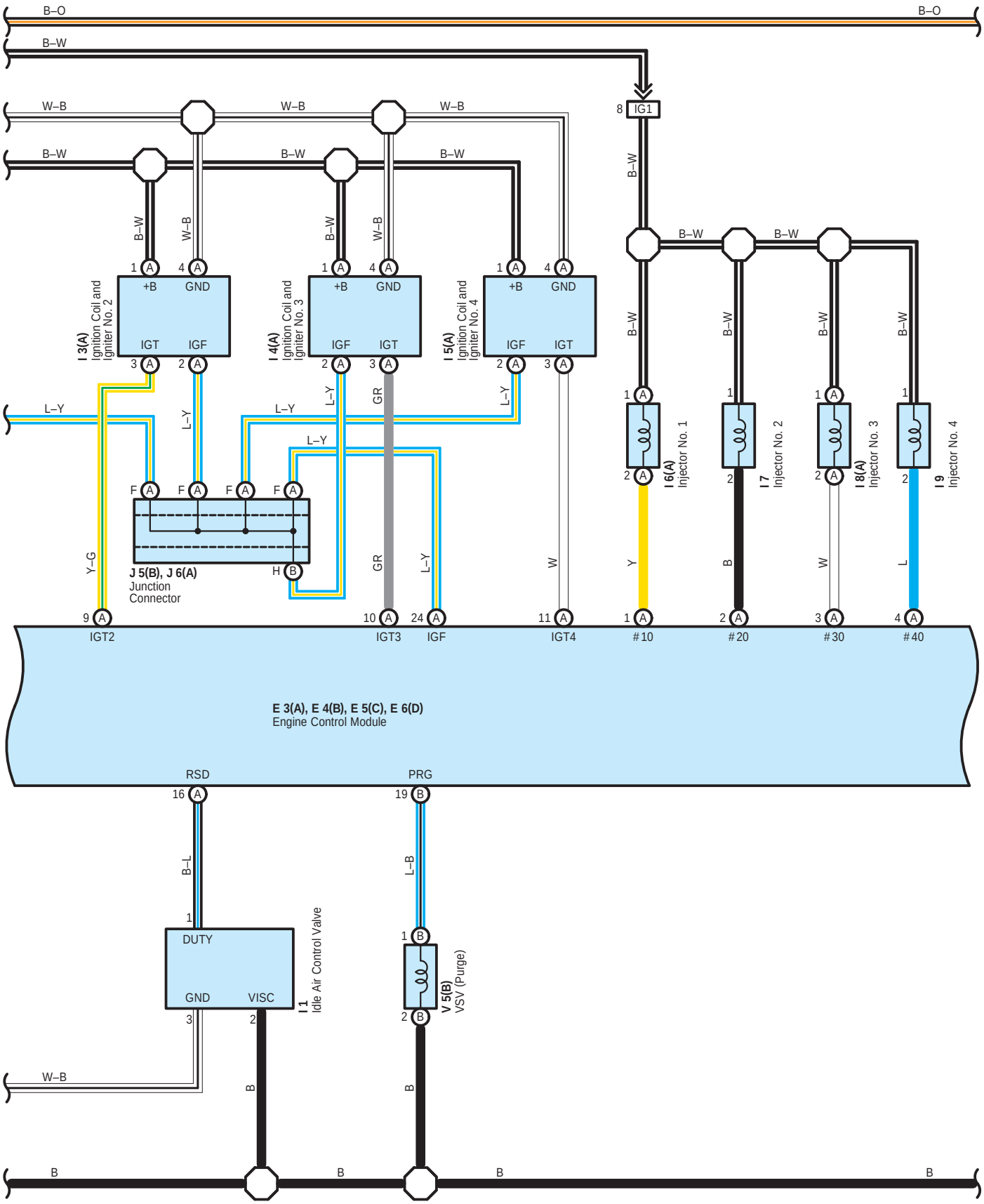

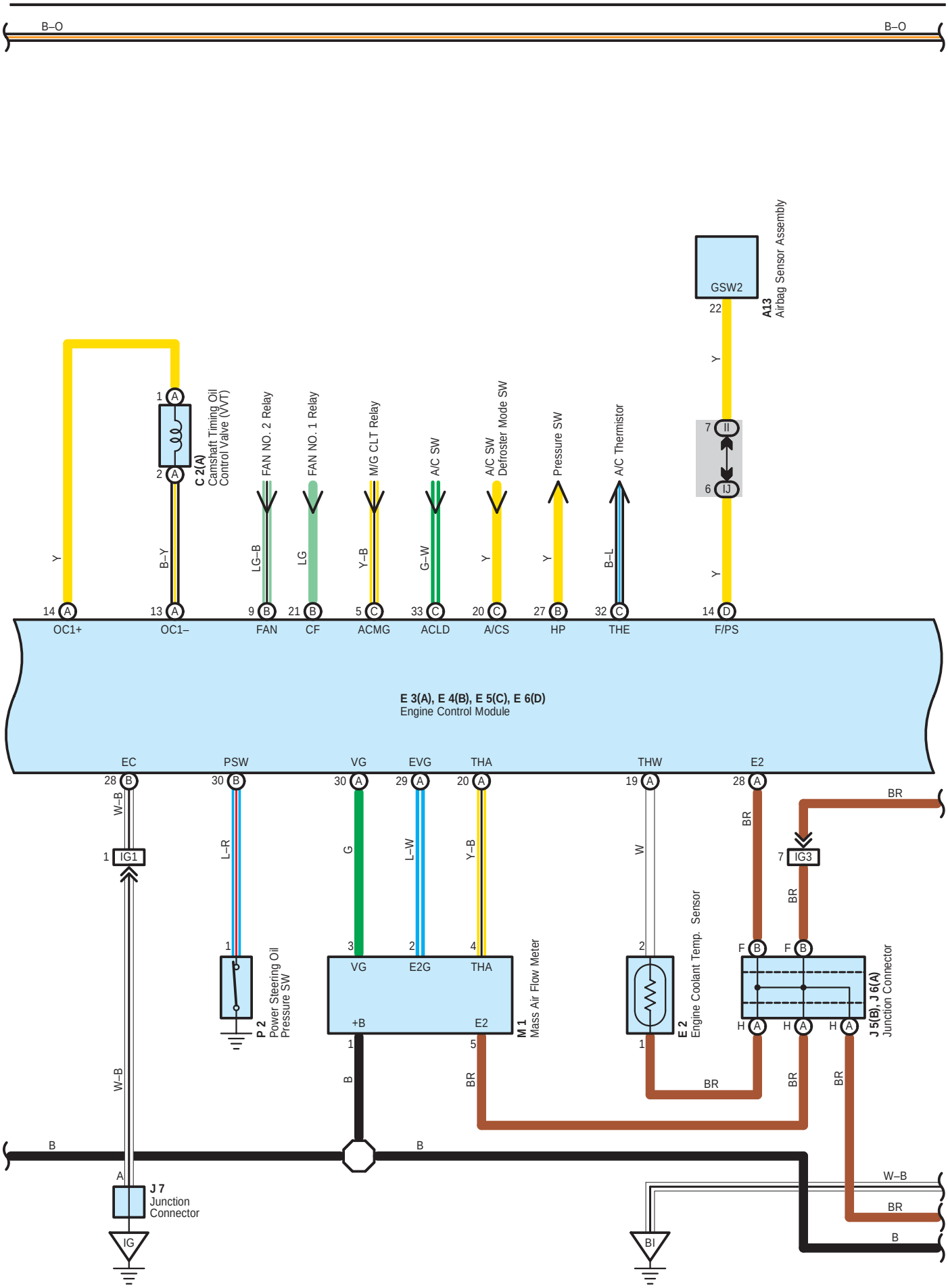
B–O
B–O
GSW2
A13
Airbag Sensor Assembly
22
Y
7 II
6 IJ
Y
C 2(A)
Camshaft Timing Oil
Control Valve (VVT)
FAN NO. 2 Relay
FAN NO. 1 Relay
M/G CLT Relay
A/C SW
A/C SW
Defroster Mode SW
Pressure SW
A/C Thermistor
Y
B–Y
LG–B
LG
Y–B
G–W
Y
Y
B–L
14 A OC1+
13 A OC1–
9 B FAN
21 B CF
5 C ACMG
33 C ACLD
20 C A/CS
27 B HP
32 C THE
14 D F/PS
E 3(A), E 4(B), E 5(C), E 6(D)
Engine Control Module
EC
PSW
VG
EVG
THA
THW
E2
28 B
30 B
30 A
29 A
20 A
19 A
28 A
W–B
L–R
G
L–W
Y–B
W
BR
1 IG1
7 IG3
BR
P 2
Power Steering Oil
Pressure SW
VG
E2G
THA
+B
E2
M 1
Mass Air Flow Meter
E 2
Engine Coolant Temp. Sensor
J 5(B), J 6(A)
Junction Connector
W–B
B
BR
BR
BR
BR
B
B
A
J 7
Junction
Connector
IG
BI
W–B
BR
B

Engine Control for 1ZZ–FE (4WD)

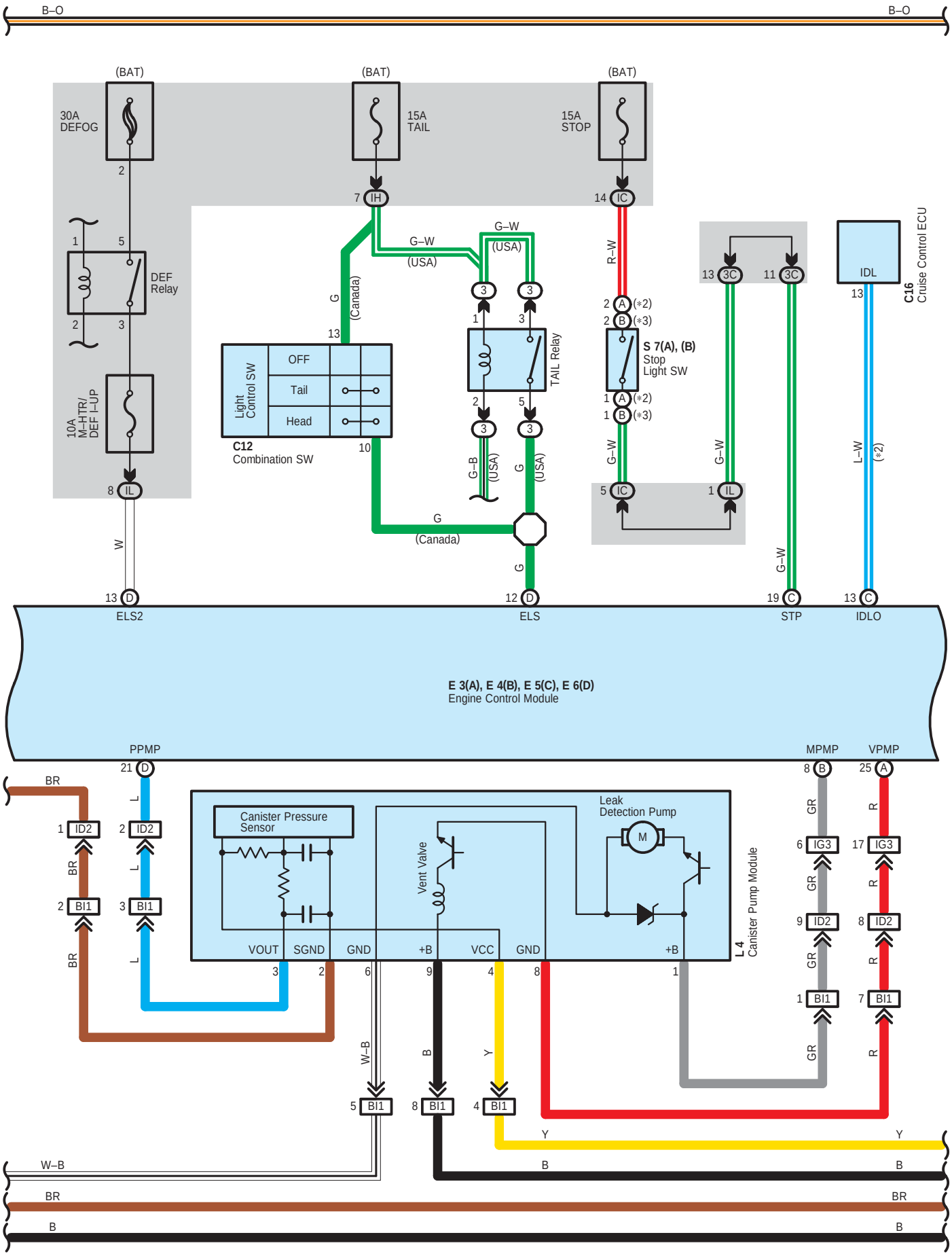

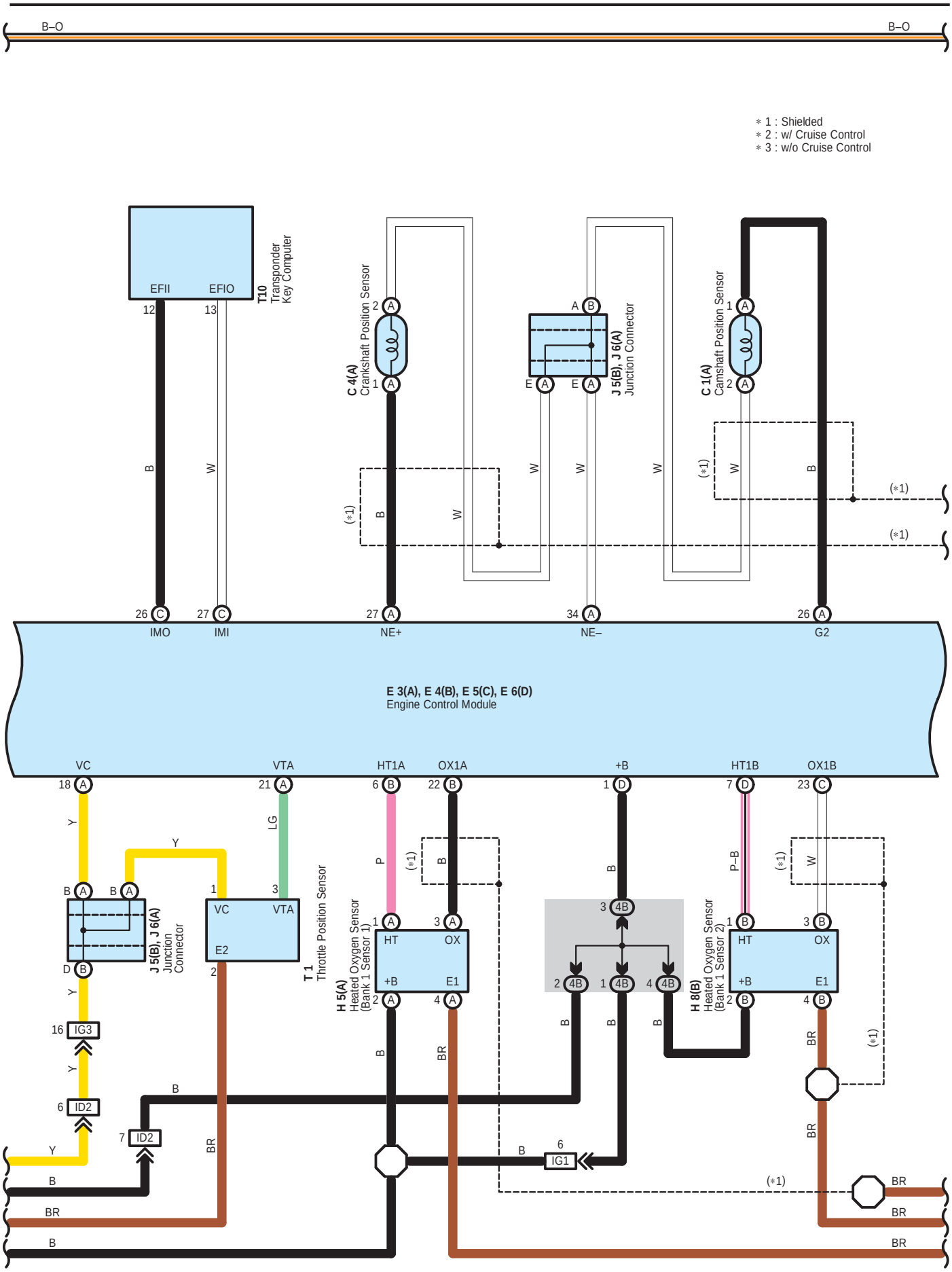
B–O
B–O
∗1 : Shielded
∗2 : w/ Cruise Control
∗3 : w/o Cruise Control
T10
Transponder Key Computer
EFII
EFIO
C 4(A)
Crankshaft Position Sensor
J 5(B), J 6(A)
Junction Connector
C 1(A)
Camshaft Position Sensor
IMO
IMI
NE+
NE–
G2
E 3(A), E 4(B), E 5(C), E 6(D)
Engine Control Module
VC
VTA
HT1A
OX1A
+B
HT1B
OX1B
J 5(B), J 6(A)
Junction Connector
T 1
Throttle Position Sensor
H 5(A)
Heated Oxygen Sensor (Bank 1 Sensor 1)
H 8(B)
Heated Oxygen Sensor (Bank 1 Sensor 2)
HT
OX
E1
IG3
ID2
IG1

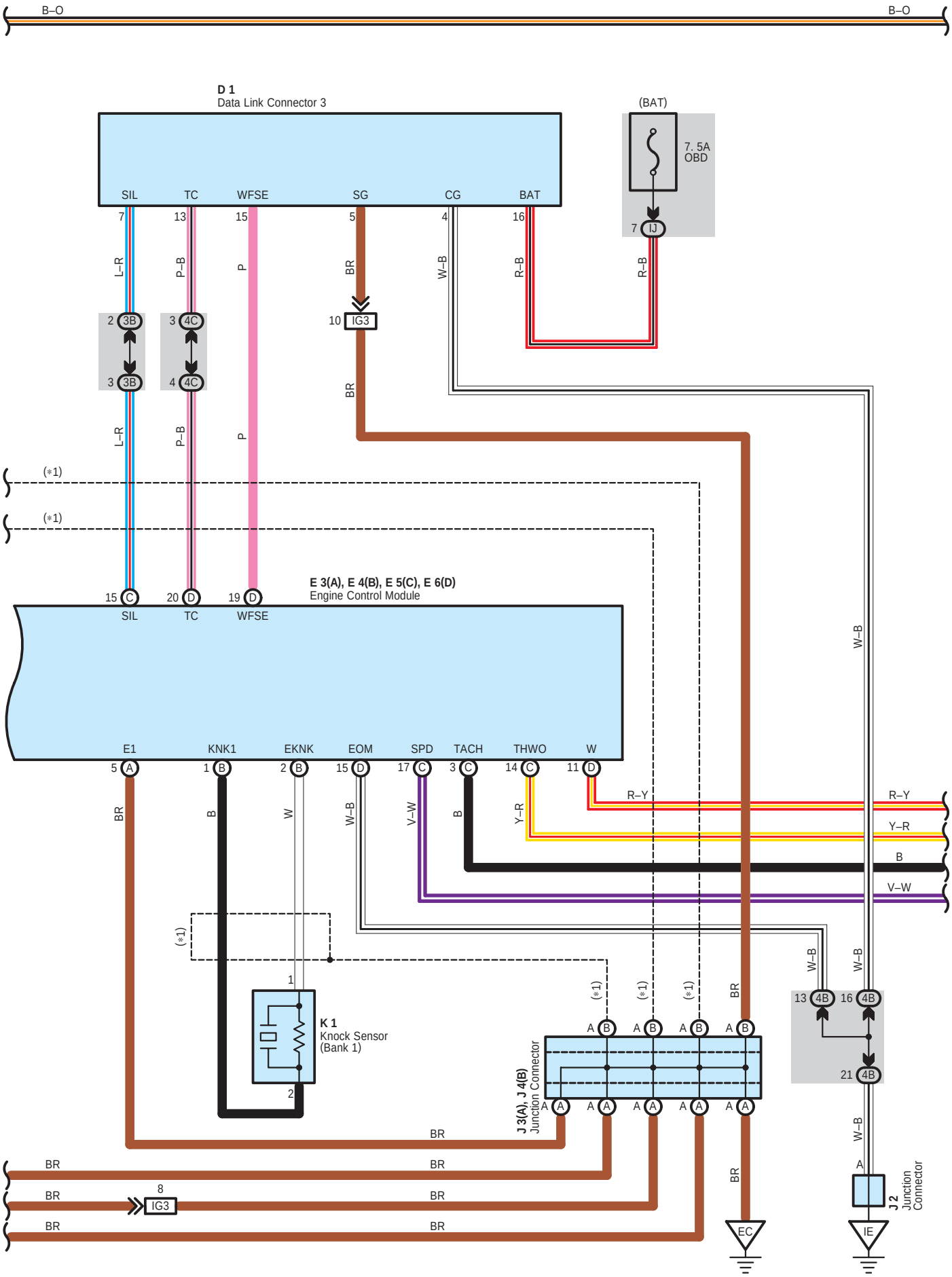
B–O
B–O
D 1
Data Link Connector 3
SIL
TC
WFSE
SG
CG
BAT
(BAT)
7. 5A
OBD
7 IJ
7
13
15
5
4
16
L–R
P–B
P
BR
W–B
R–B
R–B
2 3B
3 3B
3 4C
4 4C
10 IG3
BR
L–R
P–B
P
(*1)
(*1)
E 3(A), E 4(B), E 5(C), E 6(D)
Engine Control Module
15 C
20 D
19 D
SIL
TC
WFSE
W–B
E1
KNK1
EKNK
EOM
SPD
TACH
THWO
W
5 A
1 B
2 B
15 D
17 C
3 C
14 C
11 D
BR
B
W
W–B
V–W
B
Y–R
R–Y
R–Y
Y–R
B
V–W
(*1)
1
K 1
Knock Sensor
(Bank 1)
2
(*1)
(*1)
(*1)
BR
W–B
W–B
13 4B
16 4B
21 4B
A B
A B
A B
A B
J 3(A), J 4(B)
Junction Connector
A A
A A
A A
A A
A A
BR
W–B
A
J 2
Junction
Connector
BR
BR
BR
8
IG3
BR
BR
BR
BR
EC
IE

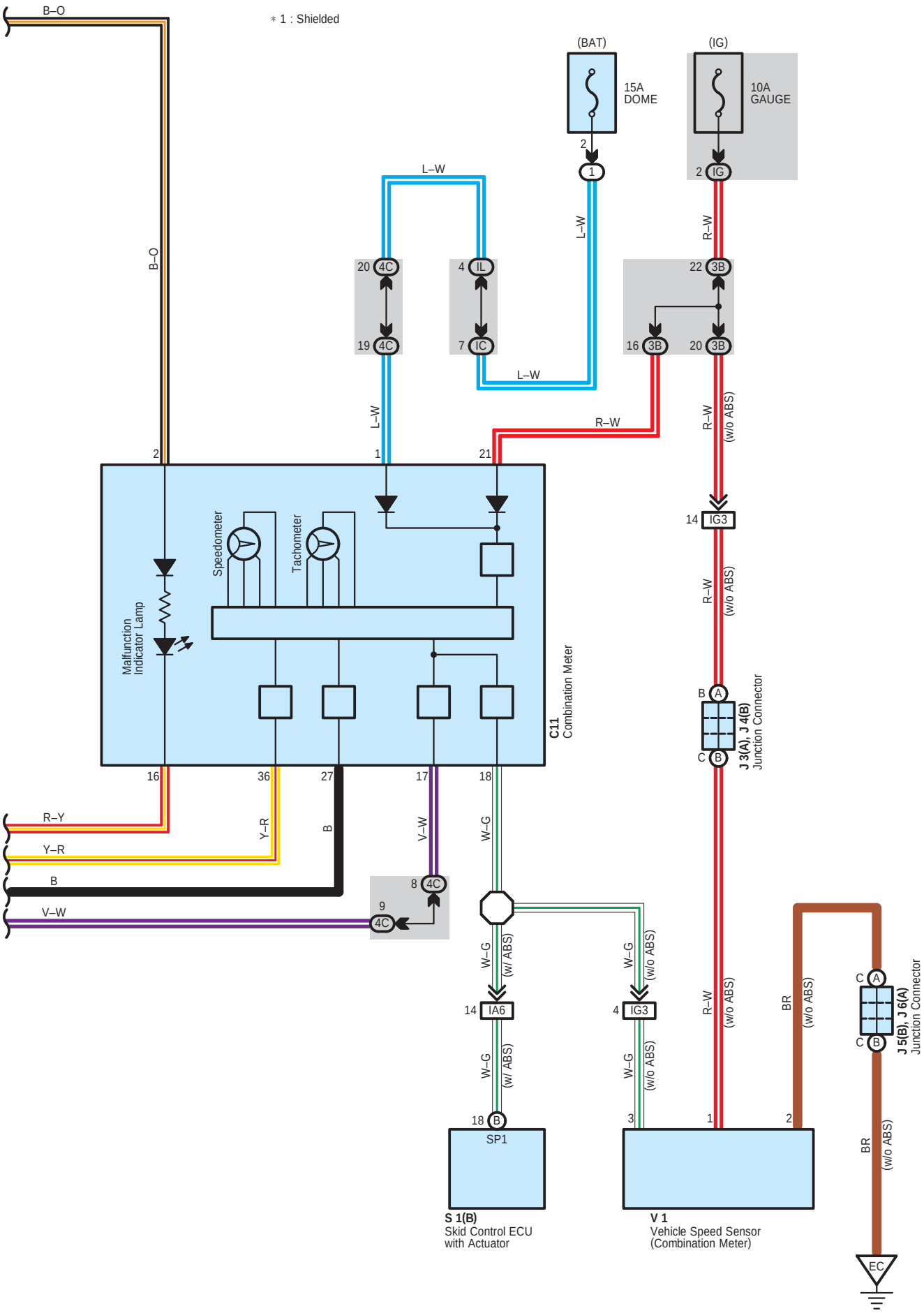
B–O
* 1 : Shielded
(BAT)
15A
DOME
(IG)
10A
GAUGE
L–W
R–W
20 4C
19 4C
4 IL
7 IC
22 3B
16 3B
20 3B
R–W
(w/o ABS)
14 IG3
Malfunction
Indicator Lamp
Speedometer
Tachometer
C11
Combination Meter
J 3(A), J 4(B)
Junction Connector
R–Y
Y–R
B
V–W
8 4C
9 4C
W–G
(w/ ABS)
(w/o ABS)
14 IA6
4 IG3
18 B
SP1
S 1(B)
Skid Control ECU
with Actuator
V 1
Vehicle Speed Sensor
(Combination Meter)
BR
J 5(B), J 6(A)
Junction Connector
EC

System Outline

The engine control system utilizes a microcomputer and maintains overall control of the engine, etc. An outline of engine control is given here.

1. Input Signals

(1) Engine coolant temp. signal system

The engine coolant temp. sensor detects the engine coolant temp. and has a built–in thermistor with a resistance which varies according to the engine coolant temp. Thus the engine coolant temp. is input as a control signal to TERMINAL THW of the engine control module.

(2) Intake air temp. signal system

The intake air temp. sensor is installed in the mass air flow meter and detects the intake air temp., which is input as a control signal to TERMINAL THA of the engine control module.

(3) Power steering oil pressure signal system

Power steering oil pressure is detected by the power steering oil pressure SW and is input as a control signal to TERMINAL PSW of the engine control module.

(4) RPM signal system

Camshaft position and crankshaft position are detected by the camshaft position sensor and crankshaft position sensor. Camshaft position is input as a control signal to TERMINAL G2 of the engine control module, and engine RPM is input into TERMINAL NE+.

(5) Throttle signal system

The throttle position sensor detects the throttle valve opening angle, which is input as a control signal to TERMINAL VTA of the engine control module.

(6) Vehicle speed signal system

The vehicle speed is detected by the ABS speed sensor and the signal is input to TERMINAL SPD of the engine control module via the comb. meter and the skid control ECU with actuator. (w/ ABS)

The vehicle speed is detected by the vehicle speed sensor installed in the transaxle and the signal is input to TERMINAL SPD of the engine control module via the comb. meter. (w/o ABS)

(7) NSW signal system (A/T)

The Park/Neutral position SW detects whether the shift position is in neutral or not, and inputs a control signal to TERMINAL NSW of the engine control module.

(8) A/C SW signal system

The operating voltage of the A/C SW is detected and is input as a control signal to TERMINAL A/CS of the engine control module.

(9) Battery signal system

Voltage is constantly applied to TERMINAL BATT of the engine control module. When the ignition SW is turned to on, voltage for engine control module operation is applied via the EFI relay to TERMINAL +B of the engine control module.

(10) Intake air volume signal system

Intake air volume is detected by the mass air flow meter, and is input as a control signal to TERMINAL VG of the engine control module.

(11) STA signal system

To confirm that the engine is cranking, the voltage applied to the starter motor during cranking is detected and is input as a control signal to TERMINAL STA of the engine control module.

(12) Oxygen sensor signal system

The oxygen density in the exhaust gases is detected and is input as a control signal into TERMINALS OX1A and OX1B of the engine control module. To maintain stable detection performance by the oxygen sensor, a heater is used for warming the sensor. The heater is also controlled by the engine control module (HT1A and HT1B).

(13) Engine knock signal system

Engine knocking is detected by the knock sensor (Bank 1) and input as a control signal to TERMINAL KNK1 of the engine control module.

(14) Electrical load signal system

When systems which cause a high electrical load such as the rear window defogger, taillight are turned on, a signal is input to TERMINALS ELS and ELS2 as a control signal.

2. Control System

∗ SFI system

The SFI system monitors the engine conditions through the signals, which are input from each sensor to the engine control module. Based on this data and the program memorized in the engine control module, the most appropriate fuel injection timing is decided and current is output to TERMINALS #10, #20, #30 and #40 of the engine control module, operating the injectors (to inject fuel). This is the system which finely controls the fuel injection in response to the driving conditions, through the engine control module.

∗ ESA system

The ESA system monitors the engine conditions using the signals, which are input to the engine control module from each sensor. Based on this data and the program memorized in the engine control module, the most appropriate ignition timing is decided and current is output to TERMINALS IGT1, IGT2, IGT3 and IGT4 of the engine control module. This output controls the ignition coil and igniter No. 1 , No. 2 , No. 3 and No. 4 to produce the most appropriate ignition timing for the driving conditions.

∗ IAC system

The IAC system increases the RPM and provides idle stability for fast idle–up when the engine is cold, and when the idle speed has dropped due to electrical load and so on. The engine control module evaluates the signals from each sensor, and outputs current to TERMINAL RSD to control the idle air control valve.

∗ Knock control system

Knock control system controls the gate based on the engine rotation speed and detects knocking by the peak value of the knock sensor (Bank 1) output during the gate open period, and then controls it to the most suitable ignition timing in proportion to the driving condition.

∗ Evapoparge control system

This system leads the vapor stuck to the canister to the serge tank in order not to agitate the air fuel by adjusting the fuel injection volume.

The signal at this time will be output from TERMINAL PRG of the engine control module to VSV (Purge).

3. Diagnosis System

With the diagnosis system, when there is a malfunctioning in the engine control module signal system,the malfunction system is recorded in the memory. The malfunctioning system can be found by reading the display (Code) of the malfunction indicator lamp.

4. Fail–Safe System

When a malfunction occurs in any system, if there is a possibility of engine trouble being caused by continued control based on the signals from that system, the fail–safe system either controls the system by using the data (Standard values) recorded in the engine control module memory or else stops the engine.

○ : Parts Location

Code		See Page	Code		See Page	Code		See Page
A13		38	H5	A	39	J6	A	39
C1	A	36 (1ZZ–FE)	H8	B	39	J7		39
C2	A	36 (1ZZ–FE)	I1		37 (1ZZ–FE)	K1		37 (1ZZ–FE)
C4	A	36 (1ZZ–FE)	I2	A	37 (1ZZ–FE)	L4		41
C10		38	I3	A	37 (1ZZ–FE)	M1		37 (1ZZ–FE)
C11		38	I4	A	37 (1ZZ–FE)	P1		37 (1ZZ–FE)
C12		38	I5	A	37 (1ZZ–FE)	P2		37 (1ZZ–FE)
C16		38	I6	A	37 (1ZZ–FE)	S1	B	37 (1ZZ–FE)
D1		38	I7		37 (1ZZ–FE)	S7	A	39
E2		36 (1ZZ–FE)	I8	A	37 (1ZZ–FE)		B	39
E3	A	38	I9		37 (1ZZ–FE)	T1		37 (1ZZ–FE)
E4	B	38	I11		39	T10		39
E5	C	38	J2		39	V1		37 (1ZZ–FE)
E6	D	38	J3	A	39	V5	B	37 (1ZZ–FE)
F10		40	J4	B	39			
H5	A	36 (1ZZ–FE)	J5	B	39			

▭ : Relay Blocks

Code	See Page	Relay Blocks (Relay Block Location)
1	23	Engine Room R/B (Engine Compartment Left)
3	28	RH R/B (Right Side of the Instrument Panel Reinforcement)

: **Junction Block and Wire Harness Connector**

Code	See Page	Junction Block and Wire Harness (Connector Location)
IC	25	Engine Room Main Wire and Instrument Panel J/B (Lower Finish Panel)
ID	25	Floor Wire and Instrument Panel J/B (Lower Finish Panel)
IG	25	Instrument Panel Wire and Instrument Panel J/B (Lower Finish Panel)
IH		
II		
IJ		
IK	24	
IL		
IM		
1A	23	Engine Wire and Engine Room J/B (Engine Compartment Left)
3B	29	Instrument Panel Wire and RH J/B (Right Side of the Instrument Panel Reinforcement)
3C		
4B	32	Instrument Panel Wire and Center J/B (Behind the Combination Meter)
4C		

: **Connector Joining Wire Harness and Wire Harness**

Code	See Page	Joining Wire Harness and Wire Harness (Connector Location)
EA1	43 (1ZZ–FE)	Engine Wire and Engine Room Main Wire (Inside of the Engine Room R/B)
IA2	44	Engine Room Main Wire and Instrument Panel Wire (Instrument Panel Reinforcement LH)
IA4		
IA5		
IA6		
ID2	44	Instrument Panel Wire and Floor Wire (Left Kick Panel)
IG1	45	Engine Wire and Instrument Panel Wire (Blower Unit RH)
IG3		
BI1	46	Floor Wire and Floor No.3 Wire (Near the Fuel Tank)

: **Ground Points**

Code	See Page	Ground Points Location
EB	43 (1ZZ–FE)	Front Left Suspension Tower
EC	43 (1ZZ–FE)	Left Side of the Cylinder Head
ED		
IE	44	Behind Combination Meter
IG	44	Right Kick Panel
BH	46	Left Quarter Panel
BI	46	Right Quarter Panel

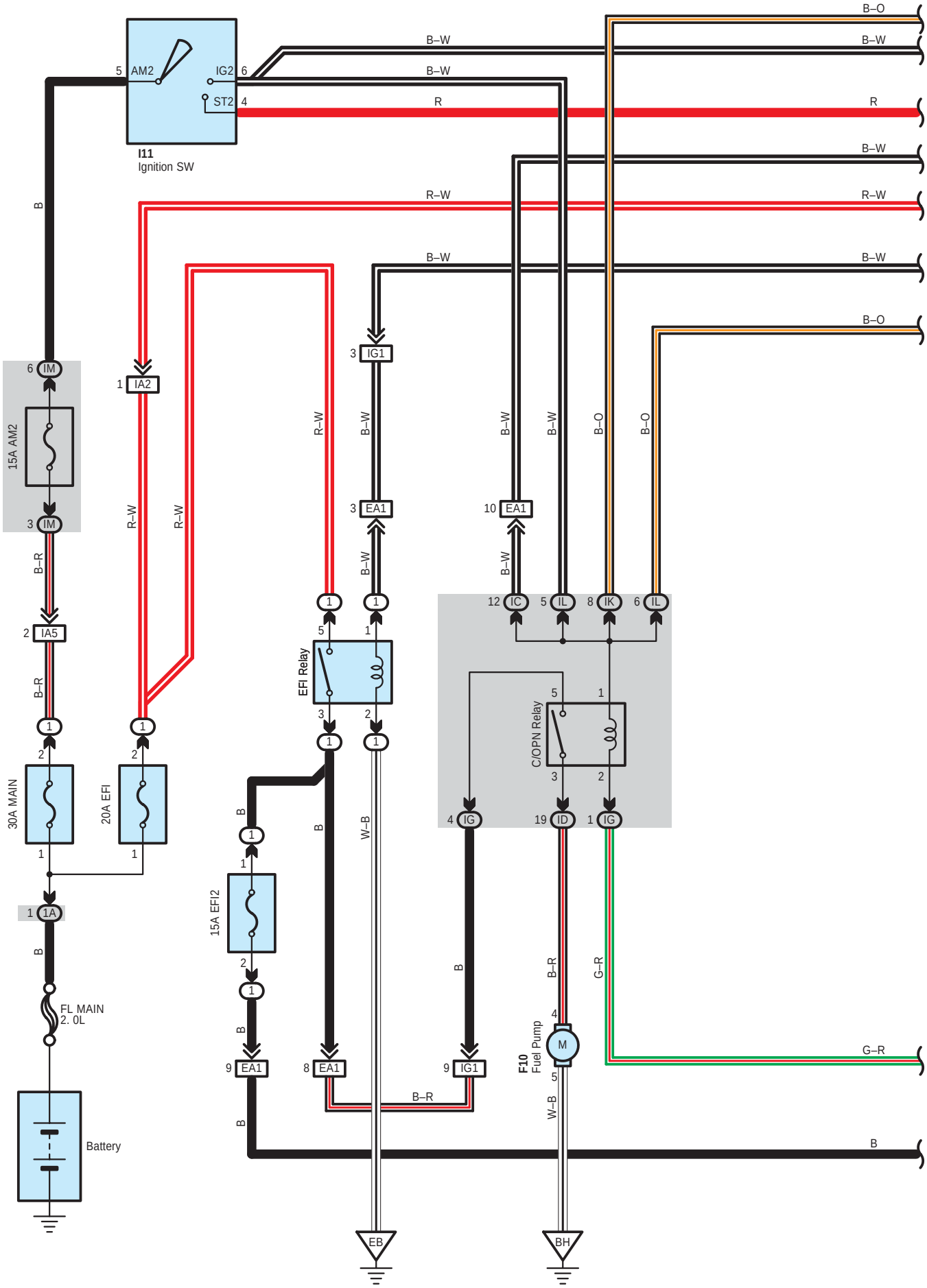
I11
Ignition SW
AM2
IG2
ST2
B–W
R
R–W
B–O
B
B–R
G–R
W–B
15A AM2
IM
IA2
IA5
IG1
EA1
IC
IL
IK
IG
ID
EFI Relay
C/OPN Relay
30A MAIN
20A EFI
15A EFI2
1A
FL MAIN
2. 0L
Battery
F10
Fuel Pump
M
EB
BH

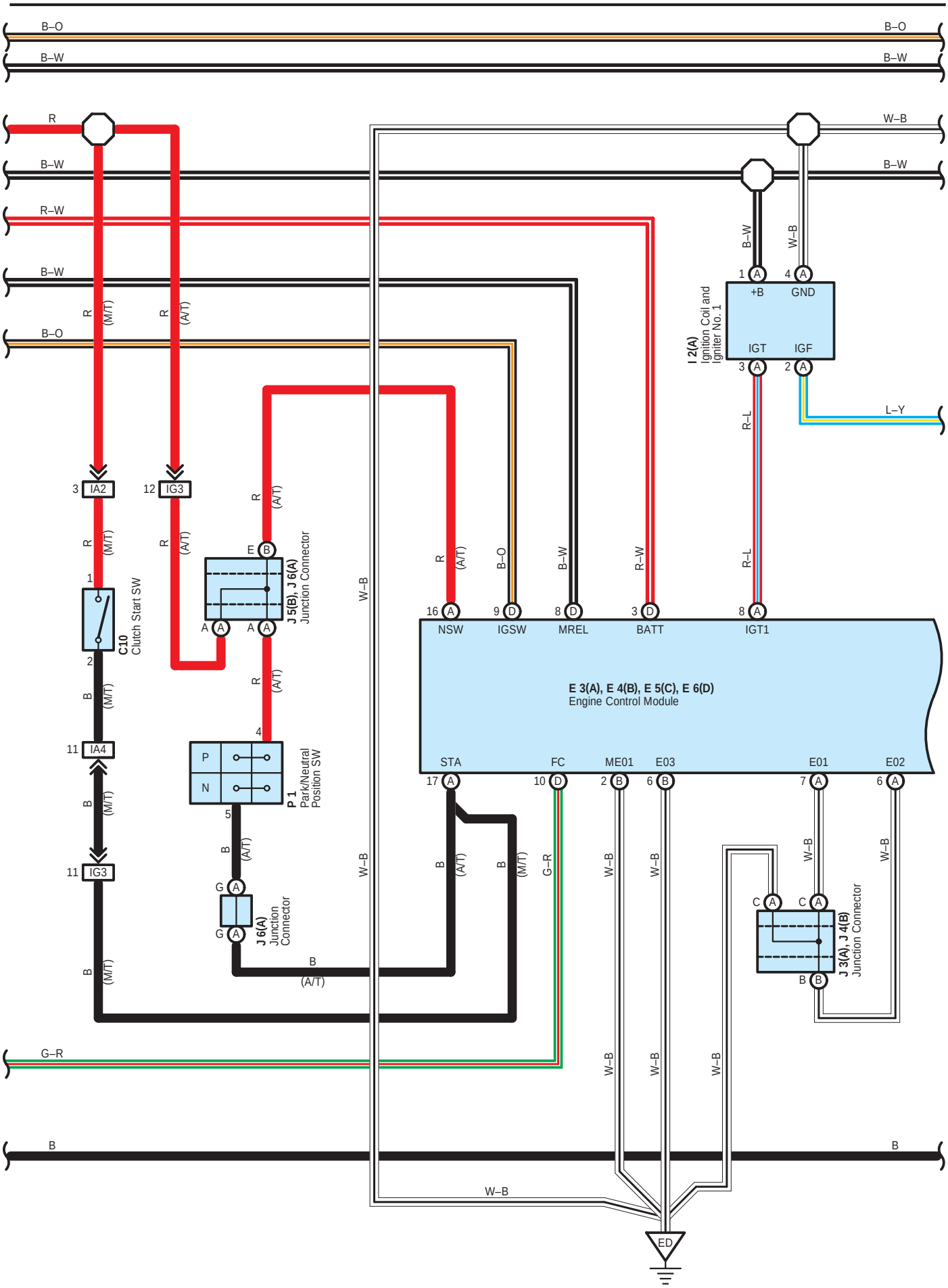
B–O
B–W
R
R–W
W–B
IA2
IG3
IA4
C10
Clutch Start SW
J 5(B), J 6(A)
Junction Connector
P 1
Park/Neutral
Position SW
J 6(A)
Junction Connector
I 2(A)
Ignition Coil and
Igniter No. 1
+B
GND
IGT
IGF
L–Y
R–L
NSW
IGSW
MREL
BATT
IGT1
E 3(A), E 4(B), E 5(C), E 6(D)
Engine Control Module
STA
FC
ME01
E03
E01
E02
J 3(A), J 4(B)
Junction Connector
G–R
ED

Engine Control for 1ZZ–FE (2WD)

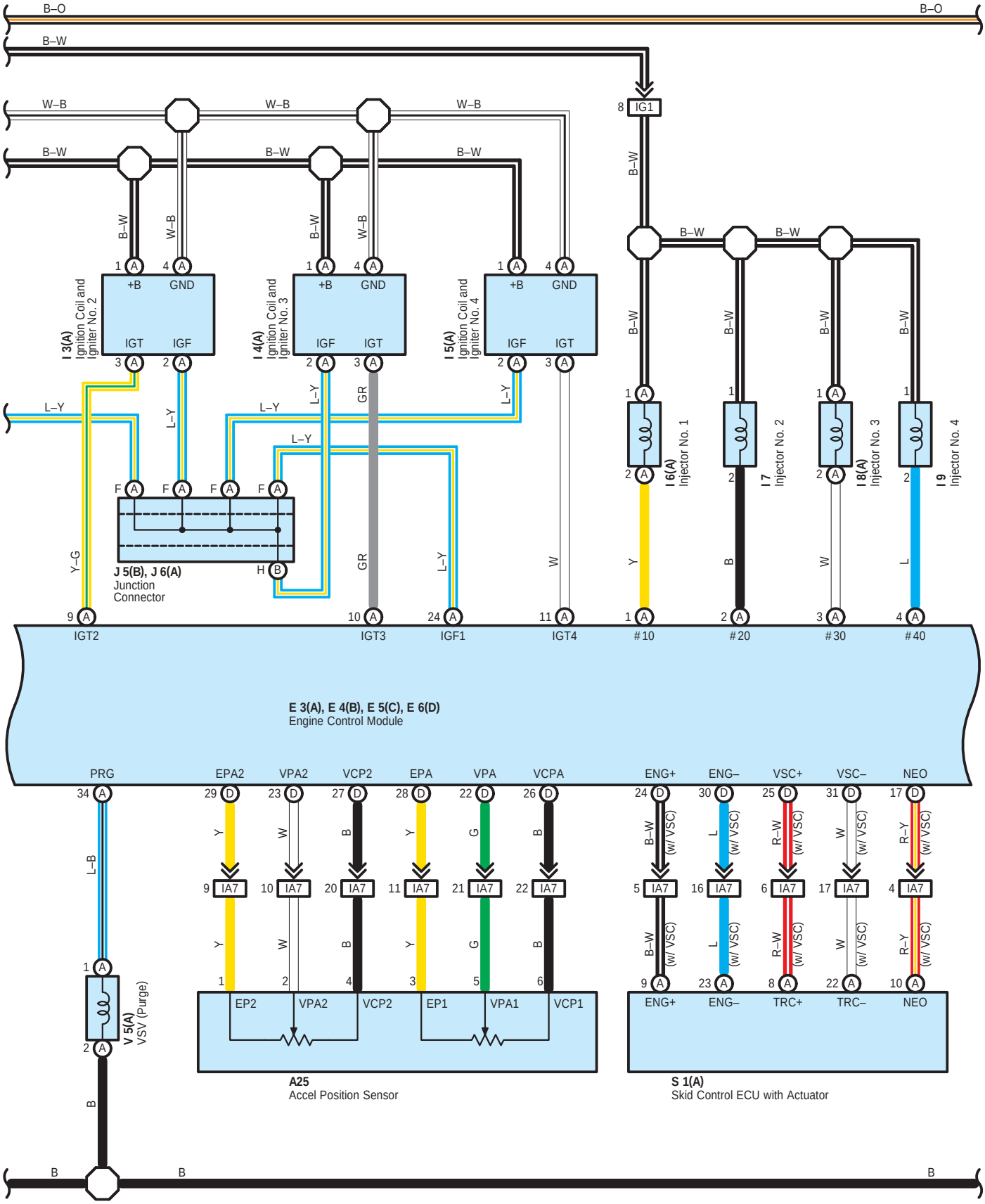

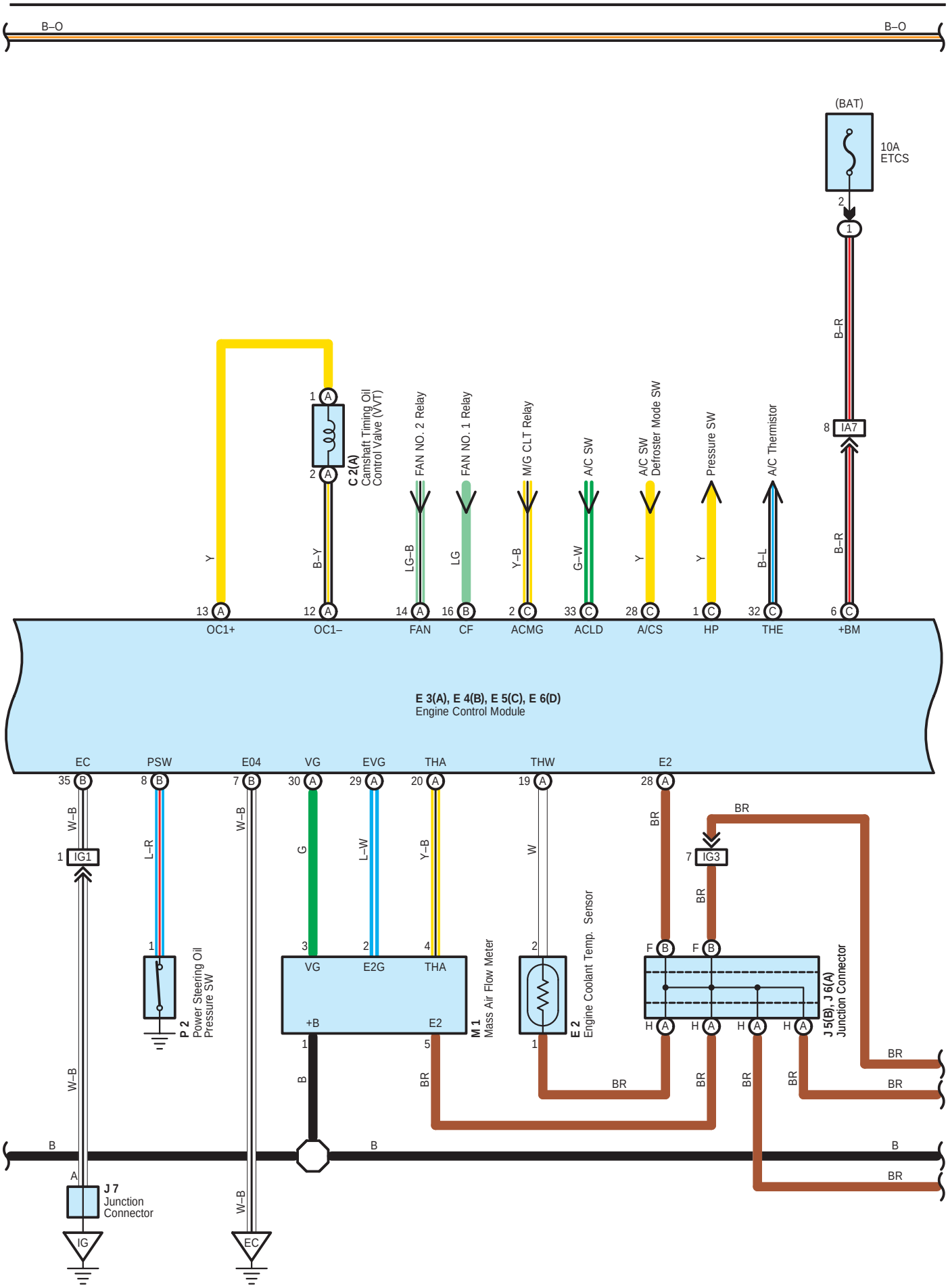
B–O
B–O
(BAT)
10A
ETCS
2
1
B–R
8
IA7
B–R
C 2(A)
Camshaft Timing Oil
Control Valve (VVT)
FAN NO. 2 Relay
FAN NO. 1 Relay
M/G CLT Relay
A/C SW
A/C SW
Defroster Mode SW
Pressure SW
A/C Thermistor
Y
B–Y
LG–B
LG
Y–B
G–W
Y
Y
B–L
13 A OC1+
12 A OC1–
14 A FAN
16 B CF
2 C ACMG
33 C ACLD
28 C A/CS
1 C HP
32 C THE
6 C +BM
E 3(A), E 4(B), E 5(C), E 6(D)
Engine Control Module
EC
PSW
E04
VG
EVG
THA
THW
E2
35 B
8 B
7 B
30 A
29 A
20 A
19 A
28 A
W–B
1 IG1
L–R
W–B
G
L–W
Y–B
W
BR
BR
7 IG3
BR
1
P 2
Power Steering Oil
Pressure SW
3
2
4
VG
E2G
THA
+B
E2
M 1
Mass Air Flow Meter
2
E 2
Engine Coolant Temp. Sensor
F B
F B
H A
H A
H A
H A
J 5(B), J 6(A)
Junction Connector
1
5
1
B
BR
BR
BR
BR
BR
BR
BR
BR
B
B
B
BR
A
J 7
Junction
Connector
IG
W–B
EC

Engine Control for 1ZZ–FE (2WD)

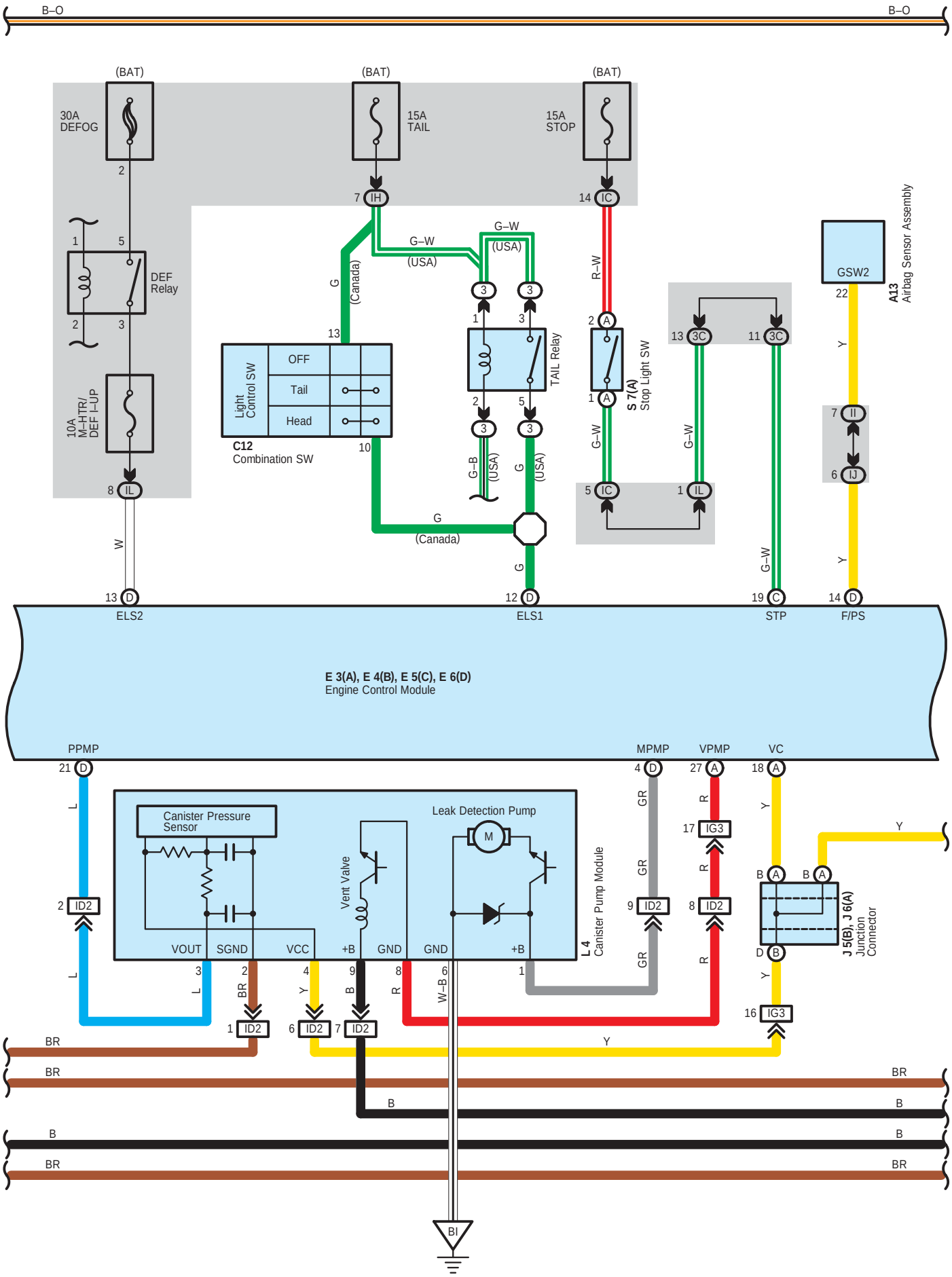

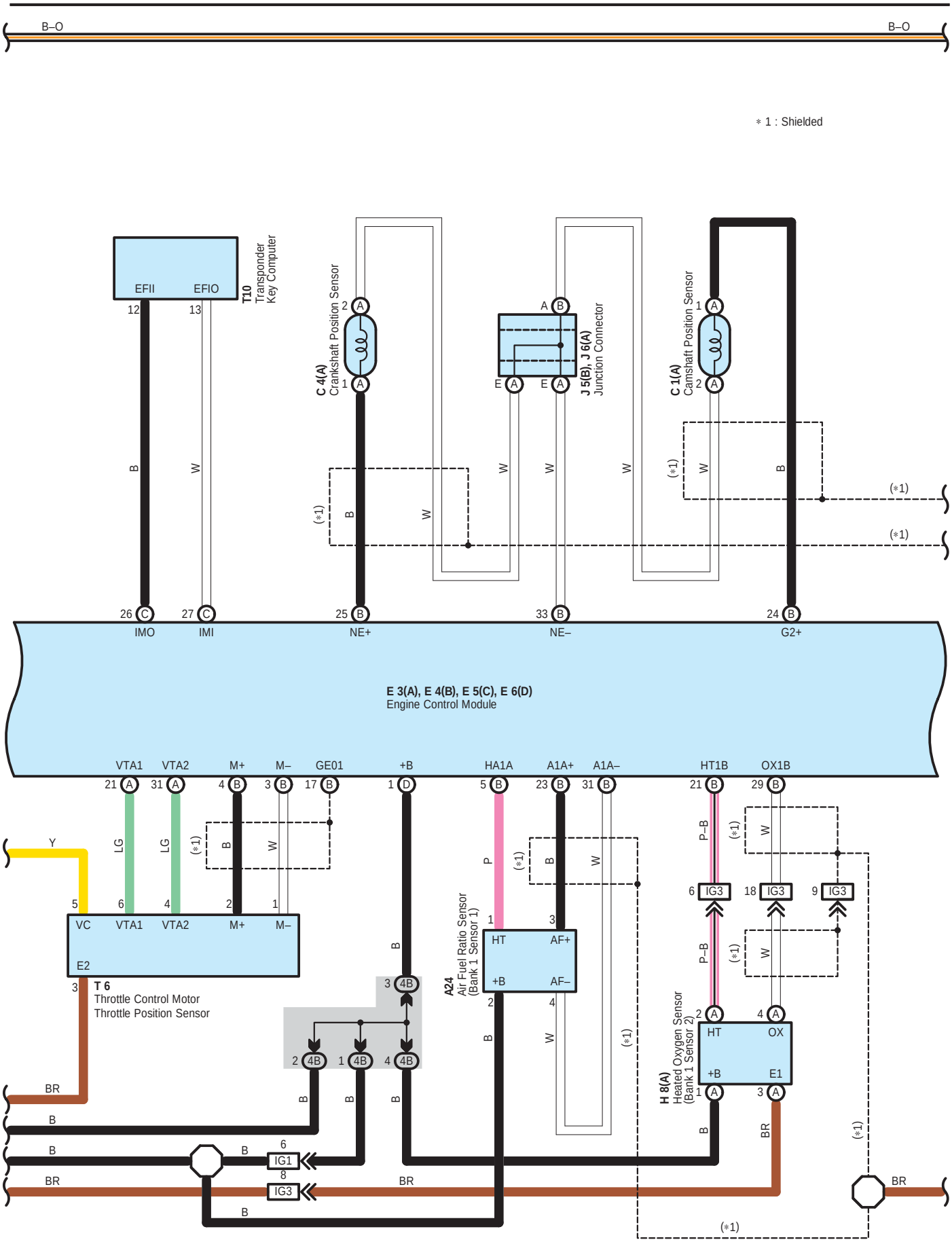
B–O
B–O
∗1 : Shielded
EFII
EFIO
T10
Transponder Key Computer
C 4(A)
Crankshaft Position Sensor
J 5(B), J 6(A)
Junction Connector
C 1(A)
Camshaft Position Sensor
IMO
IMI
NE+
NE–
G2+
E 3(A), E 4(B), E 5(C), E 6(D)
Engine Control Module
VTA1
VTA2
M+
M–
GE01
+B
HA1A
A1A+
A1A–
HT1B
OX1B
VC
E2
T 6
Throttle Control Motor
Throttle Position Sensor
A24
Air Fuel Ratio Sensor (Bank 1 Sensor 1)
HT
AF+
AF–
H 8(A)
Heated Oxygen Sensor (Bank 1 Sensor 2)
OX
E1
IG1
IG3

Engine Control for 1ZZ–FE (2WD)

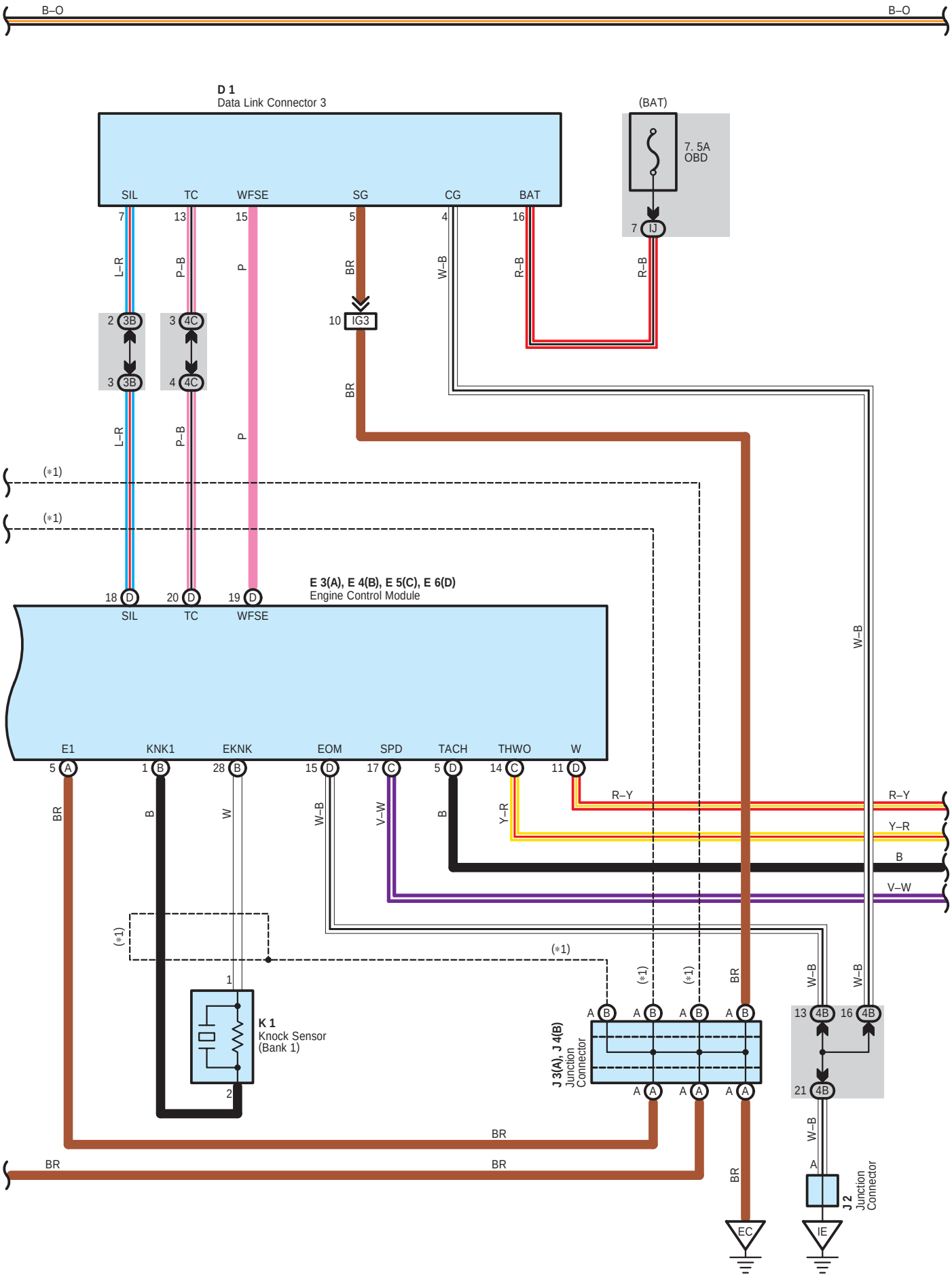

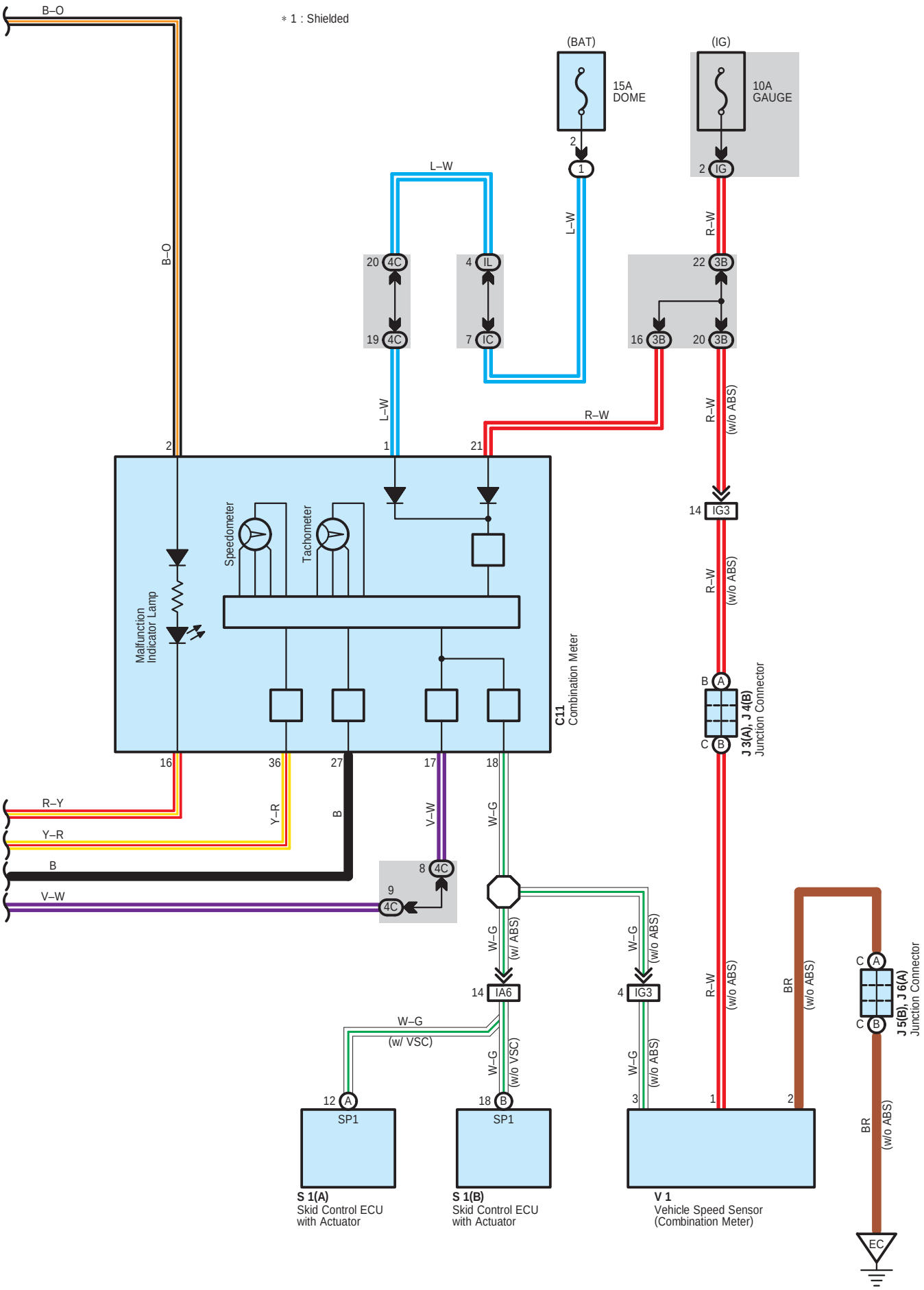
* 1 : Shielded
(BAT)
15A
DOME
(IG)
10A
GAUGE
B–O
L–W
R–W
Speedometer
Tachometer
Malfunction
Indicator Lamp
C11
Combination Meter
IG3
(w/o ABS)
J 3(A), J 4(B)
Junction Connector
R–Y
Y–R
B
V–W
W–G
(w/ ABS)
IA6
(w/ VSC)
(w/o VSC)
BR
J 5(B), J 6(A)
Junction Connector
SP1
S 1(A)
Skid Control ECU
with Actuator
S 1(B)
Skid Control ECU
with Actuator
V 1
Vehicle Speed Sensor
(Combination Meter)
EC

System Outline

The engine control system utilizes a microcomputer and maintains overall control of the engine, etc. An outline of engine control is given here.

1. Input Signals

(1) Engine coolant temp. signal system

The engine coolant temp. sensor detects the engine coolant temp. and has a built–in thermistor with a resistance which varies according to the engine coolant temp. Thus the engine coolant temp. is input as a control signal to TERMINAL THW of the engine control module.

(2) Intake air temp. signal system

The intake air temp. sensor is installed in the mass air flow meter and detects the intake air temp., which is input as a control signal to TERMINAL THA of the engine control module.

(3) Power steering oil pressure signal system

Power steering oil pressure is detected by the power steering oil pressure SW and is input as a control signal to TERMINAL PSW of the engine control module.

(4) RPM signal system

Camshaft position and crankshaft position are detected by the camshaft position sensor and crankshaft position sensor. Camshaft position is input as a control signal to TERMINAL G2+ of the engine control module, and engine RPM is input into TERMINAL NE+.

(5) Throttle signal system

The throttle position sensor detects the throttle valve opening angle, which is input as a control signal to TERMINALS VTA1 and VTA2 of the engine control module.

(6) Vehicle speed signal system

The vehicle speed is detected by the ABS speed sensor and the signal is input to TERMINAL SPD of the engine control module via the comb. meter and the skid control ECU with actuator. (w/ ABS)

The vehicle speed is detected by the vehicle speed sensor installed in the transaxle and the signal is input to TERMINAL SPD of the engine control module via the comb. meter. (w/o ABS)

(7) NSW signal system (A/T)

The Park/Neutral position SW detects whether the shift position is in neutral or not, and inputs a control signal to TERMINAL NSW of the engine control module.

(8) A/C SW signal system

The operating voltage of the A/C SW is detected and is input as a control signal to TERMINAL A/CS of the engine control module.

(9) Battery signal system

Voltage is constantly applied to TERMINAL BATT of the engine control module. When the ignition SW is turned to on, voltage for engine control module operation is applied via the EFI relay to TERMINAL +B of the engine control module.

(10) Intake air volume signal system

Intake air volume is detected by the mass air flow meter, and is input as a control signal to TERMINAL VG of the engine control module.

(11) STA signal system

To confirm that the engine is cranking, the voltage applied to the starter motor during cranking is detected and is input as a control signal to TERMINAL STA of the engine control module.

(12) Oxygen sensor signal system

The oxygen density in the exhaust gases is detected and is input as a control signal into TERMINAL OX1B of the engine control module. To maintain stable detection performance by the oxygen sensor, a heater is used for warming the sensor. The heater is also controlled by the engine control module (HT1B).

(13) Engine knock signal system

Engine knocking is detected by the knock sensor (Bank 1) and input as a control signal to TERMINAL KNK1 of the engine control module.

(14) Electrical load signal system

When systems which cause a high electrical load such as the rear window defogger, taillight are turned on, a signal is input to TERMINALS ELS1 and ELS2 as a control signal.

(15) Air fuel ratio signal circuit

The air fuel ratio is detected and input as a control signal into TERMINAL A1A+ of the engine control module.

2. Control System

∗ SFI system

The SFI system monitors the engine conditions through the signals, which are input from each sensor to the engine control module. Based on this data and the program memorized in the engine control module, the most appropriate fuel injection timing is decided and current is output to TERMINALS #10, #20, #30 and #40 of the engine control module, operating the injectors (to inject fuel). This is the system which finely controls the fuel injection in response to the driving conditions, through the engine control module.

∗ ESA system

The ESA system monitors the engine conditions using the signals, which are input to the engine control module from each sensor. Based on this data and the program memorized in the engine control module, the most appropriate ignition timing is decided and current is output to TERMINALS IGT1, IGT2, IGT3 and IGT4 of the engine control module. This output controls the ignition coil and igniter No. 1 , No. 2 , No. 3 and No. 4 to produce the most appropriate ignition timing for the driving conditions.

∗ Knock control system

Knock control system controls the gate based on the engine rotation speed and detects knocking by the peak value of the knock sensor (Bank 1) output during the gate open period, and then controls it to the most suitable ignition timing in proportion to the driving condition.

∗ Evapoparge control system

This system leads the vapor stuck to the canister to the serge tank in order not to agitate the air fuel by adjusting the fuel injection volume.

The signal at this time will be output from TERMINAL PRG of the engine control module to VSV (Purge).

3. Diagnosis System

With the diagnosis system, when there is a malfunctioning in the engine control module signal system,the malfunction system is recorded in the memory. The malfunctioning system can be found by reading the display (Code) of the malfunction indicator lamp.

4. Fail–Safe System

When a malfunction occurs in any system, if there is a possibility of engine trouble being caused by continued control based on the signals from that system, the fail–safe system either controls the system by using the data (Standard values) recorded in the engine control module memory or else stops the engine.

○ : Parts Location

Code		See Page	Code		See Page	Code		See Page
A13		38	F10		40	J6	A	39
A24		36 (1ZZ–FE)	H8	A	39	J7		39
A25		38	I2	A	37 (1ZZ–FE)	K1		37 (1ZZ–FE)
C1	A	36 (1ZZ–FE)	I3	A	37 (1ZZ–FE)	L4		41
C2	A	36 (1ZZ–FE)	I4	A	37 (1ZZ–FE)	M1		37 (1ZZ–FE)
C4	A	36 (1ZZ–FE)	I5	A	37 (1ZZ–FE)	P1		37 (1ZZ–FE)
C10		38	I6	A	37 (1ZZ–FE)	P2		37 (1ZZ–FE)
C11		38	I7		37 (1ZZ–FE)	S1	A	37 (1ZZ–FE)
C12		38	I8	A	37 (1ZZ–FE)		B	37 (1ZZ–FE)
D1		38	I9		37 (1ZZ–FE)	S7	A	39
E2		36 (1ZZ–FE)	I11		39	T6		37 (1ZZ–FE)
E3	A	38	J2		39	T10		39
E4	B	38	J3	A	39	V1		37 (1ZZ–FE)
E5	C	38	J4	B	39	V5	A	37 (1ZZ–FE)
E6	D	38	J5	B	39			

▭ : Relay Blocks

Code	See Page	Relay Blocks (Relay Block Location)
1	23	Engine Room R/B (Engine Compartment Left)
3	28	RH R/B (Right Side of the Instrument Panel Reinforcement)

: **Junction Block and Wire Harness Connector**

Code	See Page	Junction Block and Wire Harness (Connector Location)
IC	25	Engine Room Main Wire and Instrument Panel J/B (Lower Finish Panel)
ID	25	Floor Wire and Instrument Panel J/B (Lower Finish Panel)
IG	25	Instrument Panel Wire and Instrument Panel J/B (Lower Finish Panel)
IH		
II		
IJ		
IK	24	
IL		
IM		
1A	23	Engine Wire and Engine Room J/B (Engine Compartment Left)
3B	29	Instrument Panel Wire and RH J/B (Right Side of the Instrument Panel Reinforcement)
3C		
4B	32	Instrument Panel Wire and Center J/B (Behind the Combination Meter)
4C		

: **Connector Joining Wire Harness and Wire Harness**

Code	See Page	Joining Wire Harness and Wire Harness (Connector Location)
EA1	43 (1ZZ–FE)	Engine Wire and Engine Room Main Wire (Inside of the Engine Room R/B)
IA2	44	Engine Room Main Wire and Instrument Panel Wire (Instrument Panel Reinforcement LH)
IA4	44	
IA5		
IA6		
IA7		
ID2	44	Instrument Panel Wire and Floor Wire (Left Kick Panel)
IG1	45	Engine Wire and Instrument Panel Wire (Blower Unit RH)
IG3		

: **Ground Points**

Code	See Page	Ground Points Location
EB	43 (1ZZ–FE)	Front Left Suspension Tower
EC	43 (1ZZ–FE)	Left Side of the Cylinder Head
ED		
IE	44	Behind Combination Meter
IG	44	Right Kick Panel
BH	46	Left Quarter Panel
BI	46	Right Quarter Panel

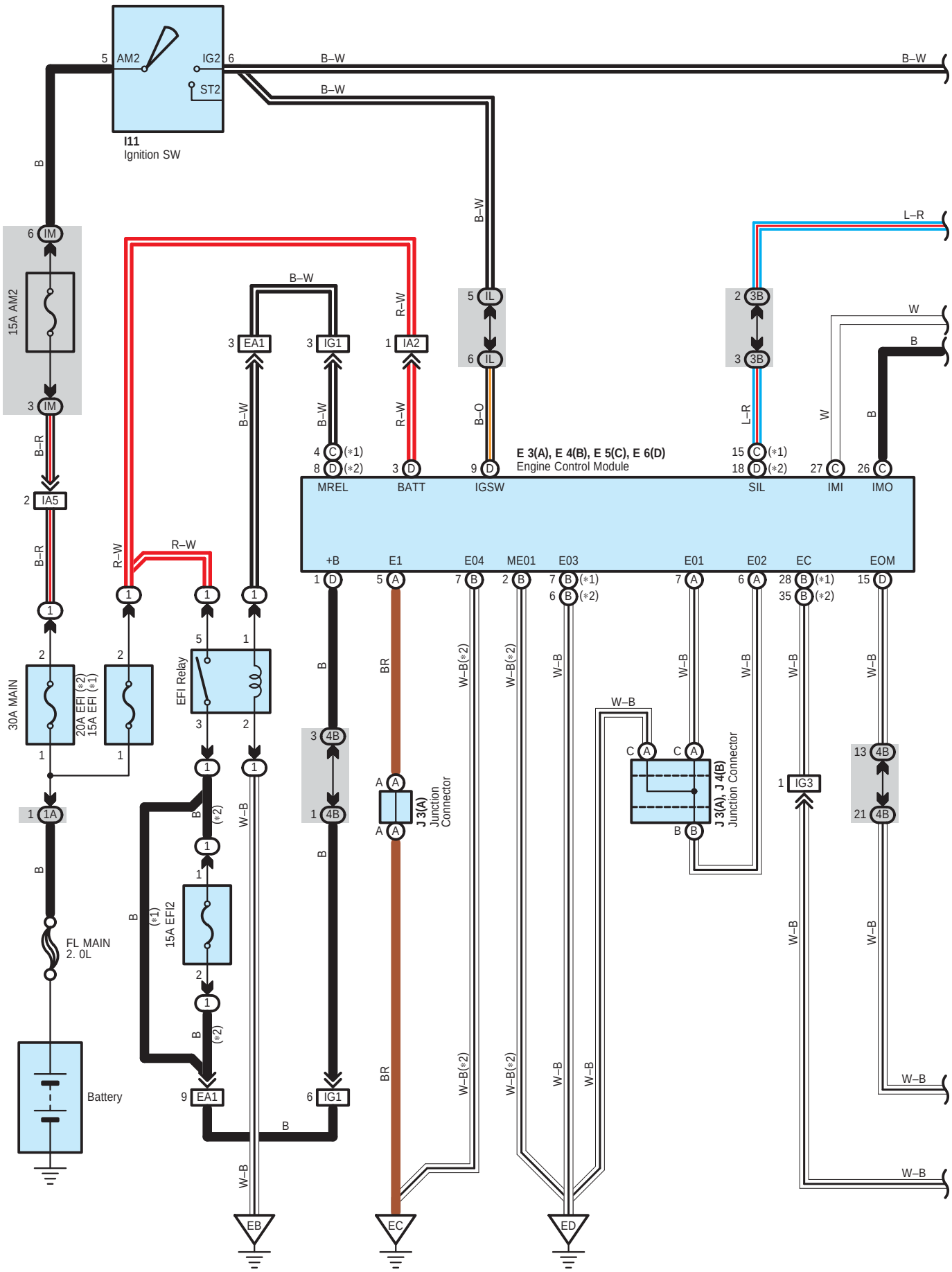
I11
Ignition SW
AM2
IG2
ST2
B–W
B
15A AM2
IM
B–R
IA5
R–W
30A MAIN
20A EFI (*2)
15A EFI (*1)
1A
FL MAIN
2. 0L
Battery
EFI Relay
15A EFI2
EA1
IG1
IA2
IL
3B
L–R
W
B–O
E 3(A), E 4(B), E 5(C), E 6(D)
Engine Control Module
MREL
BATT
IGSW
SIL
IMI
IMO
+B
E1
E04
ME01
E03
E01
E02
EC
EOM
4B
BR
J 3(A)
Junction
Connector
J 3(A), J 4(B)
Junction Connector
IG3
W–B
W–B(*2)
EB
EC
ED

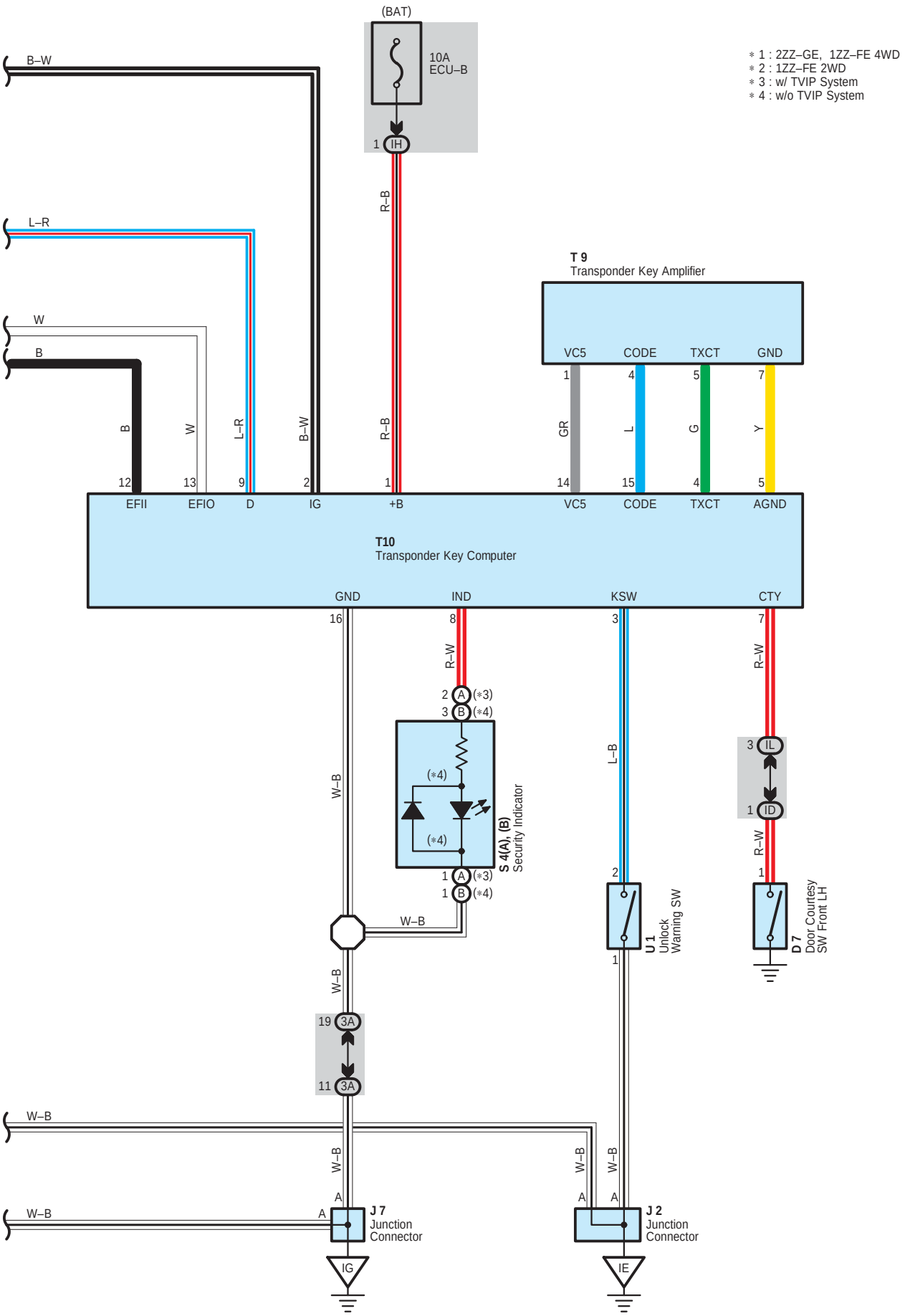
(BAT)
10A
ECU–B
1 IH
B–W
L–R
W
B
R–B
B–W
L–R
W
B
12
13
9
2
1
EFII
EFIO
D
IG
+B
T 9
Transponder Key Amplifier
VC5
CODE
TXCT
GND
1
4
5
7
GR
L
G
Y
14
15
4
5
VC5
CODE
TXCT
AGND
T10
Transponder Key Computer
GND
IND
KSW
CTY
16
8
3
7
R–W
2 A (*3)
3 B (*4)
(*4)
(*4)
S 4(A), (B)
Security Indicator
1 A (*3)
1 B (*4)
W–B
W–B
W–B
L–B
2
1
U 1
Unlock
Warning SW
3 IL
1 ID
R–W
1
D 7
Door Courtesy
SW Front LH
19 3A
11 3A
W–B
W–B
W–B
W–B
W–B
A
A
A
A
J 7
Junction
Connector
J 2
Junction
Connector
IG
IE
* 1 : 2ZZ–GE, 1ZZ–FE 4WD
* 2 : 1ZZ–FE 2WD
* 3 : w/ TVIP System
* 4 : w/o TVIP System

: Parts Location

Code		See Page	Code		See Page	Code		See Page
D7		40	I11		39	S4	A	39
E3	A	38	J2		39		B	39
E4	B	38	J3	A	39	T9		39
E5	C	38	J4	B	39	T10		39
E6	D	38	J7		39	U1		39

: Relay Blocks

Code	See Page	Relay Blocks (Relay Block Location)
1	23	Engine Room R/B (Engine Compartment Left)

: Junction Block and Wire Harness Connector

Code	See Page	Junction Block and Wire Harness (Connector Location)
ID	25	Floor Wire and Instrument Panel J/B (Lower Finish Panel)
IH	25	Instrument Panel Wire and Instrument Panel J/B (Lower Finish Panel)
IL	24	
IM		
1A	23	Engine Wire and Engine Room J/B (Engine Compartment Left)
3A	29	Instrument Panel Wire and RH J/B (Right Side of the Instrument Panel Reinforcement)
3B		
4B	32	Instrument Panel Wire and Center J/B (Behind the Combination Meter)

: Connector Joining Wire Harness and Wire Harness

Code	See Page	Joining Wire Harness and Wire Harness (Connector Location)
EA1	42 (2ZZ–GE)	Engine Wire and Engine Room Main Wire (Inside of the Engine Room R/B)
	43 (1ZZ–FE)	
IA2	44	Engine Room Main Wire and Instrument Panel Wire (Instrument Panel Reinforcement LH)
IA5		
IG1	45	Engine Wire and Instrument Panel Wire (Blower Unit RH)
IG3		

: Ground Points

Code	See Page	Ground Points Location
EB	42 (2ZZ–GE)	Front Left Suspension Tower
	43 (1ZZ–FE)	
EC	42 (2ZZ–GE)	Left Side of the Cylinder Head
	43 (1ZZ–FE)	
ED	42 (2ZZ–GE)	
	43 (1ZZ–FE)	
IE	44	Behind Combination Meter
IG	44	Right Kick Panel

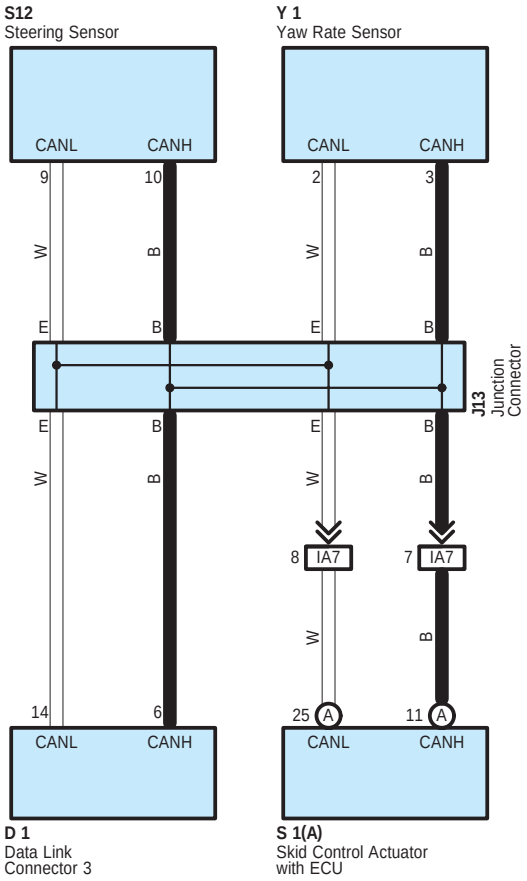
S12
Steering Sensor
Y 1
Yaw Rate Sensor
CANL
CANH
CANL
CANH
9
10
2
3
W
B
W
B
E
B
E
B
J13
Junction
Connector
E
B
E
B
W
B
W
B
8
IA7
7
IA7
W
B
14
6
25
A
11
A
CANL
CANH
CANL
CANH
D 1
Data Link
Connector 3
S 1(A)
Skid Control Actuator
with ECU

System Outline

Multiplex communication system (CAN) uses a serial communication protocol and communicates with a differential voltage. In this network system, TERMINALS CANH and CANL are used for communication between the ECUs and sensors, and excellent data communication speed and communication error detecting facility are provided.

This system is working for the following systems:
* ABS
* TRAC
* VSC

: Parts Location

Code	See Page	Code		See Page	Code	See Page
D1	38	S1	A	37 (1ZZ–FE)	Y1	39
J13	39	S12		39		

: Connector Joining Wire Harness and Wire Harness

Code	See Page	Joining Wire Harness and Wire Harness (Connector Location)
IA7	44	Engine Room Main Wire and Instrument Panel Wire (Instrument Panel Reinforcement LH)

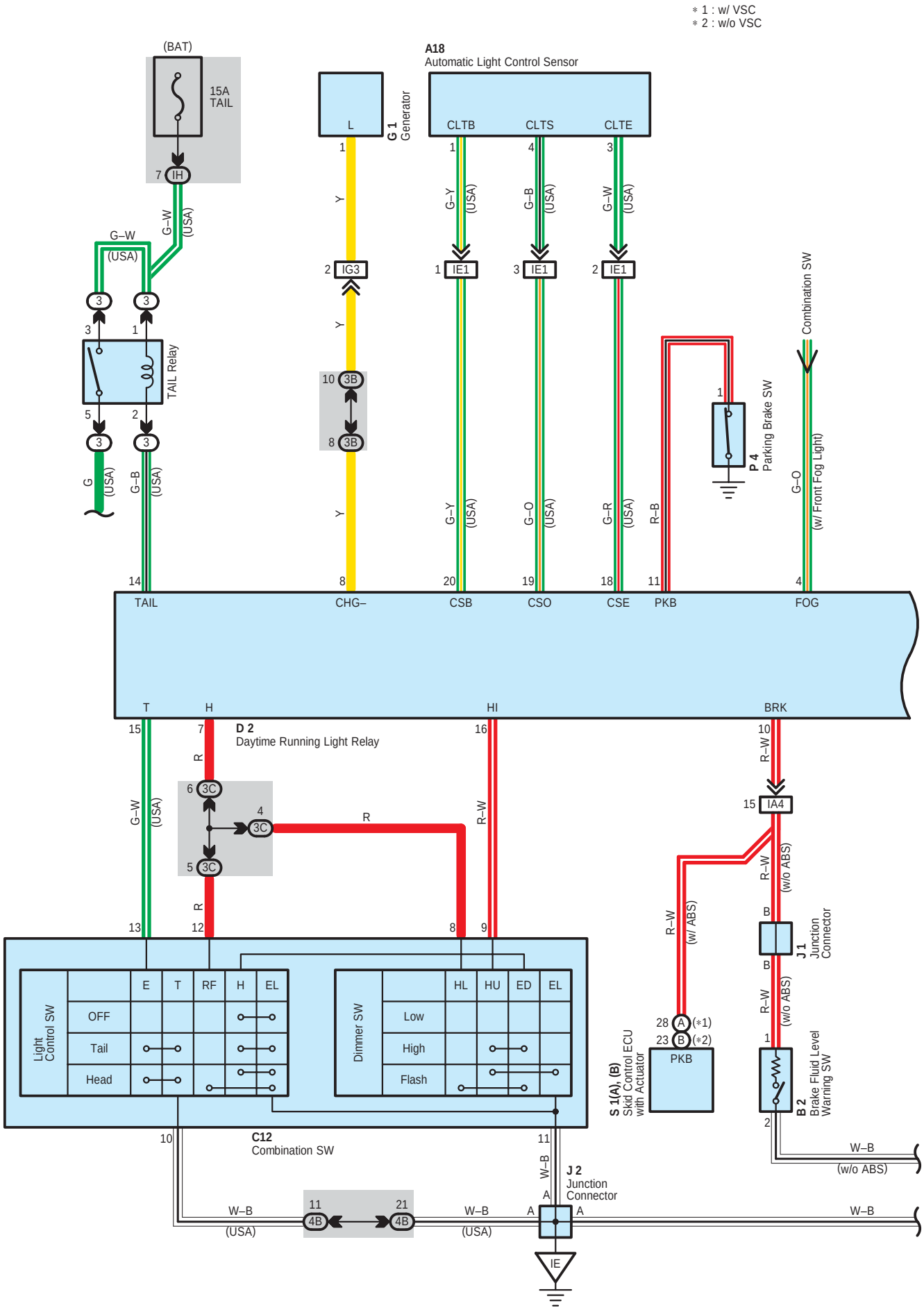
* 1 : w/ VSC
* 2 : w/o VSC
(BAT)
15A
TAIL
7 IH
G–W
(USA)
TAIL Relay
G
(USA)
G–B
(USA)
14
TAIL
G 1
Generator
L
1
Y
2 IG3
Y
10 3B
8 3B
Y
8
CHG–
A18
Automatic Light Control Sensor
CLTB
CLTS
CLTE
G–Y
(USA)
G–B
(USA)
G–W
(USA)
IE1
G–Y
(USA)
G–O
(USA)
G–R
(USA)
20
CSB
19
CSO
18
CSE
R–B
11
PKB
P 4
Parking Brake SW
Combination SW
G–O
(w/ Front Fog Light)
4
FOG
T
H
HI
BRK
15
7
D 2
Daytime Running Light Relay
16
10
R–W
6 3C
4 3C
R
5 3C
R
R–W
15 IA4
R–W
(w/o ABS)
R–W
(w/ ABS)
13
12
8
9
B
J 1
Junction
Connector
B
R–W
(w/o ABS)
Light
Control SW
E
T
RF
H
EL
OFF
Tail
Head
Dimmer SW
HL
HU
ED
EL
Low
High
Flash
28 A (*1)
23 B (*2)
PKB
S 1(A), (B)
Skid Control ECU
with Actuator
1
B 2
Brake Fluid Level
Warning SW
2
W–B
(w/o ABS)
10
C12
Combination SW
11
W–B
J 2
Junction
Connector
A
W–B
(USA)
11
4B
21
4B
W–B
(USA)
A
A
W–B
IE

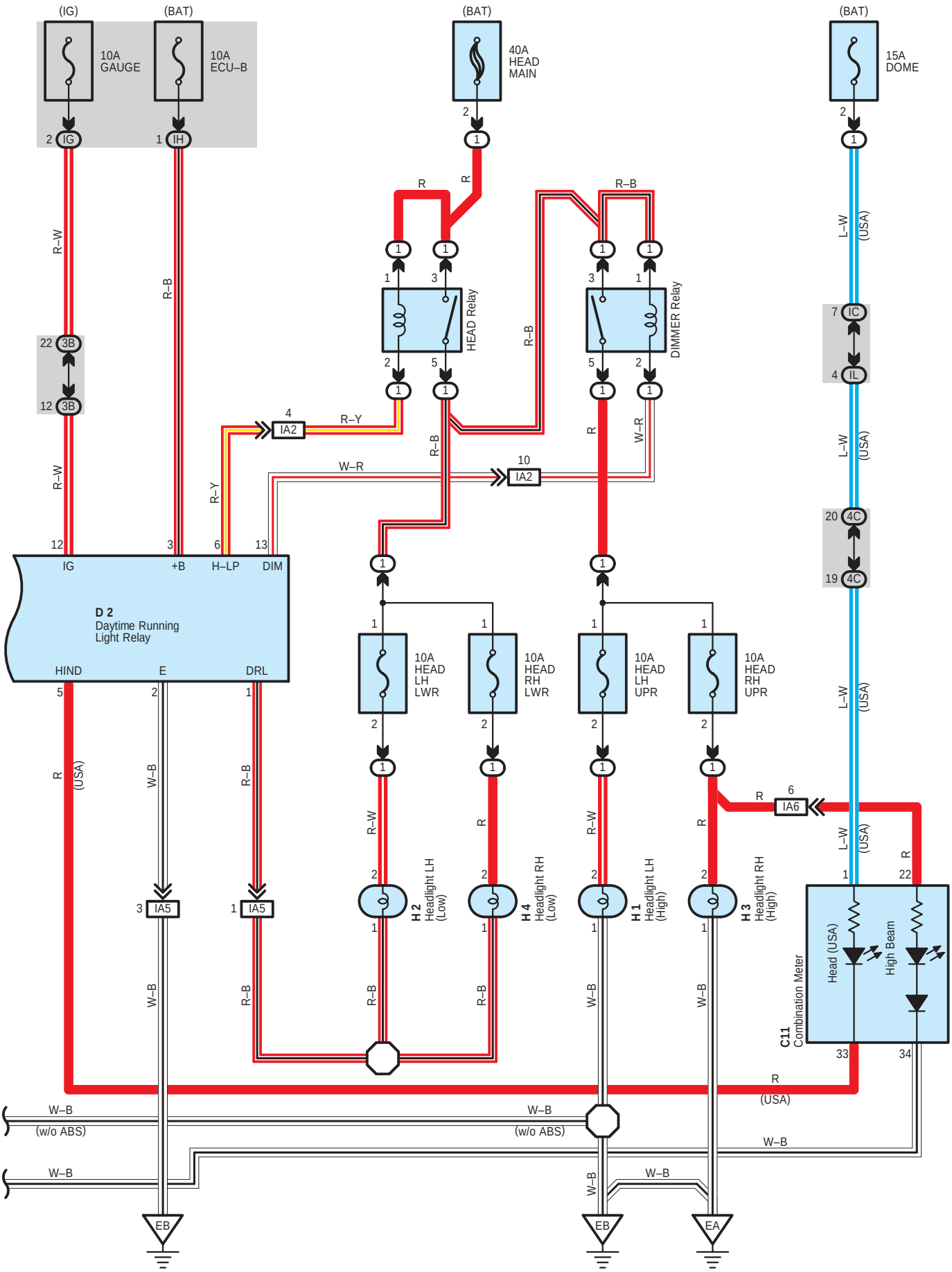
(IG)
(BAT)
10A GAUGE
10A ECU–B
2 IG
1 IH
R–W
R–B
22 3B
12 3B
R–W
12
IG
3
+B
6
H–LP
13
DIM
D 2
Daytime Running Light Relay
HIND
E
DRL
5
2
1
R (USA)
W–B
R–B
3 IA5
1 IA5
W–B
R–B
(BAT)
40A HEAD MAIN
2
1
R
R
1
1
1
3
HEAD Relay
2
5
1
1
4
IA2
R–Y
R–Y
R–B
W–R
10
IA2
R–B
R–B
1
3
1
DIMMER Relay
5
2
1
1
R
W–R
1
1
1
1
10A HEAD LH LWR
10A HEAD RH LWR
10A HEAD LH UPR
10A HEAD RH UPR
2
2
2
2
1
1
1
1
R–W
R
R–W
R
H 2 Headlight LH (Low)
H 4 Headlight RH (Low)
H 1 Headlight LH (High)
H 3 Headlight RH (High)
2
2
2
2
1
1
1
1
R–B
R–B
W–B
W–B
(BAT)
15A DOME
2
1
L–W (USA)
7 IC
4 IL
L–W (USA)
20 4C
19 4C
L–W (USA)
6
IA6
R
L–W (USA)
R
1
22
C11 Combination Meter
Head (USA)
High Beam
33
34
R (USA)
W–B (w/o ABS)
W–B (w/o ABS)
W–B
W–B
W–B
W–B
W–B
EB
EB
EA

System Outline

The current is always flowing from the HEAD MAIN fuse to HEAD relay (Coil side) to TERMINAL 6 of the daytime running light relay and from ECU–B fuse to TERMINAL 3 of the daytime running light relay. The current is always flowing from the TAIL fuse to TAIL relay (Coil side) to TERMINAL 14 of the daytime running light relay.
When the ignition SW is turned on, the current flowing through the GAUGE fuse flows to TERMINAL 12 of the daytime running light relay.

1. Daytime Running Light Operation

When the engine is started, voltage generated at TERMINAL L of the generator is applied to TERMINAL 8 of the daytime running light relay. If the parking brake lever is pulled up (Parking brake SW on) at this time, the relay is not activated so the daytime running light system does not operate. If the parking brake lever is then released (Parking brake SW off), a signal is input to TERMINAL 11 of the relay.
This activates the daytime running light relay and the HEAD relay is turned to on, so the current flows from the HEAD MAIN fuse to the HEAD relay (Point side) to HEAD LH LWR, HEAD RH LWR fuses to TERMINAL 2 of the headlights to TERMINAL 1 to TERMINAL 1 of the daytime running light relay to TERMINAL 2 to GROUND, causing the headlights to light up (Headlights light up dimmer than normal brightness.). Once the daytime running light system operates and the headlights light up, the headlights remain on even if the parking brake lever is pulled up (Parking brake SW on).
If the engine stalls and the ignition SW remains on, the headlights remain light up even through current is no longer output from TERMINAL L of the generator. If the ignition SW is then turned off, the headlights go off.
If the engine is started with the parking brake lever released (Parking brake SW off), the daytime running light system operates and headlights light up when the engine starts.

2. Headlight Operation

When the light control SW is switched to Head position and the dimmer SW is set to Low position, causing the daytime running light relay and the HEAD relay to turn on, so the current flows from the HEAD MAIN fuse to HEAD relay (Coil side) to TERMINAL 6 of the daytime running light relay to TERMINAL 7 to TERMINAL 12 of the light control SW to TERMINAL 11 to GROUND. The current to HEAD relay (Point side) then flows to HEAD LH LWR, HEAD RH LWR fuses to TERMINAL 2 of the headlights (Low) to TERMINAL 1 to TERMINAL 1 of the daytime running light relay to TERMINAL 2 to GROUND, causing the headlights to light up at normal intensity.
When the light control SW is switched to Head position and the dimmer SW is set to High position, the signal from the dimmer SW is input to the daytime running light relay. This activates the daytime running light relay and the HEAD relay is turned on, so the current flows from the HEAD MAIN fuse to HEAD relay (Point side) to TERMINAL 1 of the DIMMER relay to TERMINAL 2 to TERMINAL 13 of the daytime running light relay, activating the DIMMER relay. This causes current to flow from TERMINAL 3 of the DIMMER relay to TERMINAL 5 to HEAD LH UPR, HEAD RH UPR fuses to TERMINAL 2 of the headlights (High) to TERMINAL 1 to GROUND, causing the headlights to light up at high beam and the high beam indicator light to light up.
When the dimmer SW is switched to Flash position, the signal from the dimmer SW is input to the daytime running light relay. This activates the daytime running light relay and the HEAD relay is turned on, so the current flows from the HEAD MAIN fuse to HEAD relay (Point side) to TERMINAL 1 of the DIMMER relay to TERMINAL 2 to TERMINAL 13 of the daytime running light relay, activating the DIMMER relay, and also flows from the HEAD LH UPR, HEAD RH UPR fuses to TERMINAL 2 of the headlights to TERMINAL 1 to GROUND, causing the headlights to light up at high beam and the high beam indicator light to light up.

3. Automatic Light Control Operation (USA)

When the daytime running light is operating and the Automatic control sensor detects a decrease in the ambient light, the automatic light control operation starts. At the same time, daytime running light relay is activated, so current flows from the TAIL fuse to the TAIL relay (Coil side) to TERMINAL 14 of the daytime running light relay, and the HEAD MAIN fuse to the HEAD relay (Coil side) to TERMINAL 6 of the daytime running light relay, activating both the TAIL relay and the HEAD relay, so that the taillights and headlights light up.
When the automatic light control sensor detects an increase in the ambient light, the ignition SW is turned to off, the light control SW is turned to Head position, and the automatic light control operation stops.

○ : **Parts Location**

Code	See Page	Code	See Page	Code		See Page
A18	38	H1	34 (2ZZ–GE)	J1		37 (1ZZ–FE)
B2	34 (2ZZ–GE)		36 (1ZZ–FE)	J2		39
	36 (1ZZ–FE)	H2	34 (2ZZ–GE)	P4		39
C11	38		36 (1ZZ–FE)	S1	A	37 (1ZZ–FE)
C12	38	H3	34 (2ZZ–GE)		B	35 (2ZZ–GE)
D2	38		36 (1ZZ–FE)			37 (1ZZ–FE)
G1	34 (2ZZ–GE)	H4	34 (2ZZ–GE)			
	36 (1ZZ–FE)		36 (1ZZ–FE)			

: **Relay Blocks**

Code	See Page	Relay Blocks (Relay Block Location)
1	23	Engine Room R/B (Engine Compartment Left)
3	28	RH R/B (Right Side of the Instrument Panel Reinforcement)

: **Junction Block and Wire Harness Connector**

Code	See Page	Junction Block and Wire Harness (Connector Location)
IC	25	Engine Room Main Wire and Instrument Panel J/B (Lower Finish Panel)
IG	25	Instrument Panel Wire and Instrument Panel J/B (Lower Finish Panel)
IH		
IL	24	
3B	29	Instrument Panel Wire and RH J/B (Right Side of the Instrument Panel Reinforcement)
3C		
4B	32	Instrument Panel Wire and Center J/B (Behind the Combination Meter)
4C		

: **Connector Joining Wire Harness and Wire Harness**

Code	See Page	Joining Wire Harness and Wire Harness (Connector Location)
IA2	44	Engine Room Main Wire and Instrument Panel Wire (Instrument Panel Reinforcement LH)
IA4		
IA5		
IA6		
IE1	45	Instrument Panel Wire and Instrument Panel No.4 Wire (Behind the Combination Meter)
IG3	45	Engine Wire and Instrument Panel Wire (Blower Unit RH)

: **Ground Points**

Code	See Page	Ground Points Location
EA	42 (2ZZ–GE)	Front Right Fender
	43 (1ZZ–FE)	
EB	42 (2ZZ–GE)	Front Left Suspension Tower
	43 (1ZZ–FE)	
IE	44	Behind Combination Meter

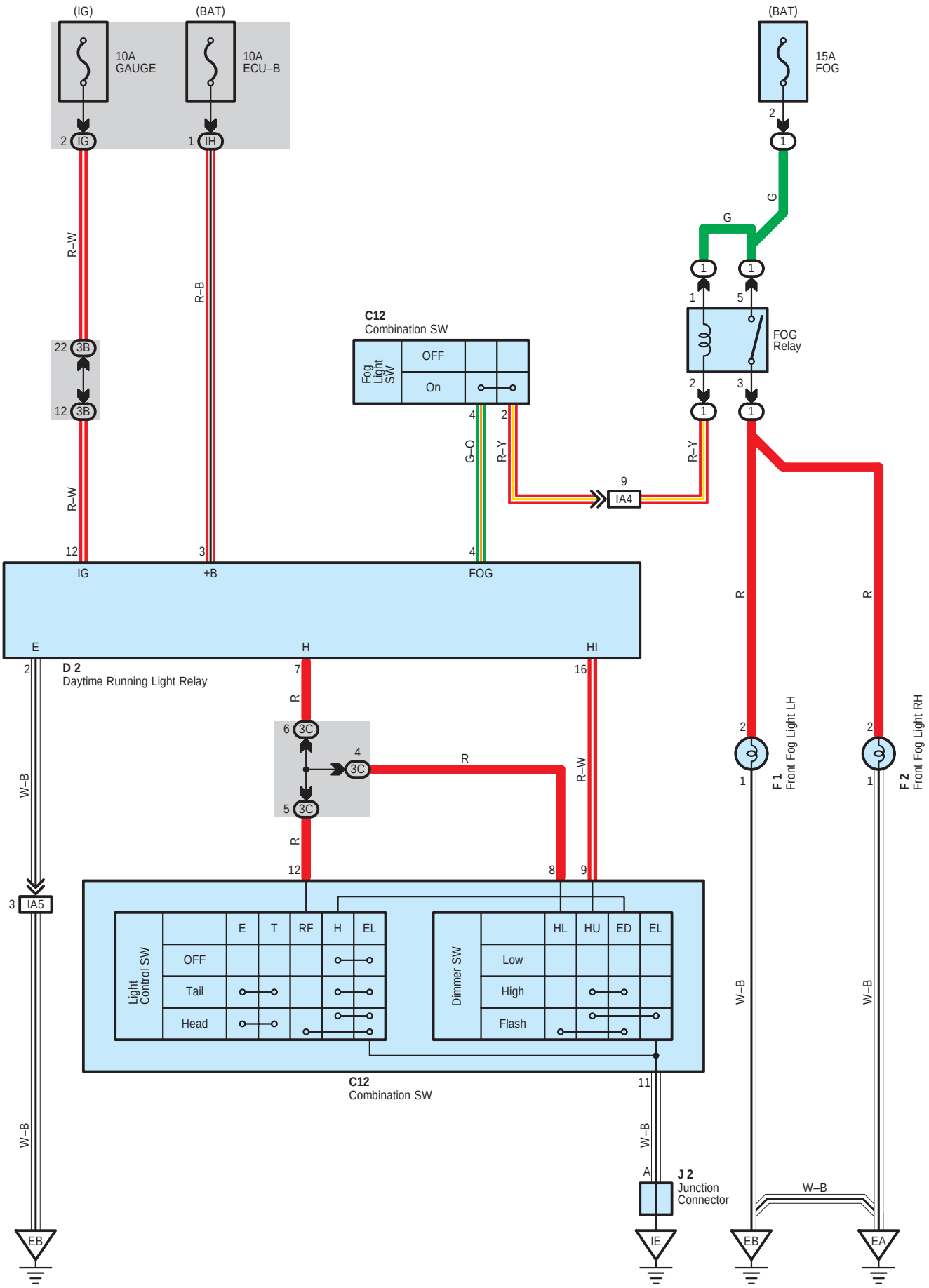
(IG)
(BAT)
10A
GAUGE
10A
ECU–B
2 IG
1 IH
R–W
R–B
22 3B
12 3B
R–W
12
3
IG
+B
(BAT)
15A
FOG
2
1
G
G
1
1
1
5
FOG
Relay
2
3
1
1
C12
Combination SW
Fog
Light
SW
OFF
On
4
2
G–O
R–Y
R–Y
9
IA4
4
FOG
E
H
HI
2
D 2
Daytime Running Light Relay
7
16
R
6 3C
4
3C
R
R–W
5 3C
R
12
8
9
W–B
3 IA5
Light
Control SW
E
T
RF
H
EL
OFF
Tail
Head
Dimmer SW
HL
HU
ED
EL
Low
High
Flash
C12
Combination SW
11
W–B
A
J 2
Junction
Connector
W–B
R
R
2
1
F 1
Front Fog Light LH
2
1
F 2
Front Fog Light RH
W–B
W–B
EB
IE
EB
EA

: Parts Location

Code	See Page	Code	See Page	Code	See Page
C12	38	F1	36 (1ZZ–FE)	J2	39
D2	38	F2	34 (2ZZ–GE)		
F1	34 (2ZZ–GE)		36 (1ZZ–FE)		

: Relay Blocks

Code	See Page	Relay Blocks (Relay Block Location)
1	23	Engine Room R/B (Engine Compartment Left)

: Junction Block and Wire Harness Connector

Code	See Page	Junction Block and Wire Harness (Connector Location)
IG	25	Instrument Panel Wire and Instrument Panel J/B (Lower Finish Panel)
IH		
3B	29	Instrument Panel Wire and RH J/B (Right Side of the Instrument Panel Reinforcement)
3C		

: Connector Joining Wire Harness and Wire Harness

Code	See Page	Joining Wire Harness and Wire Harness (Connector Location)
IA4	44	Engine Room Main Wire and Instrument Panel Wire (Instrument Panel Reinforcement LH)
IA5		

: Ground Points

Code	See Page	Ground Points Location
EA	42 (2ZZ–GE)	Front Right Fender
	43 (1ZZ–FE)	
EB	42 (2ZZ–GE)	Front Left Suspension Tower
	43 (1ZZ–FE)	
IE	44	Behind Combination Meter

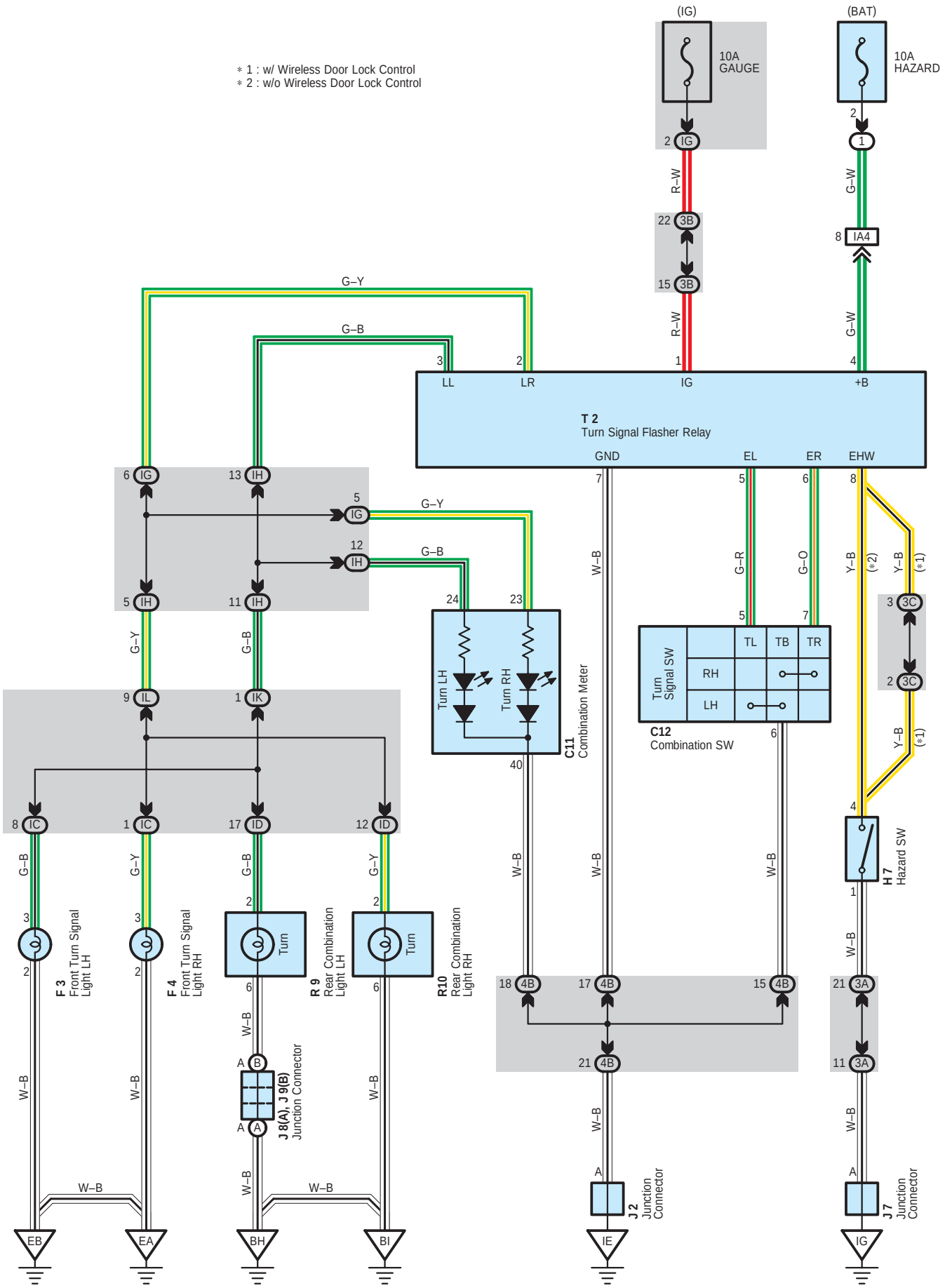
* 1 : w/ Wireless Door Lock Control
* 2 : w/o Wireless Door Lock Control
(IG)
10A GAUGE
(BAT)
10A HAZARD
T 2
Turn Signal Flasher Relay
LL
LR
IG
+B
GND
EL
ER
EHW
C11
Combination Meter
Turn LH
Turn RH
C12
Combination SW
Turn Signal SW
TL
TB
TR
RH
LH
H 7
Hazard SW
F 3
Front Turn Signal Light LH
F 4
Front Turn Signal Light RH
R 9
Rear Combination Light LH
R10
Rear Combination Light RH
J 8(A), J 9(B)
Junction Connector
J 2
Junction Connector
J 7
Junction Connector
EB
EA
BH
BI
IE
IG

○ : Parts Location

Code	See Page	Code	See Page	Code	See Page
C11	38	F4	36 (1ZZ–FE)	J9 B	40
C12	38	H7	39	R9	41
F3	34 (2ZZ–GE)	J2	39	R10	41
	36 (1ZZ–FE)	J7	39	T2	39
F4	34 (2ZZ–GE)	J8 A	40		

: Relay Blocks

Code	See Page	Relay Blocks (Relay Block Location)
1	23	Engine Room R/B (Engine Compartment Left)

: Junction Block and Wire Harness Connector

Code	See Page	Junction Block and Wire Harness (Connector Location)
IC	25	Engine Room Main Wire and Instrument Panel J/B (Lower Finish Panel)
ID	25	Floor Wire and Instrument Panel J/B (Lower Finish Panel)
IG	25	Instrument Panel Wire and Instrument Panel J/B (Lower Finish Panel)
IH		
IK	24	
IL		
3A	29	Instrument Panel Wire and RH J/B (Right Side of the Instrument Panel Reinforcement)
3B		
3C		
4B	32	Instrument Panel Wire and Center J/B (Behind the Combination Meter)

: Connector Joining Wire Harness and Wire Harness

Code	See Page	Joining Wire Harness and Wire Harness (Connector Location)
IA4	44	Engine Room Main Wire and Instrument Panel Wire (Instrument Panel Reinforcement LH)

: Ground Points

Code	See Page	Ground Points Location
EA	42 (2ZZ–GE)	Front Right Fender
	43 (1ZZ–FE)	
EB	42 (2ZZ–GE)	Front Left Suspension Tower
	43 (1ZZ–FE)	
IE	44	Behind Combination Meter
IG	44	Right Kick Panel
BH	46	Left Quarter Panel
BI	46	Right Quarter Panel

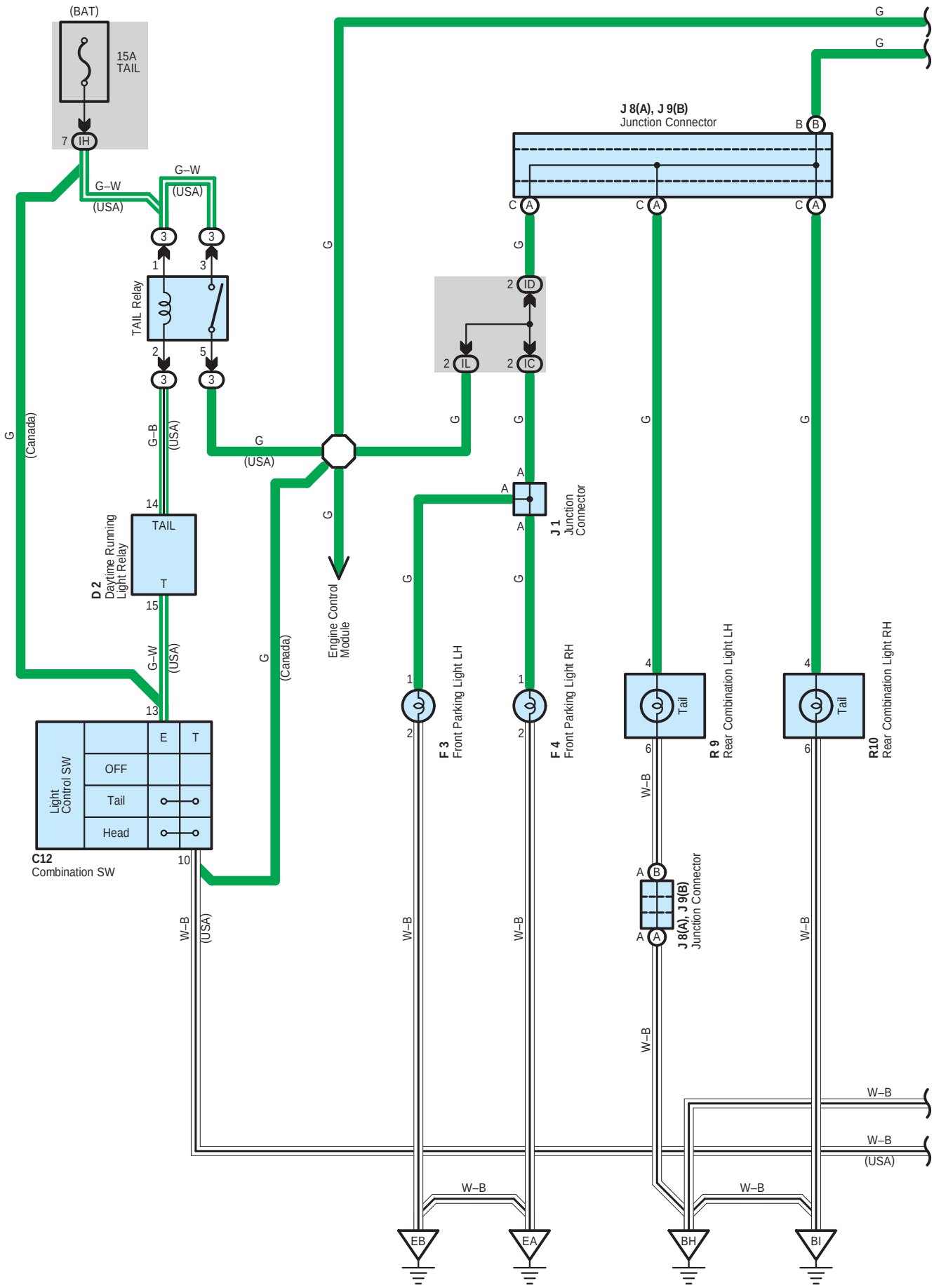
(BAT)
15A
TAIL
7 IH
G–W
(USA)
TAIL Relay
G–B
(USA)
G
(Canada)
14
TAIL
T
15
D 2
Daytime Running
Light Relay
G–W
(USA)
13
Light
Control SW
E
T
OFF
Tail
Head
C12
Combination SW
10
W–B
(USA)
G
(USA)
G
(Canada)
Engine Control
Module
J 8(A), J 9(B)
Junction Connector
B B
C A
2 ID
2 IL
2 IC
A
J 1
Junction
Connector
F 3
Front Parking Light LH
F 4
Front Parking Light RH
R 9
Rear Combination Light LH
R10
Rear Combination Light RH
Tail
W–B
EB
EA
BH
BI

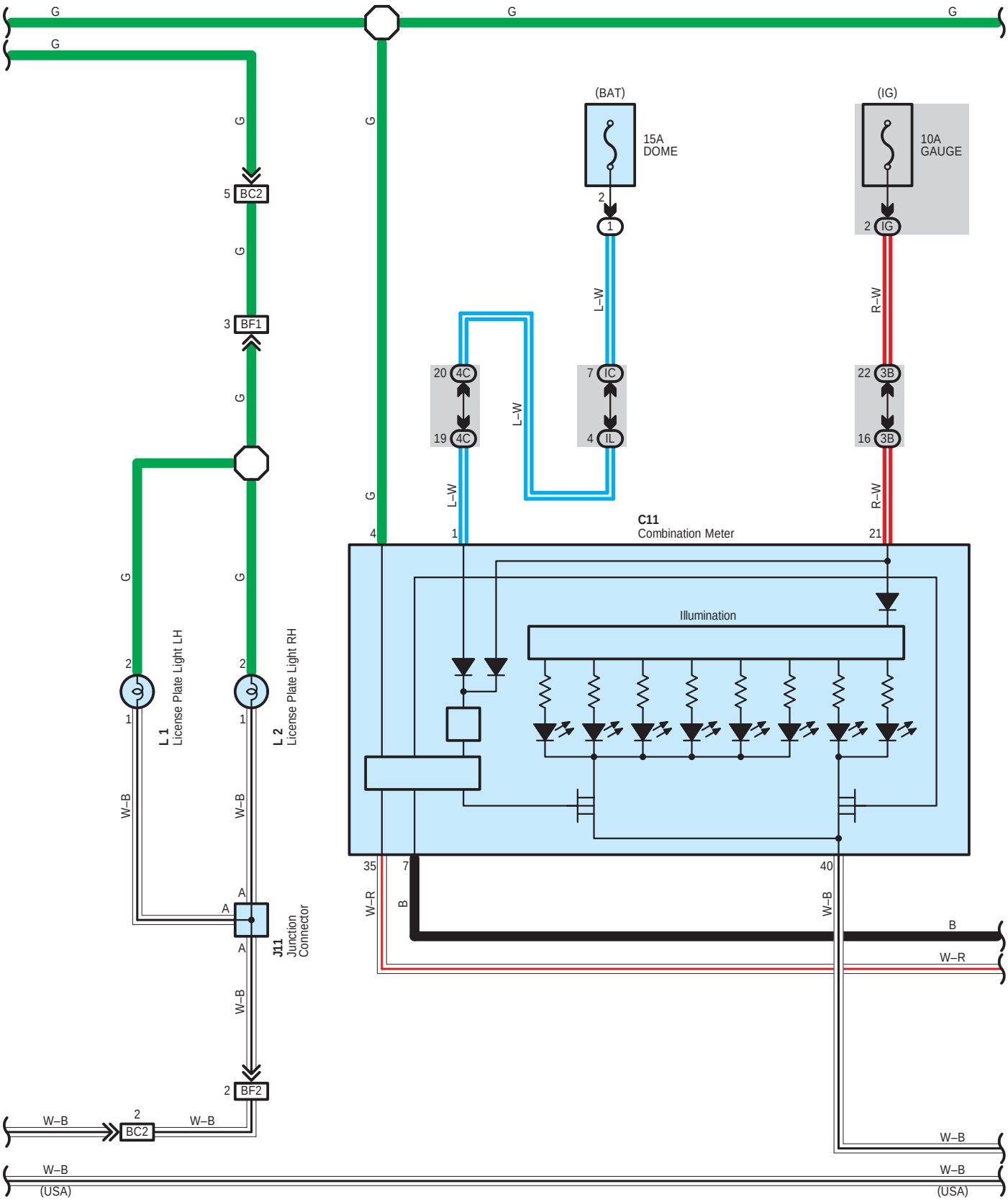
G
G
G
G
G
G
G
G
G
G
5 BC2
3 BF1
2 BF2
2 BC2
W–B
W–B
W–B
W–B
W–B
W–B
(USA)
(USA)
(BAT)
15A
DOME
2
1
L–W
(IG)
10A
GAUGE
2 IG
R–W
20 4C
19 4C
L–W
L–W
7 IC
4 IL
22 3B
16 3B
R–W
C11
Combination Meter
4
1
21
Illumination
35
7
40
W–R
B
W–B
B
W–R
L 1
License Plate Light LH
L 2
License Plate Light RH
2
1
2
1
A
A
A
J11
Junction
Connector

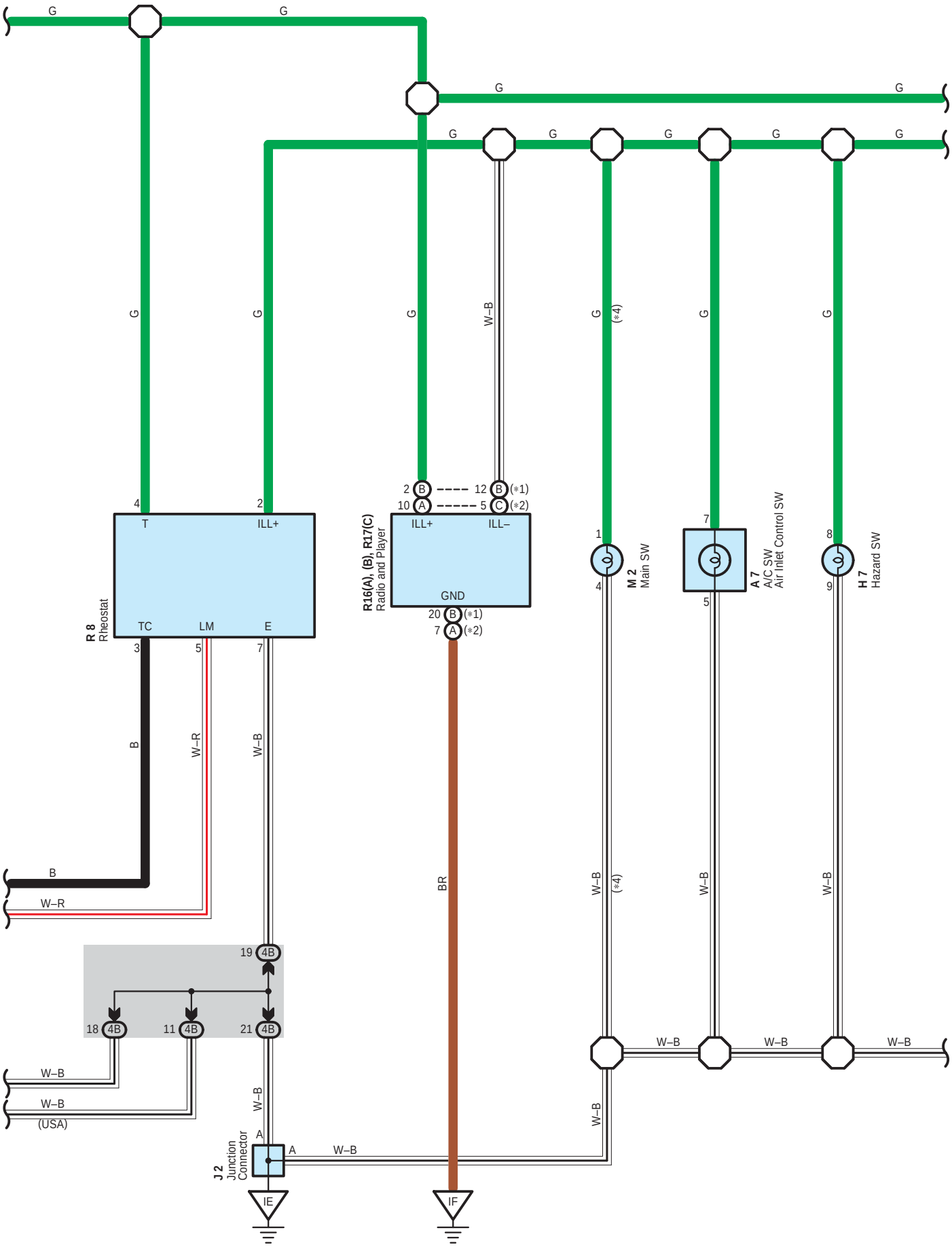
G
W–B
B
W–R
BR
(*4)
R 8
Rheostat
T
ILL+
TC
LM
E
R16(A), (B), R17(C)
Radio and Player
ILL–
GND
(*1)
(*2)
M 2
Main SW
A 7
A/C SW
Air Inlet Control SW
H 7
Hazard SW
4B
(USA)
J 2
Junction
Connector
IE
IF

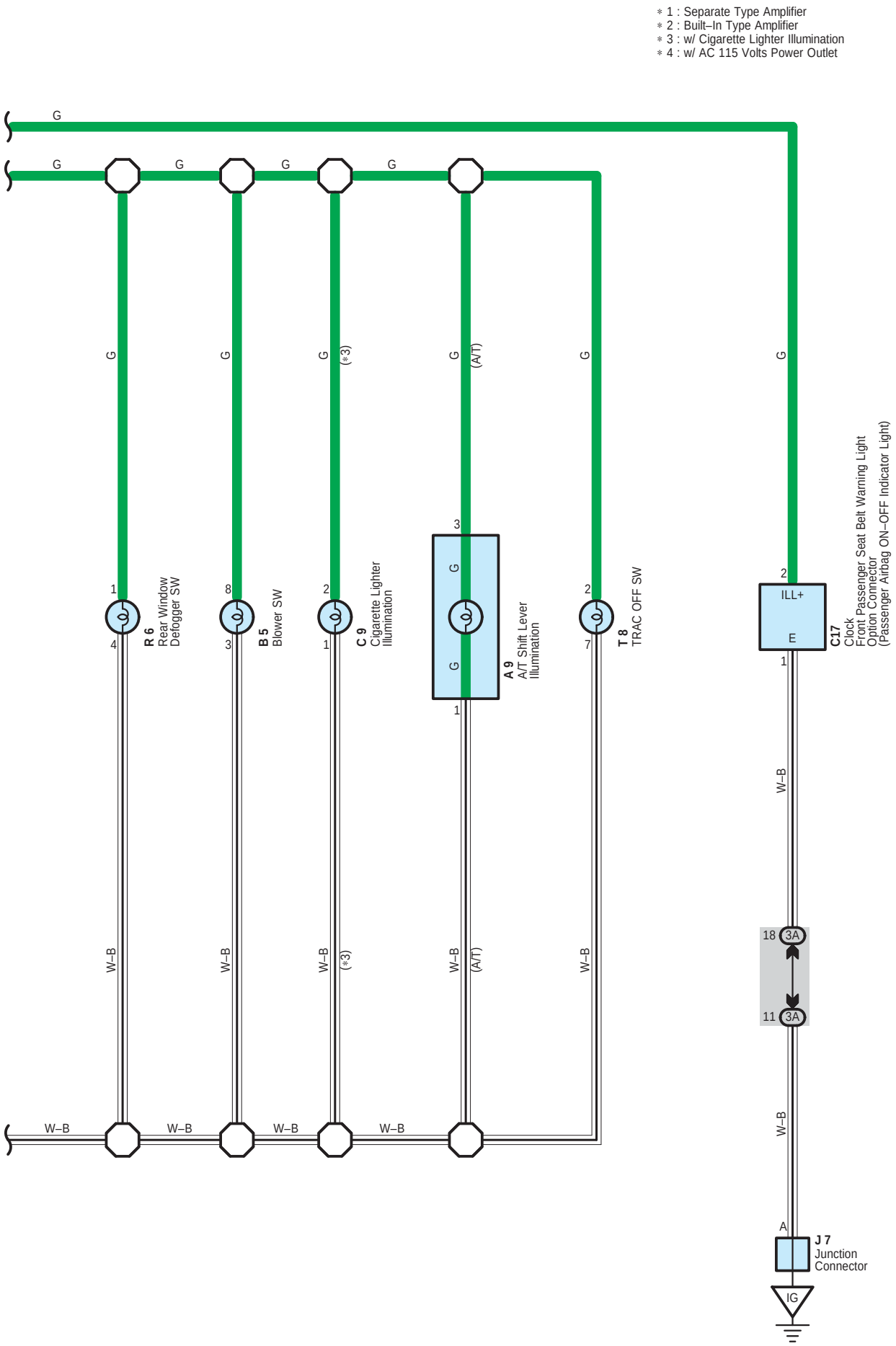
* 1 : Separate Type Amplifier
* 2 : Built–In Type Amplifier
* 3 : w/ Cigarette Lighter Illumination
* 4 : w/ AC 115 Volts Power Outlet
G
W–B
(*3)
(A/T)
R 6
Rear Window
Defogger SW
B 5
Blower SW
C 9
Cigarette Lighter
Illumination
A 9
A/T Shift Lever
Illumination
T 8
TRAC OFF SW
ILL+
E
C17
Clock
Front Passenger Seat Belt Warning Light
Option Connector
(Passenger Airbag ON–OFF Indicator Light)
3A
J 7
Junction
Connector
IG

○ : **Parts Location**

Code	See Page	Code	See Page	Code	See Page
A7	38	F4	36 (1ZZ–FE)	M2	39
A9	38	H7	39	R6	39
B5	38	J1	35 (2ZZ–GE)	R8	39
C9	38		37 (1ZZ–FE)	R9	41
C11	38	J2	39	R10	41
C12	38	J7	39	R16 A	39
C17	38	J8 A	40	R16 B	39
D2	38	J9 B	40	R17 C	39
F3	34 (2ZZ–GE)	J11	40	T8	39
	36 (1ZZ–FE)	L1	41		
F4	34 (2ZZ–GE)	L2	41		

: **Relay Blocks**

Code	See Page	Relay Blocks (Relay Block Location)
1	23	Engine Room R/B (Engine Compartment Left)
3	28	RH R/B (Right Side of the Instrument Panel Reinforcement)

: **Junction Block and Wire Harness Connector**

Code	See Page	Junction Block and Wire Harness (Connector Location)
IC	25	Engine Room Main Wire and Instrument Panel J/B (Lower Finish Panel)
ID	25	Floor Wire and Instrument Panel J/B (Lower Finish Panel)
IG	25	Instrument Panel Wire and Instrument Panel J/B (Lower Finish Panel)
IH		
IL	24	
3A	29	Instrument Panel Wire and RH J/B (Right Side of the Instrument Panel Reinforcement)
3B		
4B	32	Instrument Panel Wire and Center J/B (Behind the Combination Meter)
4C		

: **Connector Joining Wire Harness and Wire Harness**

Code	See Page	Joining Wire Harness and Wire Harness (Connector Location)
BC2	46	Back Door No.1 Wire and Floor Wire (Left Quarter Panel)
BF1	46	Back Door No.1 Wire and Back Door No.2 Wire (Back Panel LH)
BF2		

: **Ground Points**

Code	See Page	Ground Points Location
EA	42 (2ZZ–GE)	Front Right Fender
	43 (1ZZ–FE)	
EB	42 (2ZZ–GE)	Front Left Suspension Tower
	43 (1ZZ–FE)	
IE	44	Behind Combination Meter
IF		
IG	44	Right Kick Panel
BH	46	Left Quarter Panel
BI	46	Right Quarter Panel

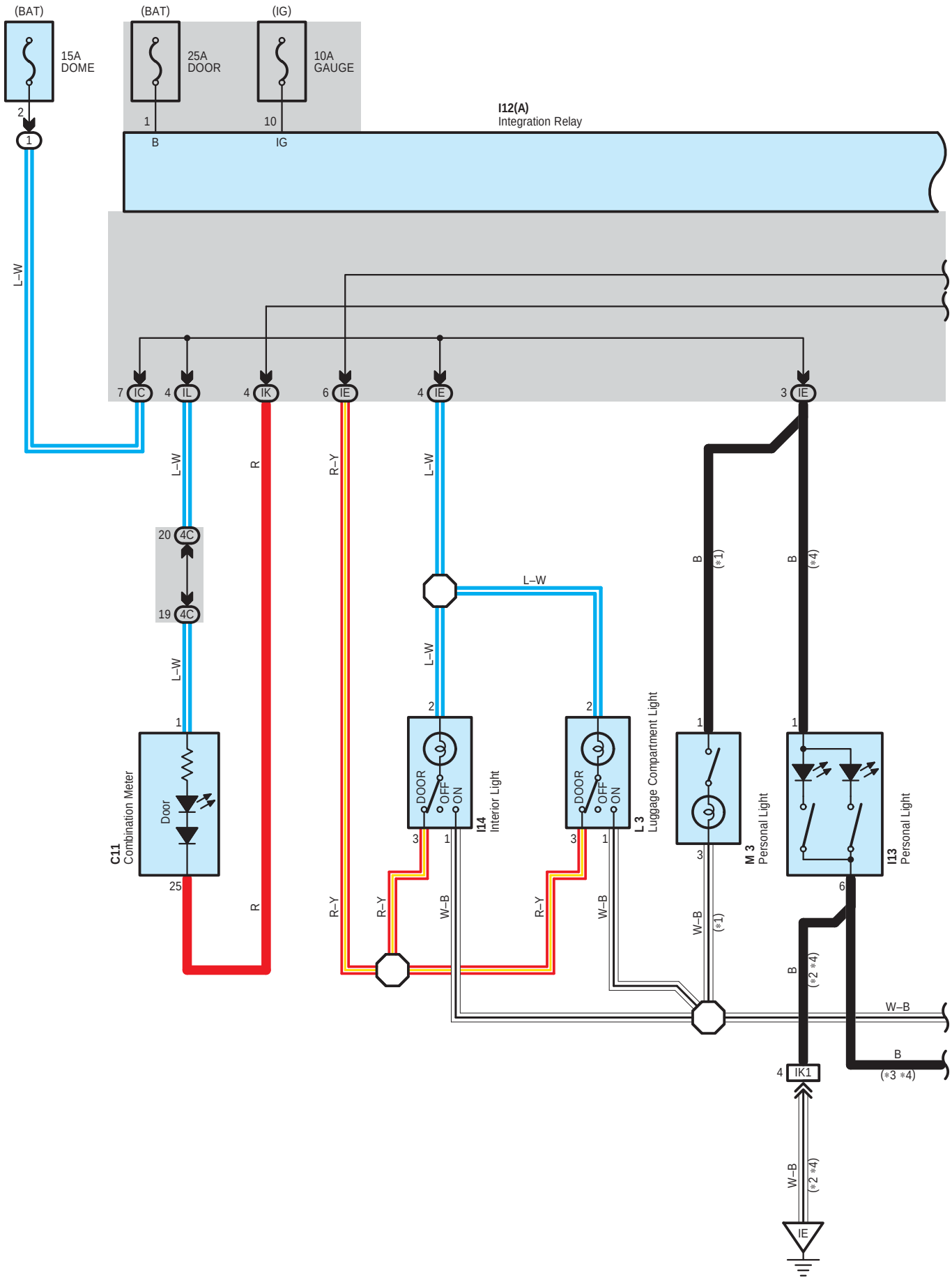
(BAT)
15A
DOME
(BAT)
25A
DOOR
(IG)
10A
GAUGE
I12(A)
Integration Relay
B
IG
L–W
7 IC
4 IL
4 IK
6 IE
4 IE
3 IE
R
R–Y
20 4C
19 4C
C11
Combination Meter
Door
25
DOOR
OFF
ON
I14
Interior Light
L 3
Luggage Compartment Light
M 3
Personal Light
I13
Personal Light
W–B
B
(*1)
(*4)
(*2 *4)
(*3 *4)
4 IK1
IE

∗ 1 : w/ Moon Roof
∗ 2 : w/ Automatic Glare–Resistant EC Mirror
∗ 3 : w/o Automatic Glare–Resistant EC Mirror
∗ 4 : w/o Moon Roof

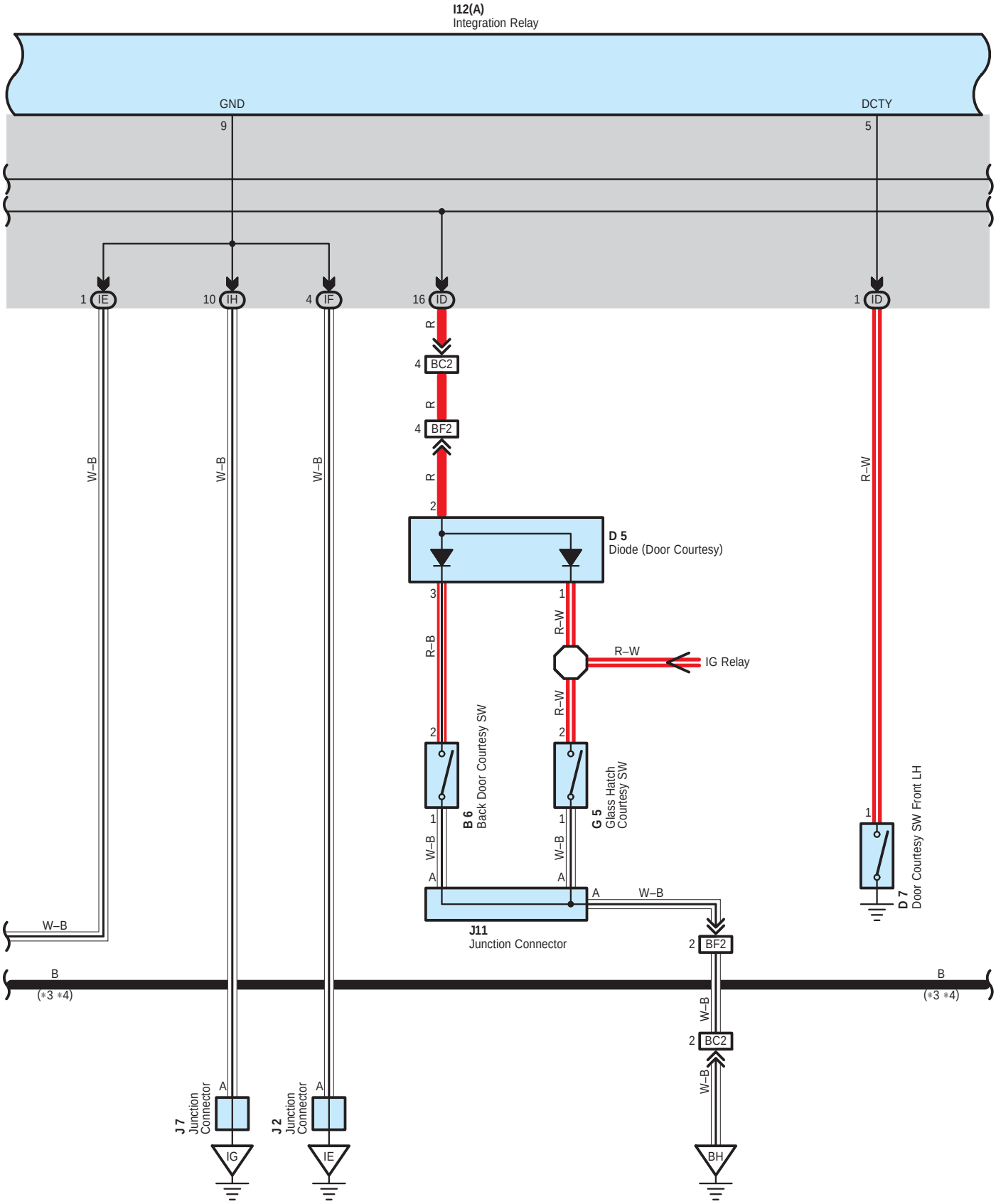

∗ 3 : w/o Automatic Glare–Resistant EC Mirror
∗ 4 : w/o Moon Roof
∗ 5 : w/o Door Lock Control
∗ 6 : w/ Door Lock Control
∗ 7 : Separate Type Amplifier
∗ 8 : Built–in Type Amplifier

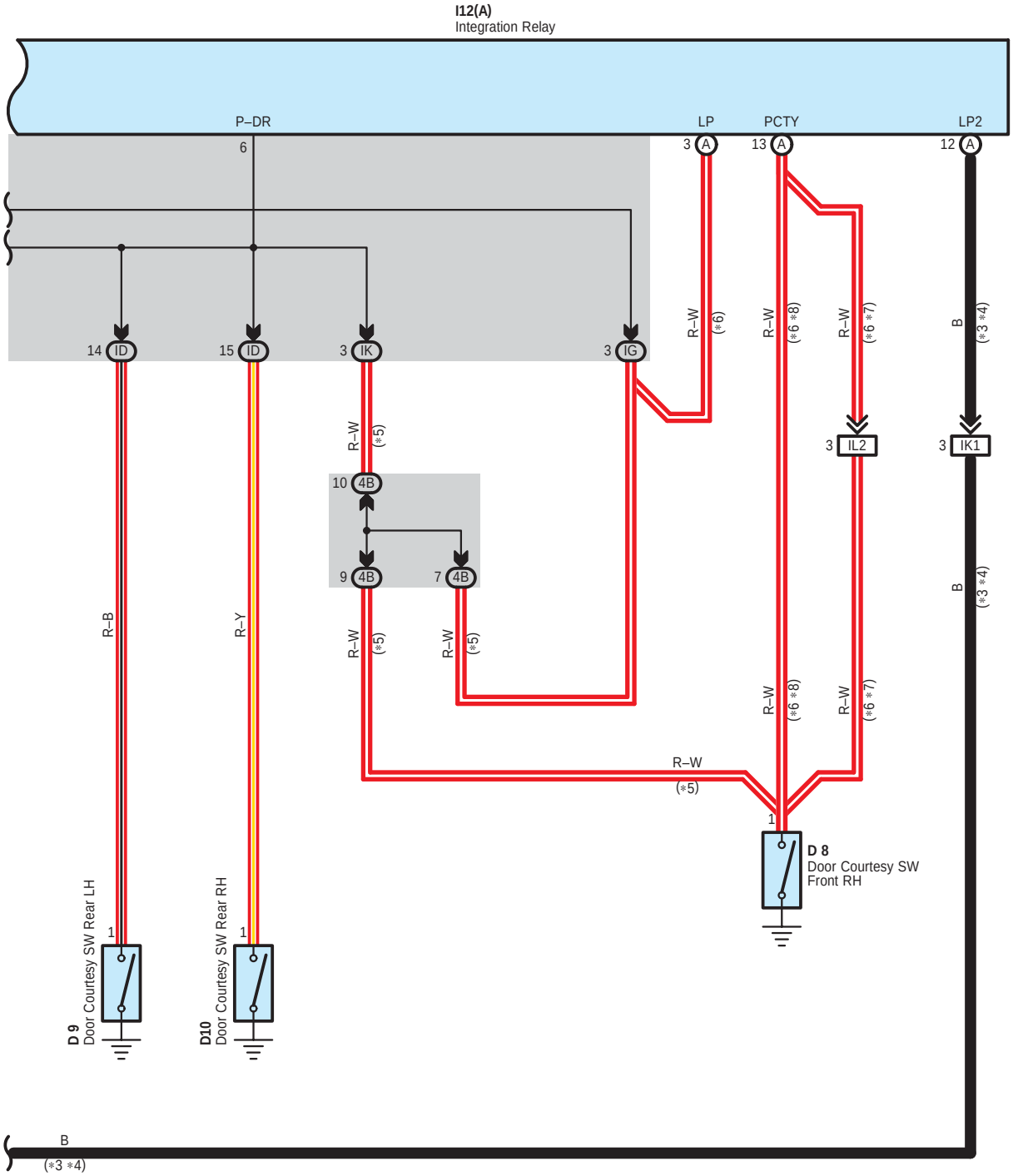

○ : Parts Location

Code	See Page	Code	See Page	Code	See Page
B6	40	D10	40	J7	39
C11	38	G5	40	J11	40
D5	40	I12 A	39	L3	41
D7	40	I13	40	M3	41
D8	40	I14	40		
D9	40	J2	39		

: Relay Blocks

Code	See Page	Relay Blocks (Relay Block Location)
1	23	Engine Room R/B (Engine Compartment Left)

: Junction Block and Wire Harness Connector

Code	See Page	Junction Block and Wire Harness (Connector Location)
IC	25	Engine Room Main Wire and Instrument Panel J/B (Lower Finish Panel)
ID	25	Floor Wire and Instrument Panel J/B (Lower Finish Panel)
IE	25	Roof Wire and Instrument Panel J/B (Lower Finish Panel)
IF	25	Instrument Panel Wire and Instrument Panel J/B (Lower Finish Panel)
IG		
IH		
IK	24	
IL		
4B	32	Instrument Panel Wire and Center J/B (Behind the Combination Meter)
4C		

: Connector Joining Wire Harness and Wire Harness

Code	See Page	Joining Wire Harness and Wire Harness (Connector Location)
IK1	45	Roof Wire and Instrument Panel Wire (Instrument Panel Reinforcement LH)
IL2	45	Floor Wire and Instrument Panel Wire (Right Kick Panel)
BC2	46	Back Door No.1 Wire and Floor Wire (Left Quarter Panel)
BF2	46	Back Door No.1 Wire and Back Door No.2 Wire (Back Panel LH)

▽ : Ground Points

Code	See Page	Ground Points Location
IE	44	Behind Combination Meter
IG	44	Right Kick Panel
BH	46	Left Quarter Panel

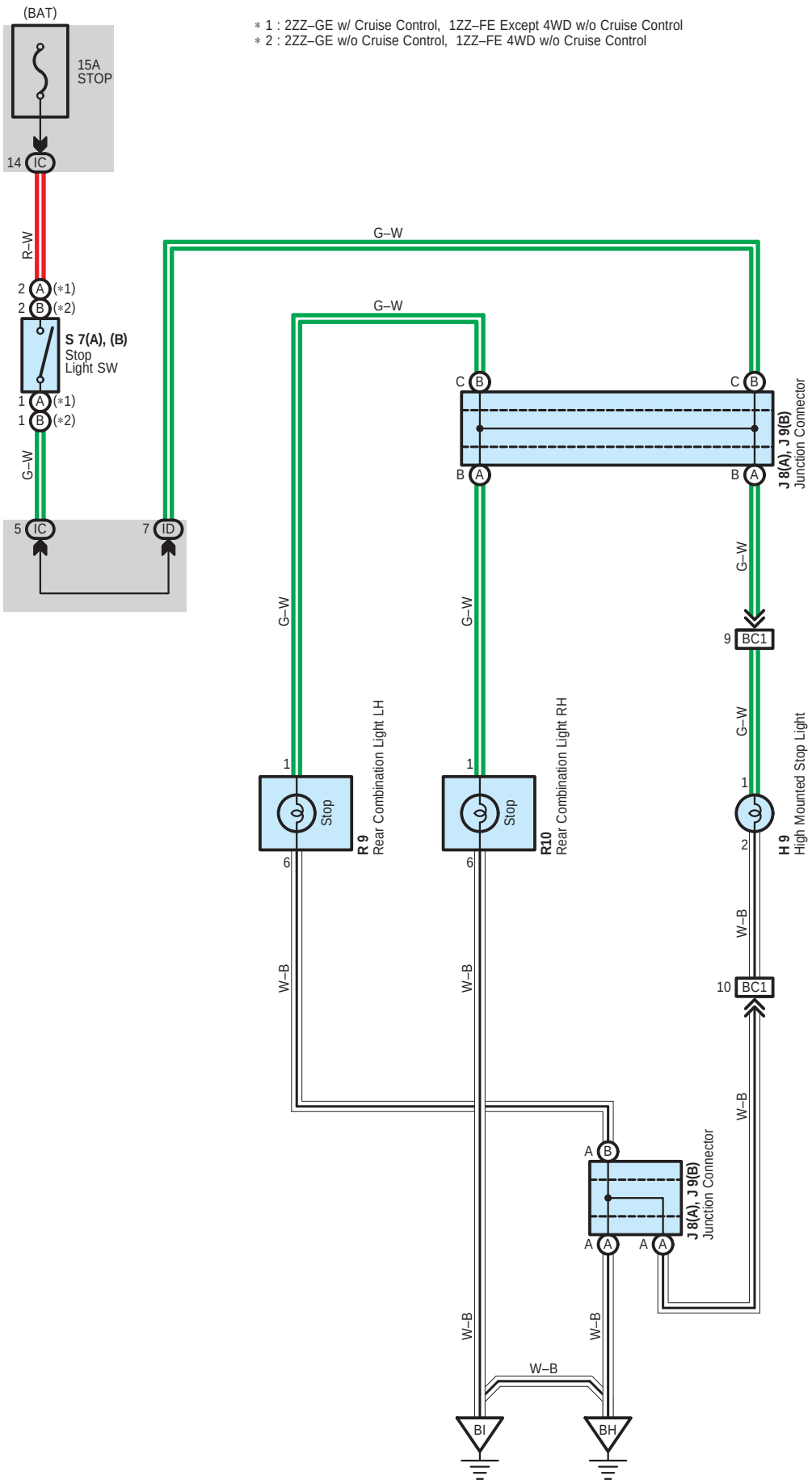

* 1 : 2ZZ–GE w/ Cruise Control, 1ZZ–FE Except 4WD w/o Cruise Control
* 2 : 2ZZ–GE w/o Cruise Control, 1ZZ–FE 4WD w/o Cruise Control

○ : **Parts Location**

Code		See Page	Code		See Page	Code		See Page
H9		40	R9		41	S7	B	39
J8	A	40	R10		41			
J9	B	40	S7	A	39			

: **Junction Block and Wire Harness Connector**

Code	See Page	Junction Block and Wire Harness (Connector Location)
IC	25	Engine Room Main Wire and Instrument Panel J/B (Lower Finish Panel)
ID	25	Floor Wire and Instrument Panel J/B (Lower Finish Panel)

: **Connector Joining Wire Harness and Wire Harness**

Code	See Page	Joining Wire Harness and Wire Harness (Connector Location)
BC1	46	Back Door No.1 Wire and Floor Wire (Left Quarter Panel)

: **Ground Points**

Code	See Page	Ground Points Location
BH	46	Left Quarter Panel
BI	46	Right Quarter Panel

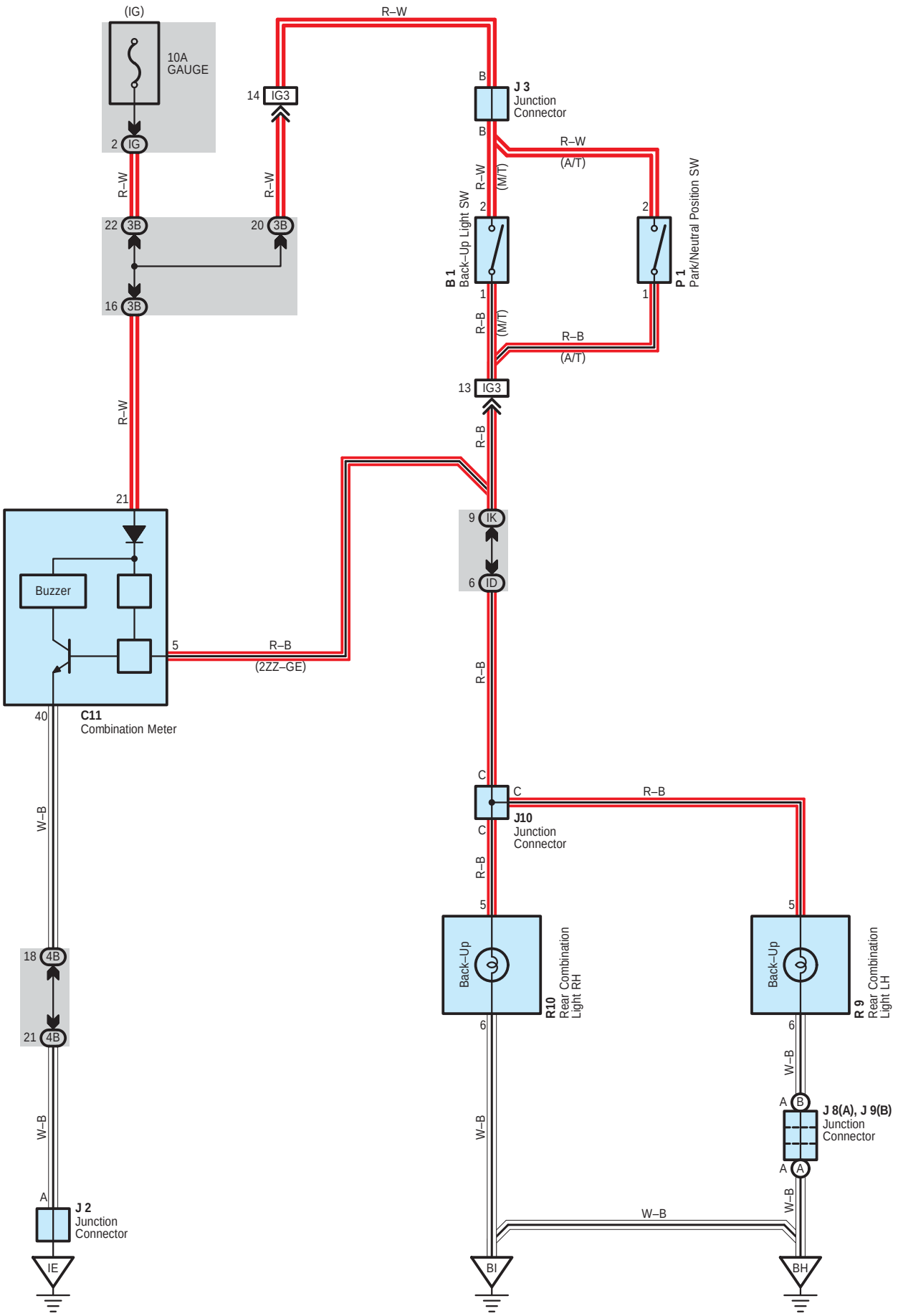
(IG)
10A
GAUGE
2 IG
R–W
22 3B
16 3B
R–W
14 IG3
20 3B
R–W
R–W
B
J 3
Junction
Connector
B
R–W
(A/T)
R–W
(M/T)
2
B 1
Back–Up Light SW
1
2
P 1
Park/Neutral Position SW
1
R–B
(M/T)
R–B
(A/T)
13 IG3
R–B
R–W
21
Buzzer
5
R–B
(2ZZ–GE)
40
C11
Combination Meter
9 IK
6 ID
R–B
C
C
R–B
J10
Junction
Connector
C
R–B
5
Back–Up
R10
Rear Combination
Light RH
5
Back–Up
R 9
Rear Combination
Light LH
W–B
18 4B
21 4B
W–B
6
W–B
6
W–B
A B
J 8(A), J 9(B)
Junction
Connector
A A
W–B
W–B
A
J 2
Junction
Connector
IE
BI
BH

○ : **Parts Location**

Code	See Page	Code	See Page	Code	See Page
B1	34 (2ZZ–GE)	J3	39	P1	37 (1ZZ–FE)
	36 (1ZZ–FE)	J8 A	40	R9	41
C11	38	J9 B	40	R10	41
J2	39	J10	40		

: **Junction Block and Wire Harness Connector**

Code	See Page	Junction Block and Wire Harness (Connector Location)
ID	25	Floor Wire and Instrument Panel J/B (Lower Finish Panel)
IG	25	Instrument Panel Wire and Instrument Panel J/B (Lower Finish Panel)
IK	24	
3B	29	Instrument Panel Wire and RH J/B (Right Side of the Instrument Panel Reinforcement)
4B	32	Instrument Panel Wire and Center J/B (Behind the Combination Meter)

: **Connector Joining Wire Harness and Wire Harness**

Code	See Page	Joining Wire Harness and Wire Harness (Connector Location)
IG3	45	Engine Wire and Instrument Panel Wire (Blower Unit RH)

: **Ground Points**

Code	See Page	Ground Points Location
IE	44	Behind Combination Meter
BH	46	Left Quarter Panel
BI	46	Right Quarter Panel

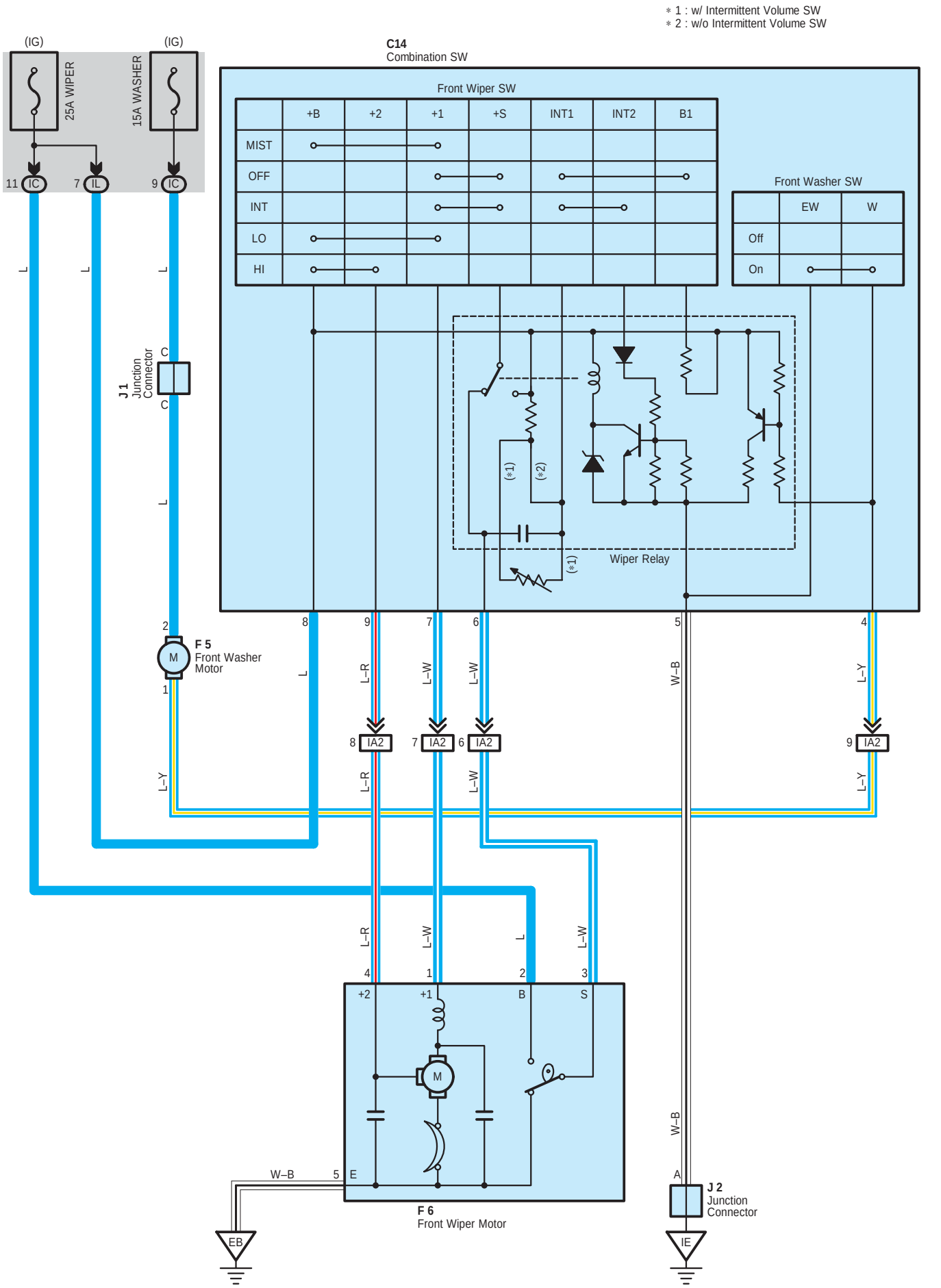
* 1 : w/ Intermittent Volume SW
* 2 : w/o Intermittent Volume SW
(IG)
(IG)
25A WIPER
15A WASHER
11 IC
7 IL
9 IC
C14
Combination SW
Front Wiper SW
+B
+2
+1
+S
INT1
INT2
B1
MIST
OFF
INT
LO
HI
Front Washer SW
EW
W
Off
On
J 1
Junction
Connector
C
C
(*1)
(*2)
(*1)
Wiper Relay
F 5
Front Washer
Motor
M
8
9
7
6
5
4
2
1
L
L–R
L–W
L–W
W–B
L–Y
8 IA2
7 IA2
6 IA2
9 IA2
L–Y
L–R
L–W
L–R
L–W
L
L–W
4
1
2
3
+2
+1
B
S
M
W–B
5 E
W–B
A
J 2
Junction
Connector
F 6
Front Wiper Motor
EB
IE

System Outline

With the ignition SW turned on, the current flows to TERMINAL 8 of the front wiper and washer SW, TERMINAL 2 of the front wiper motor through the WIPER fuse, and the current flows to TERMINAL 2 of the washer motor through the WASHER fuse.

1. Low Speed Position

With the front wiper SW turned to LO position, the current flows from TERMINAL 8 of the front wiper and washer SW to TERMINAL 7 to TERMINAL 1 of the front wiper motor to TERMINAL 5 to GROUND and causes to the front wiper motor to run at low speed.

2. High Speed Position

With the front wiper SW turned to HI position, the current flows from TERMINAL 8 of the front wiper and washer SW to TERMINAL 9 to TERMINAL 4 of the front wiper motor to TERMINAL 5 to GROUND and causes to the wiper motor to run at high speed.

3. INT Position

With the front wiper SW turned to INT position, the wiper relay operates and the current which is connected by relay function flows from TERMINAL 8 of the front wiper and washer SW to TERMINAL 5 to GROUND. This flow of current operates the intermittent circuit and the current flows from TERMINAL 8 of the front wiper and washer SW to TERMINAL 7 to TERMINAL 1 of the front wiper motor to TERMINAL 5 to GROUND and the functions.
The intermittent operation is controlled by the charge/discharge function of the condenser installed in the relay, and the intermittent time is controlled by a time control SW (w/ intermittent volume SW) to change the charging time of the condenser.

4. MIST Position

With the front wiper SW turned to MIST position, the current flows from TERMINAL 8 of the front wiper and washer SW to TERMINAL 7 to TERMINAL 1 of the front wiper motor to TERMINAL 5 to GROUND and causes to the front wiper motor to run at low speed.

5. Washer Continuous Operation

With the front washer SW turned to on, the current flows from TERMINAL 2 of the front washer motor to TERMINAL 1 to TERMINAL 4 of the front wiper and washer SW to TERMINAL 5 to GROUND and causes to the washer motor to run, and the window washer jet operates. This causes the current to flow to washer continuous operation circuit in TERMINAL 8 of the front wiper and washer SW to TERMINAL 7 to TERMINAL 1 of the front wiper motor to TERMINAL 5 to GROUND and the washer operates continuously.

○ : Parts Location

Code	See Page	Code	See Page	Code	See Page
C14	38	F6	34 (2ZZ–GE)	J1	37 (1ZZ–FE)
F5	34 (2ZZ–GE)		36 (1ZZ–FE)	J2	39
	36 (1ZZ–FE)	J1	35 (2ZZ–GE)		

: Junction Block and Wire Harness Connector

Code	See Page	Junction Block and Wire Harness (Connector Location)
IC	25	Engine Room Main Wire and Instrument Panel J/B (Lower Finish Panel)
IL	24	Instrument Panel Wire and Instrument Panel J/B (Lower Finish Panel)

: Connector Joining Wire Harness and Wire Harness

Code	See Page	Joining Wire Harness and Wire Harness (Connector Location)
IA2	44	Engine Room Main Wire and Instrument Panel Wire (Instrument Panel Reinforcement LH)

▽ : Ground Points

Code	See Page	Ground Points Location
EB	42 (2ZZ–GE)	Front Left Suspension Tower
	43 (1ZZ–FE)	
IE	44	Behind Combination Meter

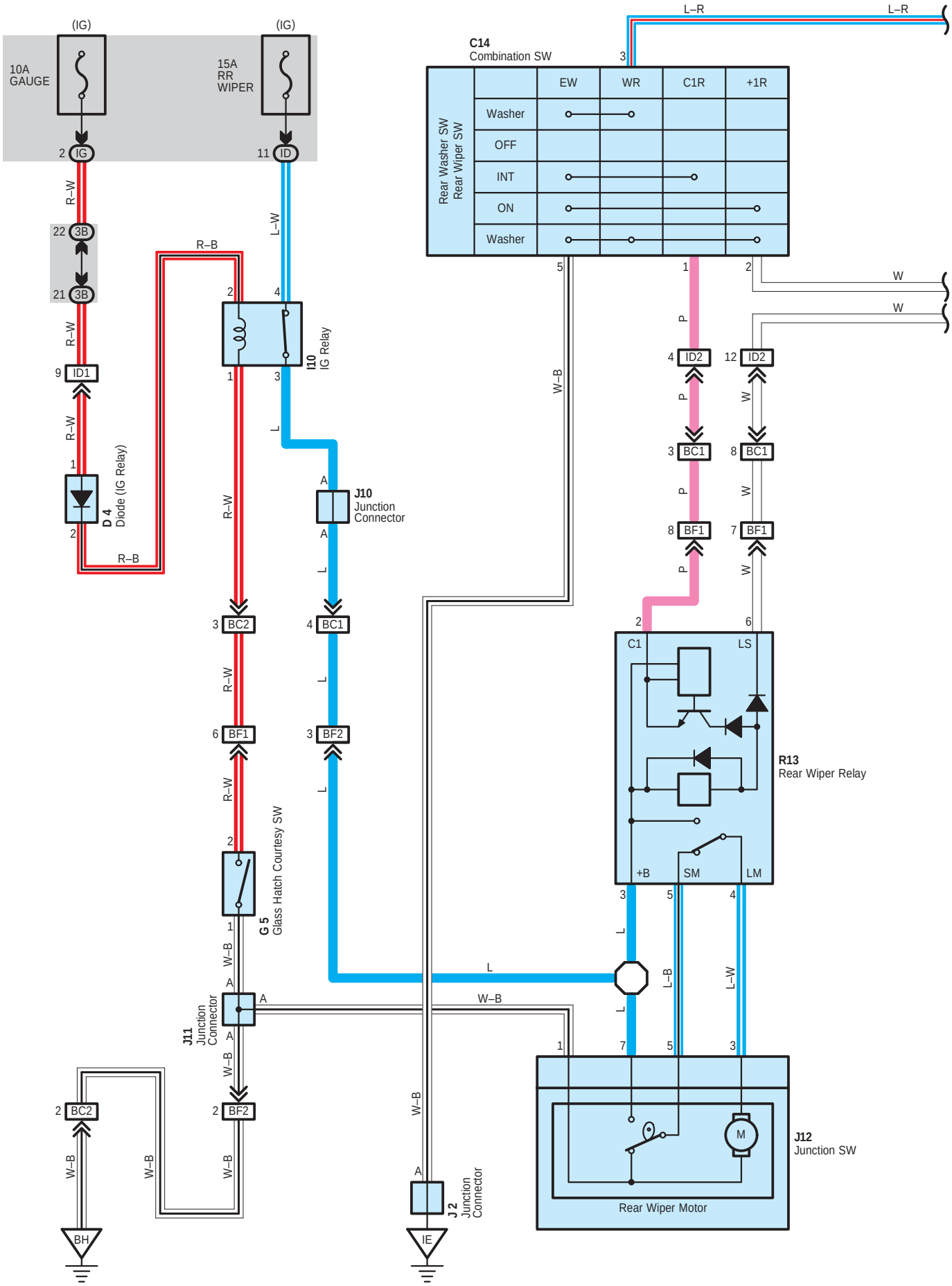
(IG)
10A
GAUGE
(IG)
15A
RR
WIPER
2 IG
11 ID
R–W
22 3B
21 3B
R–W
9 ID1
R–W
1
D 4
Diode (IG Relay)
2
R–B
R–B
L–W
2
4
1
3
I10
IG Relay
L
A
J10
Junction
Connector
A
L
3 BC2
4 BC1
R–W
L
6 BF1
3 BF2
R–W
L
2
1
G 5
Glass Hatch Courtesy SW
W–B
A
A
J11
Junction
Connector
A
W–B
2 BC2
2 BF2
W–B
W–B
W–B
BH
W–B
A
J 2
Junction
Connector
IE
C14
Combination SW
L–R
L–R
3
EW
WR
C1R
+1R
Rear Washer SW
Rear Wiper SW
Washer
OFF
INT
ON
Washer
5
1
2
W
W
W–B
P
4 ID2
12 ID2
P
W
3 BC1
8 BC1
P
W
8 BF1
7 BF1
P
W
2
6
C1
LS
R13
Rear Wiper Relay
+B
SM
LM
3
5
4
L
L
L–B
L–W
L
W–B
1
7
5
3
M
J12
Junction SW
Rear Wiper Motor

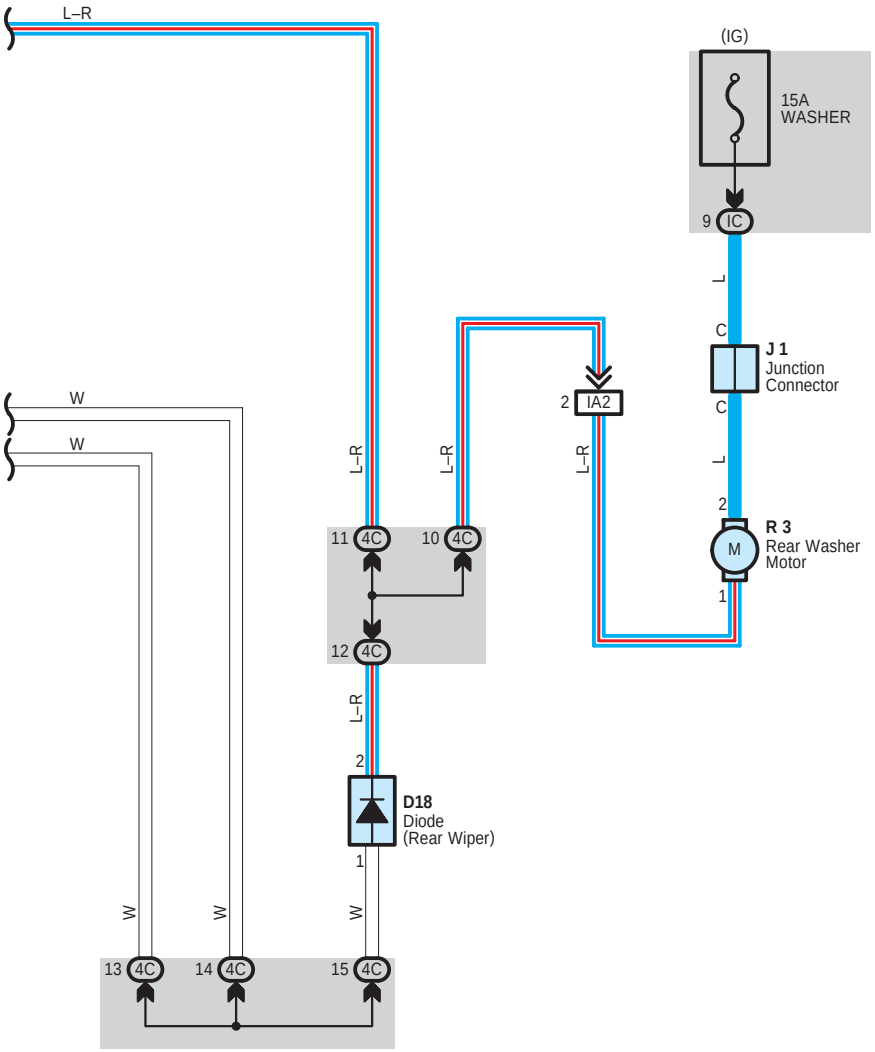
L–R
(IG)
15A
WASHER
9 IC
L
C
J 1
Junction
Connector
C
L
2
R 3
Rear Washer
Motor
M
1
W
W
L–R
L–R
L–R
2 IA2
11 4C
10 4C
12 4C
L–R
2
D18
Diode
(Rear Wiper)
1
W
W
W
13 4C
14 4C
15 4C

System Outline

When the ignition SW is turned on and glass hatch is closed, the current flows through the WASHER fuse to TERMINAL 2 of the rear washer motor, the current flows through the RR WIPER fuse to IG relay (Point side) to TERMINAL 7 of the junction SW and TERMINAL 3 of the rear wiper relay.

1. Rear Wiper Normal Operation

When the ignition SW is turned on, glass hatch is closed and rear wiper SW turned to ON position, the current flows through the TERMINAL 3 of the rear wiper relay to TERMINAL 6 to TERMINAL 2 of the rear wiper SW to TERMINAL 5 to GROUND. As a result, the rear wiper relay is operated, and the current flows through the TERMINAL 3 of the rear wiper relay to TERMINAL 4 to TERMINAL 3 of the junction SW to rear wiper motor to TERMINAL 1 of the junction SW to GROUND, causing the motor to operate the rear wiper.

2. Rear Wiper Intermittent Operation

When the ignition SW is turned on, glass hatch is closed and rear wiper SW turned to INT position, the current flows through the TERMINAL 3 of the rear wiper relay to TERMINAL 2 to TERMINAL 1 of the rear wiper SW to TERMINAL 5 to GROUND. As a result, the intermittent circuit of the relay operates and the rear wiper motor operates.

3. Washer Operation

With the ignition SW is turned on, glass hatch is closed and rear washer SW turned to ON and washer position, when the rear wiper SW is turned further, the current flows through the WASHER fuse to TERMINAL 2 of the rear washer motor to TERMINAL 1 to TERMINAL 3 of the rear washer SW to TERMINAL 5 to GROUND, so that the rear washer motor rotates and the window washer emits a water, only while the switch is fully turned.
With the ignition SW turned on and the rear wiper and washer SW turned to OFF position, when the washer is turned ON (to Wiper OFF side), current flows as above so that the rear washer motor rotates and the window washer emits water as well as the wiper operates.

: Parts Location

Code	See Page	Code	See Page	Code	See Page
C14	38	J1	35 (2ZZ–GE)	J12	40
D4	38		37 (1ZZ–FE)	R3	35 (2ZZ–GE)
D18	38	J2	39		37 (1ZZ–FE)
G5	40	J10	40	R13	41
I10	39	J11	40		

: Junction Block and Wire Harness Connector

Code	See Page	Junction Block and Wire Harness (Connector Location)
IC	25	Engine Room Main Wire and Instrument Panel J/B (Lower Finish Panel)
ID	25	Floor Wire and Instrument Panel J/B (Lower Finish Panel)
IG	25	Instrument Panel Wire and Instrument Panel J/B (Lower Finish Panel)
3B	29	Instrument Panel Wire and RH J/B (Right Side of the Instrument Panel Reinforcement)
4C	32	Instrument Panel Wire and Center J/B (Behind the Combination Meter)

: Connector Joining Wire Harness and Wire Harness

Code	See Page	Joining Wire Harness and Wire Harness (Connector Location)
IA2	44	Engine Room Main Wire and Instrument Panel Wire (Instrument Panel Reinforcement LH)
ID1	44	Instrument Panel Wire and Floor Wire (Left Kick Panel)
ID2		
BC1	46	Back Door No.1 Wire and Floor Wire (Left Quarter Panel)
BC2		
BF1	46	Back Door No.1 Wire and Back Door No.2 Wire (Back Panel LH)
BF2		

: Ground Points

Code	See Page	Ground Points Location
IE	44	Behind Combination Meter
BH	46	Left Quarter Panel

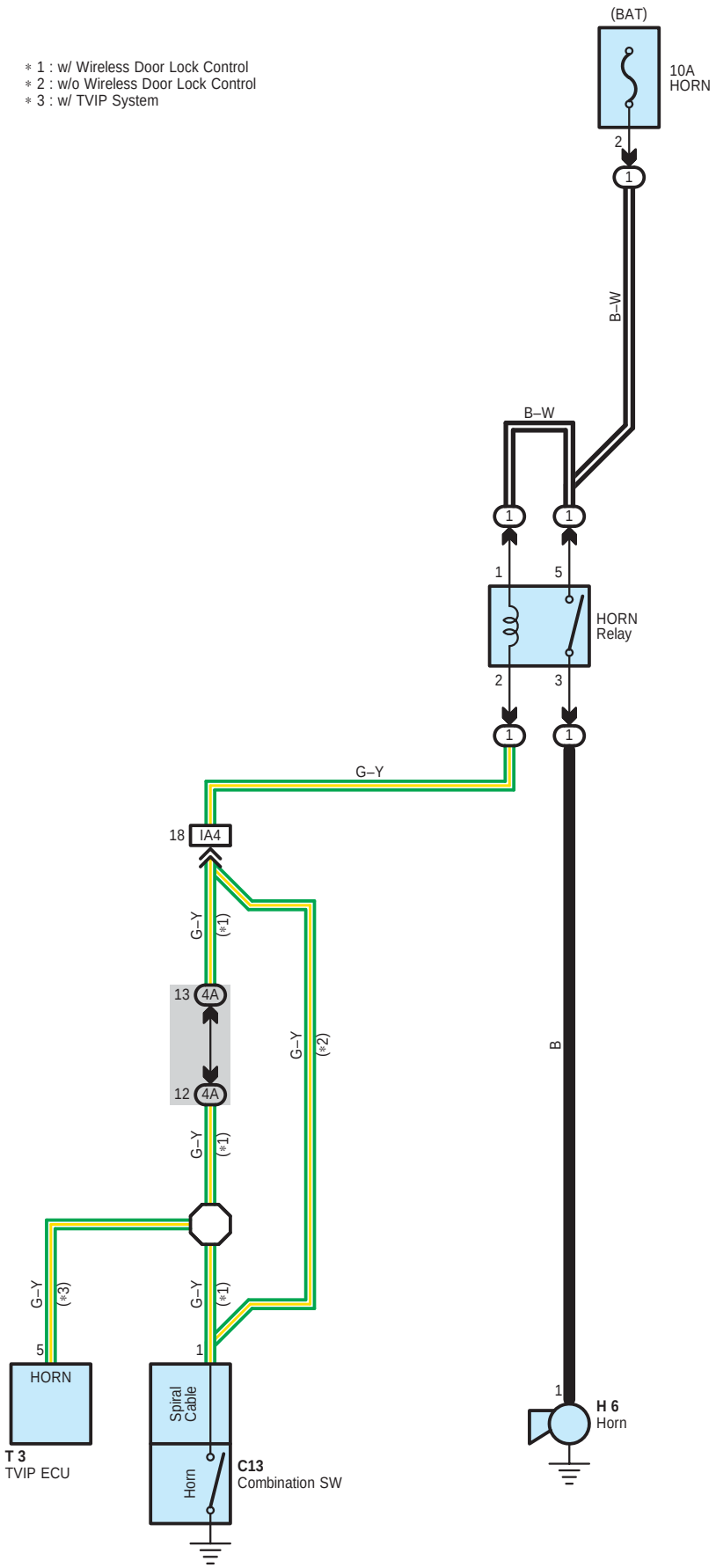
* 1 : w/ Wireless Door Lock Control
* 2 : w/o Wireless Door Lock Control
* 3 : w/ TVIP System
(BAT)
10A
HORN
2
1
B–W
B–W
1
1
1
5
HORN
Relay
2
3
1
1
G–Y
18
IA4
G–Y
(*1)
13
4A
12
4A
G–Y
(*2)
B
G–Y
(*1)
G–Y
(*3)
G–Y
(*1)
5
1
HORN
T 3
TVIP ECU
Spiral
Cable
Horn
C13
Combination SW
1
H 6
Horn

: Parts Location

Code	See Page	Code	See Page	Code	See Page
C13	38	H6	36 (1ZZ–FE)		
H6	34 (2ZZ–GE)	T3	39		

: Relay Blocks

Code	See Page	Relay Blocks (Relay Block Location)
1	23	Engine Room R/B (Engine Compartment Left)

: Junction Block and Wire Harness Connector

Code	See Page	Junction Block and Wire Harness (Connector Location)
4A	32	Instrument Panel Wire and Center J/B (Behind the Combination Meter)

: Connector Joining Wire Harness and Wire Harness

Code	See Page	Joining Wire Harness and Wire Harness (Connector Location)
IA4	44	Engine Room Main Wire and Instrument Panel Wire (Instrument Panel Reinforcement LH)

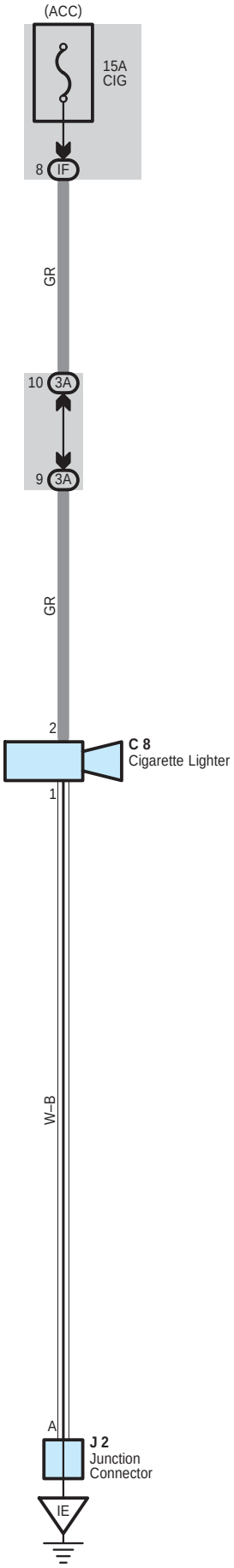
(ACC)
15A
CIG
8
IF
GR
10
3A
9
3A
GR
2
C 8
Cigarette Lighter
1
W–B
A
J 2
Junction
Connector
IE

○ : **Parts Location**

Code	See Page	Code	See Page	Code	See Page
C8	38	J2	39		

: **Junction Block and Wire Harness Connector**

Code	See Page	Junction Block and Wire Harness (Connector Location)
IF	25	Instrument Panel Wire and Instrument Panel J/B (Lower Finish Panel)
3A	29	Instrument Panel Wire and RH J/B (Right Side of the Instrument Panel Reinforcement)

▽ : **Ground Points**

Code	See Page	Ground Points Location
IE	44	Behind Combination Meter

Power Outlet for 12V

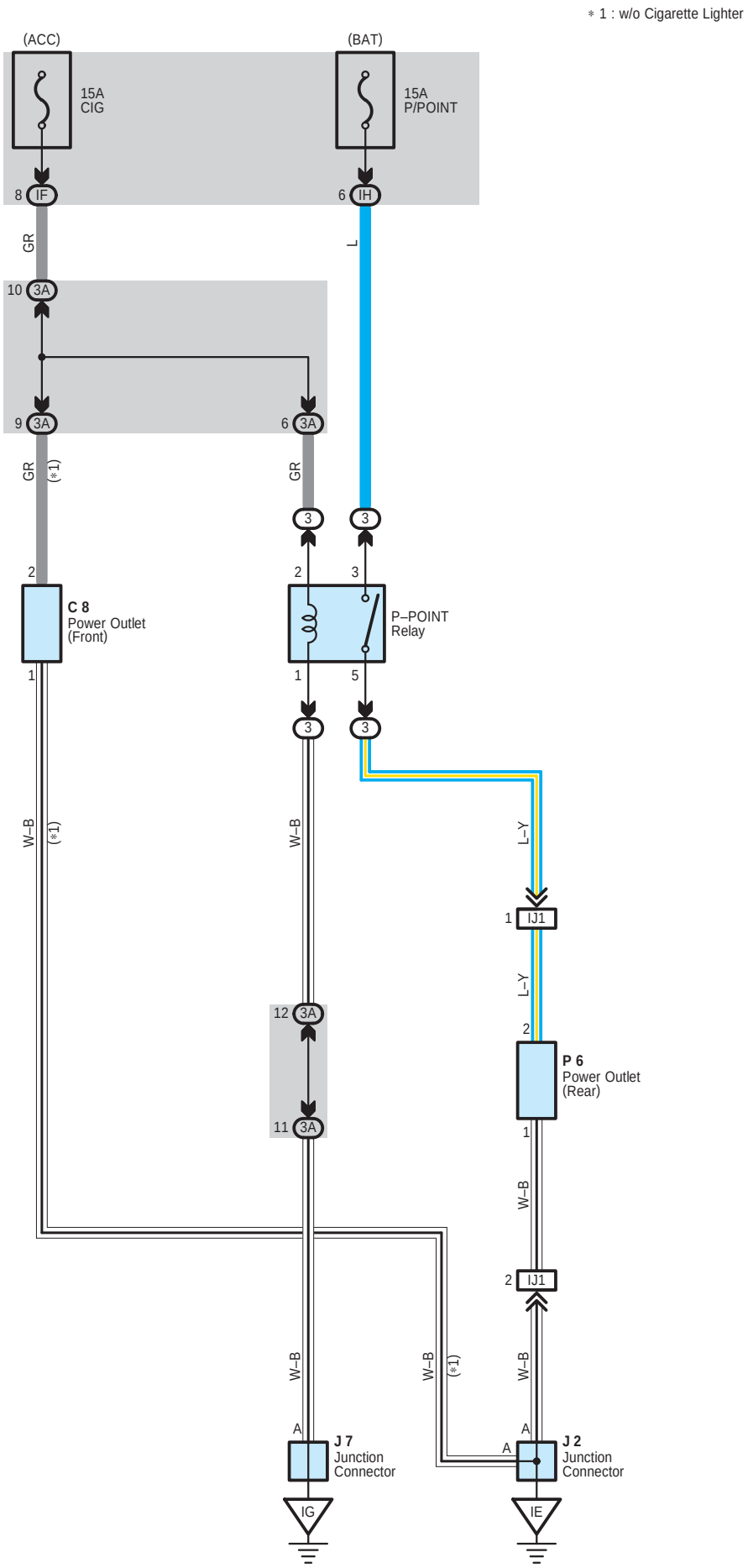

: Parts Location

Code	See Page	Code	See Page	Code	See Page
C8	38	J7	39		
J2	39	P6	39		

: Relay Blocks

Code	See Page	Relay Blocks (Relay Block Location)
3	28	RH R/B (Right Side of the Instrument Panel Reinforcement)

: Junction Block and Wire Harness Connector

Code	See Page	Junction Block and Wire Harness (Connector Location)
IF	25	Instrument Panel Wire and Instrument Panel J/B (Lower Finish Panel)
IH		
3A	29	Instrument Panel Wire and RH J/B (Right Side of the Instrument Panel Reinforcement)

: Connector Joining Wire Harness and Wire Harness

Code	See Page	Joining Wire Harness and Wire Harness (Connector Location)
IJ1	45	Console Wire and Instrument Panel Wire (Front Side of the Parking Brake Lever)

: Ground Points

Code	See Page	Ground Points Location
IE	44	Behind Combination Meter
IG	44	Right Kick Panel

Power Outlet for 115V

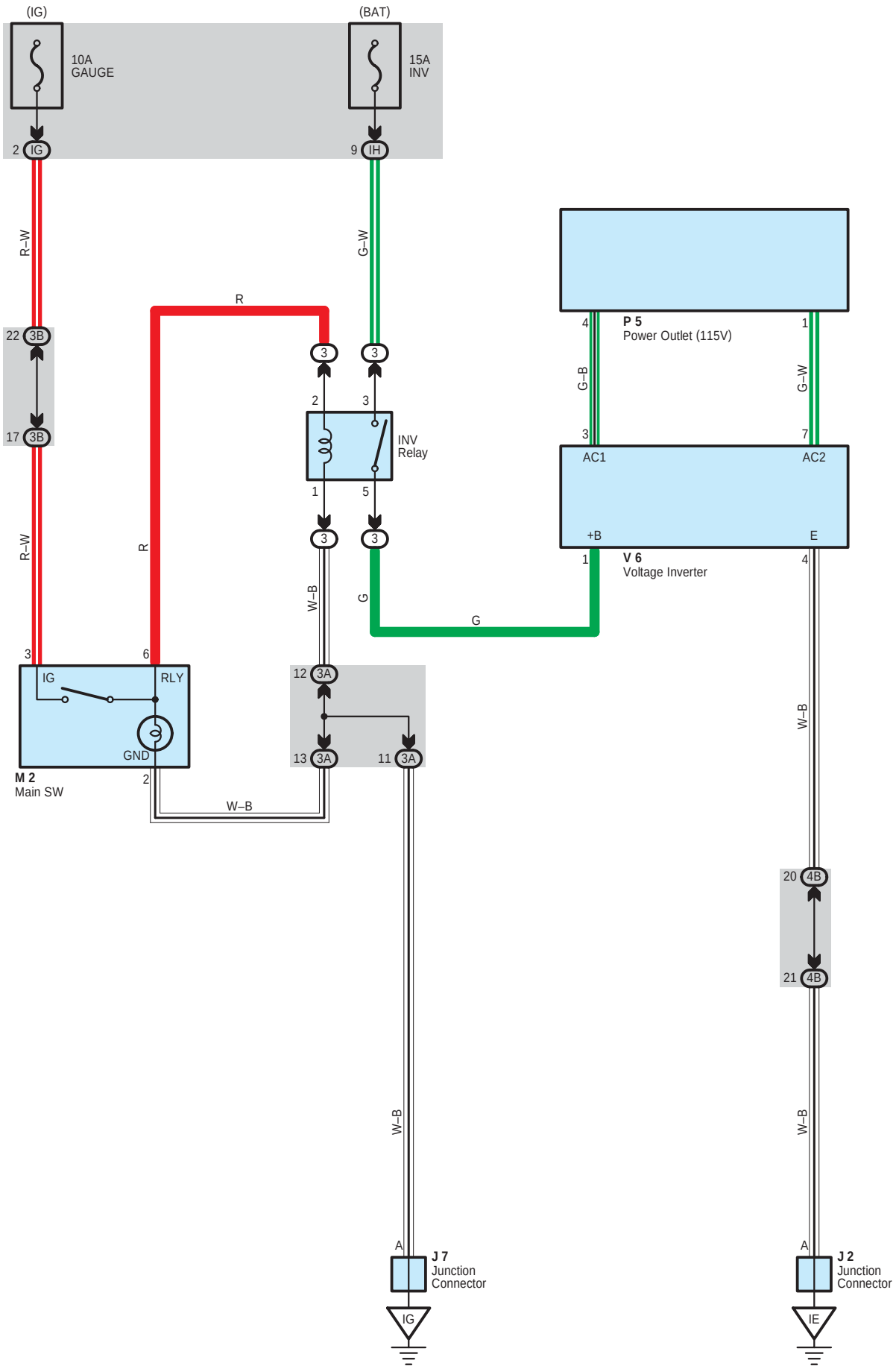

: Parts Location

Code	See Page	Code	See Page	Code	See Page
J2	39	M2	39	V6	39
J7	39	P5	39		

: Relay Blocks

Code	See Page	Relay Blocks (Relay Block Location)
3	28	RH R/B (Right Side of the Instrument Panel Reinforcement)

: Junction Block and Wire Harness Connector

Code	See Page	Junction Block and Wire Harness (Connector Location)
IG	25	Instrument Panel Wire and Instrument Panel J/B (Lower Finish Panel)
IH		
3A	29	Instrument Panel Wire and RH J/B (Right Side of the Instrument Panel Reinforcement)
3B		
4B	32	Instrument Panel Wire and Center J/B (Behind the Combination Meter)

: Ground Points

Code	See Page	Ground Points Location
IE	44	Behind Combination Meter
IG	44	Right Kick Panel

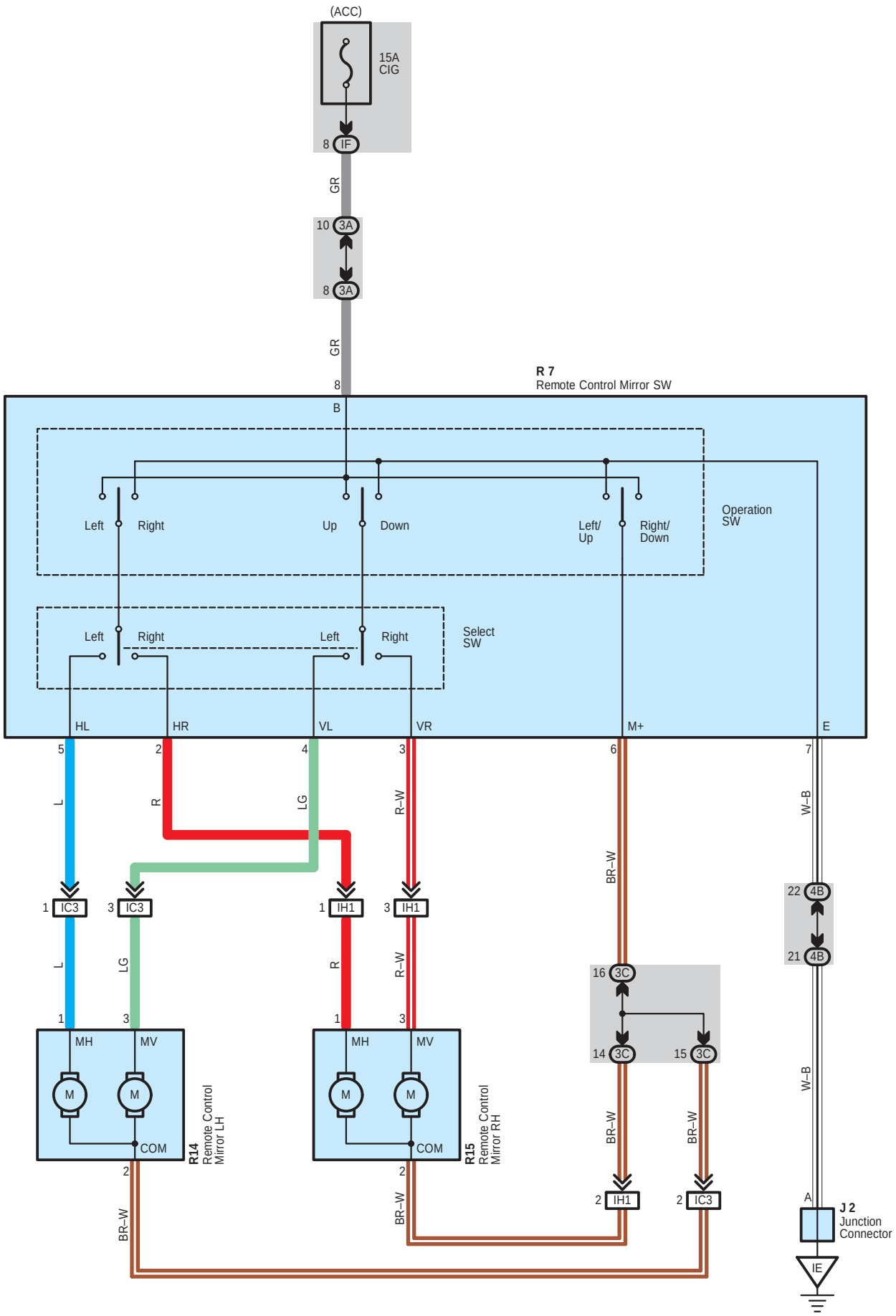
(ACC)
15A
CIG
8 IF
GR
10 3A
8 3A
GR
8
R 7
Remote Control Mirror SW
B
Left
Right
Up
Down
Left/
Up
Right/
Down
Operation
SW
Left
Right
Left
Right
Select
SW
HL
HR
VL
VR
M+
E
5
2
4
3
6
7
L
R
LG
R–W
BR–W
W–B
1 IC3
3 IC3
1 IH1
3 IH1
22 4B
21 4B
L
LG
R
R–W
16 3C
1
3
1
3
MH
MV
MH
MV
M
M
M
M
COM
COM
R14
Remote Control
Mirror LH
R15
Remote Control
Mirror RH
14 3C
15 3C
W–B
BR–W
BR–W
2
2
BR–W
BR–W
2 IH1
2 IC3
A
J 2
Junction
Connector
IE

○ : **Parts Location**

Code	See Page	Code	See Page	Code	See Page
J2	39	R14	41		
R7	39	R15	41		

: **Junction Block and Wire Harness Connector**

Code	See Page	Junction Block and Wire Harness (Connector Location)
IF	25	Instrument Panel Wire and Instrument Panel J/B (Lower Finish Panel)
3A	29	Instrument Panel Wire and RH J/B (Right Side of the Instrument Panel Reinforcement)
3C		
4B	32	Instrument Panel Wire and Center J/B (Behind the Combination Meter)

: **Connector Joining Wire Harness and Wire Harness**

Code	See Page	Joining Wire Harness and Wire Harness (Connector Location)
IC3	44	Front Door LH Wire and Instrument Panel Wire (Left Kick Panel)
IH1	45	Front Door RH Wire and Instrument Panel Wire (Right Kick Panel)

▽ : **Ground Points**

Code	See Page	Ground Points Location
IE	44	Behind Combination Meter

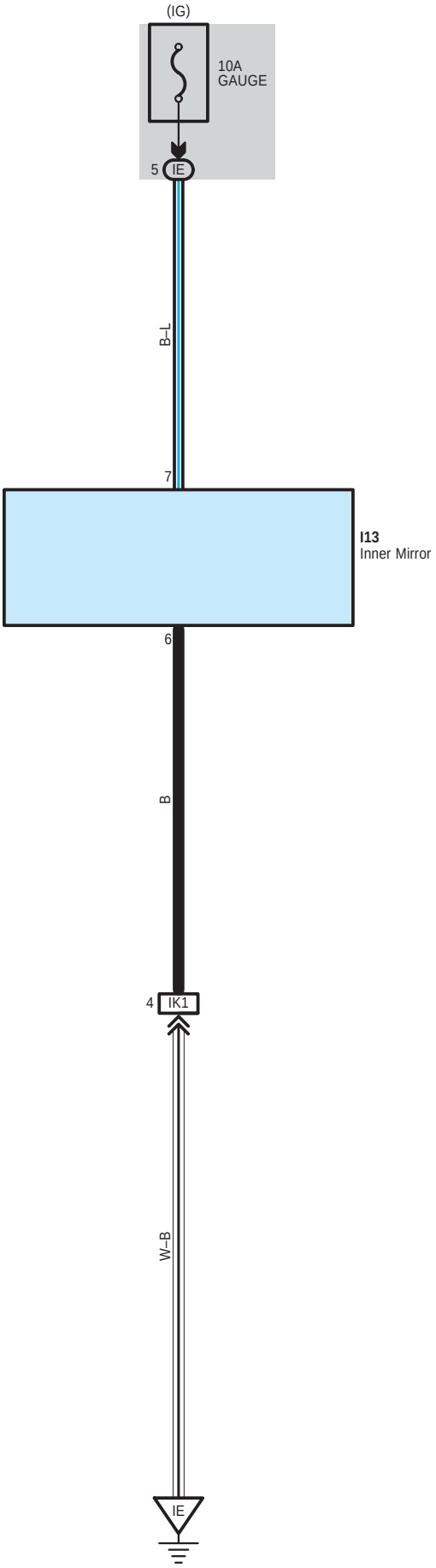
(IG)
10A
GAUGE
5
IE
B–L
7
I13
Inner Mirror
6
B
4
IK1
W–B
IE

○ : **Parts Location**

Code	See Page	Code	See Page	Code	See Page
I13	40				

: **Junction Block and Wire Harness Connector**

Code	See Page	Junction Block and Wire Harness (Connector Location)
IE	25	Roof Wire and Instrument Panel J/B (Lower Finish Panel)

: **Connector Joining Wire Harness and Wire Harness**

Code	See Page	Joining Wire Harness and Wire Harness (Connector Location)
IK1	45	Roof Wire and Instrument Panel Wire (Instrument Panel Reinforcement LH)

: **Ground Points**

Code	See Page	Ground Points Location
IE	44	Behind Combination Meter

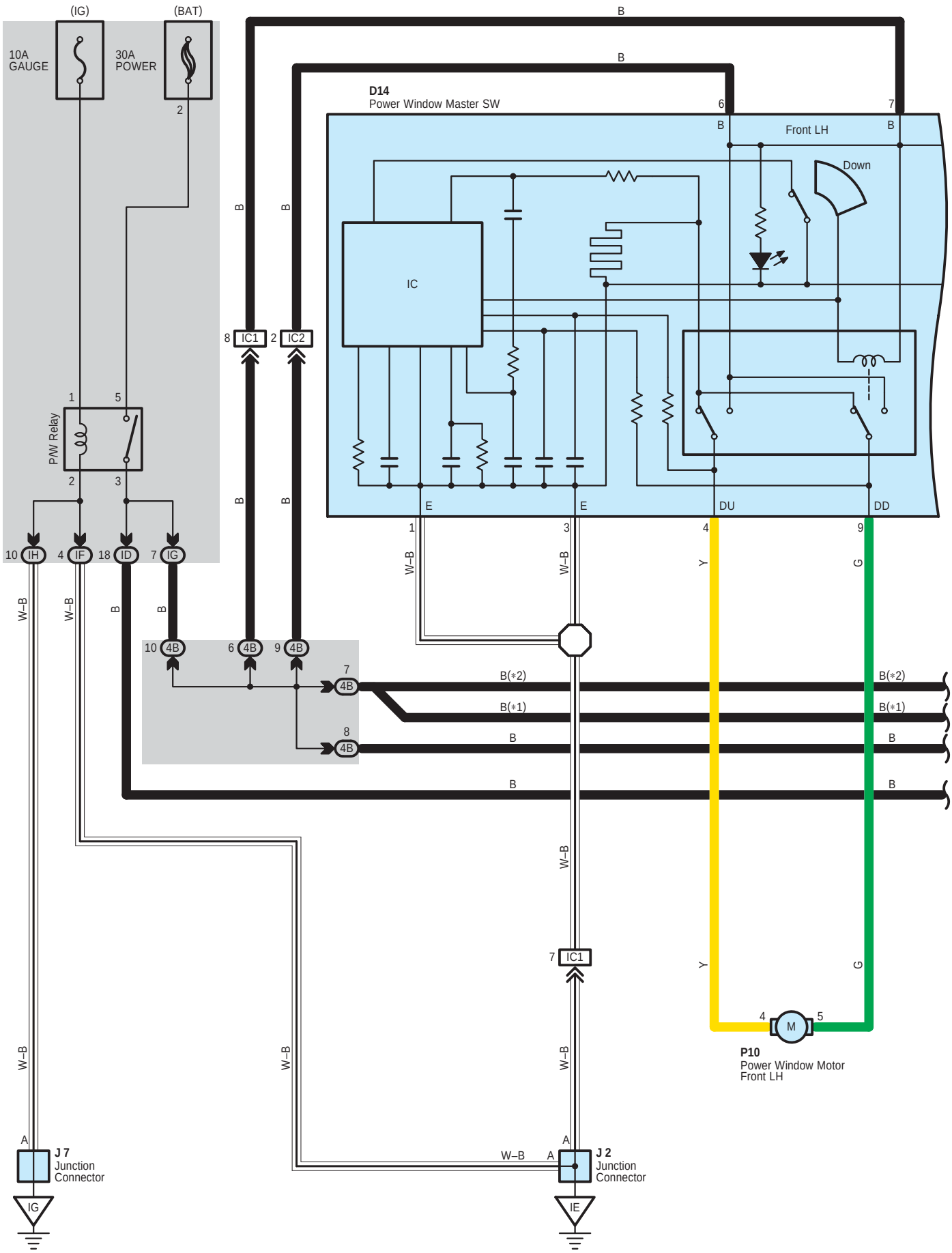
(IG)
(BAT)
10A
GAUGE
30A
POWER
2
B
B
D14
Power Window Master SW
6
7
B
B
Front LH
Down
IC
8
IC1
2
IC2
1
5
P/W Relay
2
3
E
E
DU
DD
1
3
4
9
10
IH
4
IF
18
ID
7
IG
W–B
W–B
Y
G
B
B
10
4B
6
4B
9
4B
7
4B
8
4B
B(∗2)
B(∗1)
B
B
B
B
W–B
7
IC1
Y
G
4
M
5
P10
Power Window Motor
Front LH
W–B
W–B
W–B
A
J 7
Junction
Connector
IG
W–B
A
A
J 2
Junction
Connector
IE

∗ 1 : Separate Type Amplifier
∗ 2 : Built–In Type Amplifier

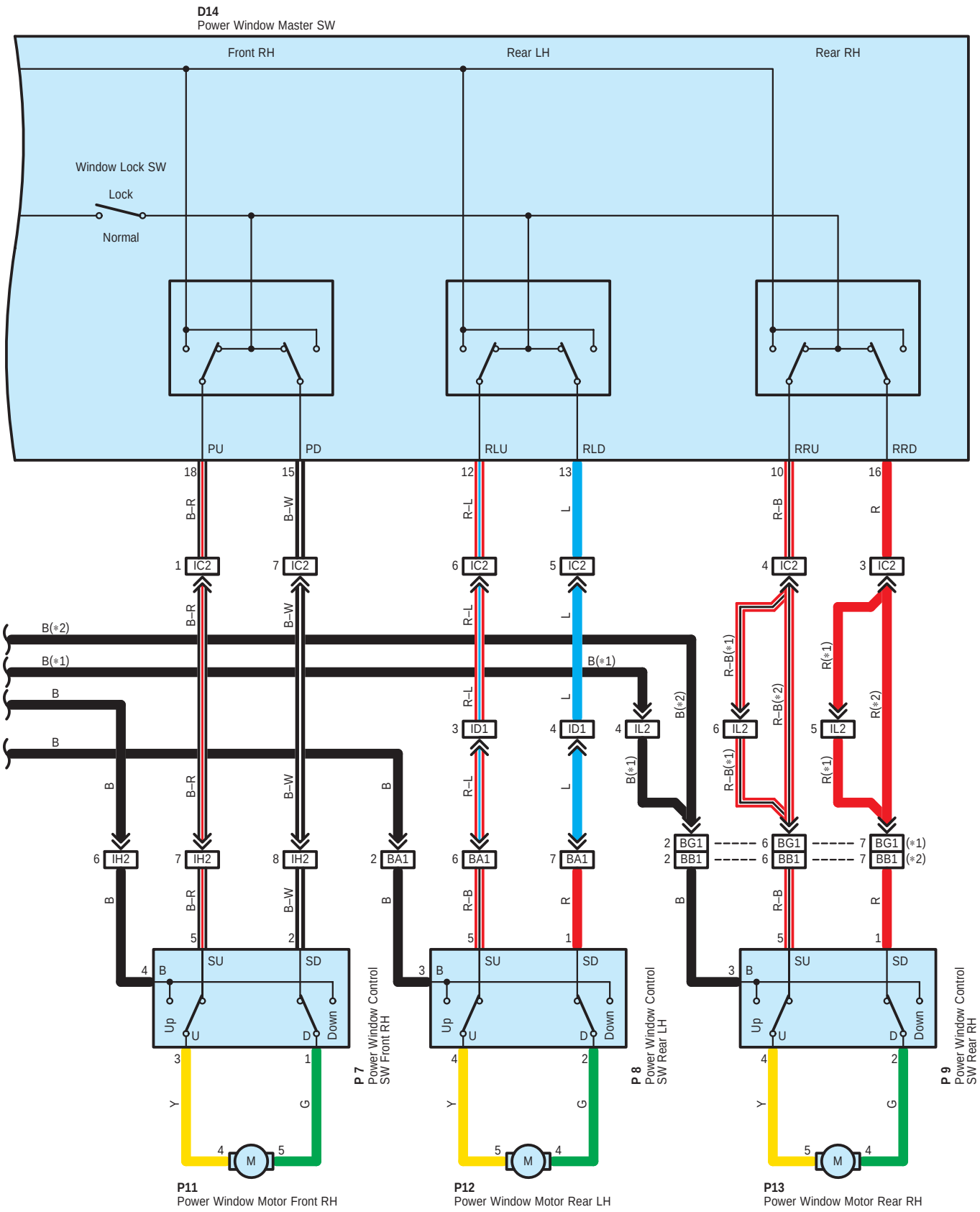

System Outline

When the ignition SW is turned on, the current flows through the GAUGE fuse to TERMINAL 1 of the P/W relay to TERMINAL 2 to GROUND. This activates the relay and the current flows through the POWER fuse to TERMINAL 5 of the relay to TERMINAL 3 to TERMINAL B of the power window master SW, TERMINAL 4 of the power window control SW front RH and TERMINAL 3 of the power window control SW rear LH, RH.

1. Manual Operation (Driver's Window)

With the ignition SW turned on and with the power window master SW (Front LH) in Up position, the current flowing to TERMINAL B of the power window master SW flows to TERMINAL DU of the master SW to TERMINAL 4 of the power window motor to TERMINAL 5 to TERMINAL DD of the master SW to TERMINAL E to GROUND and rotates the power window motor in the up direction. The window ascends only while the SW is being pulled. In down operation, the flows of current from TERMINAL B of the power window master SW to TERMINAL DD to TERMINAL 5 of the motor to TERMINAL 4 to TERMINAL DU of the master SW to TERMINAL E to GROUND, flowing in the opposite direction to manual up operation and rotating the motor in reverse, thus opening the window.

2. Auto Down Operation (Driver's Window)

When the front LH window control SW in the power window master SW is pushed strongly on the down side, current flows from TERMINAL B of the master SW to TERMINAL DD to TERMINAL 5 of the power window motor to TERMINAL 4 to TERMINAL DU of the master SW to TERMINAL E to GROUND. Because the hold circuit inside the master SW keeps the relay on the down side activated, the power window motor continues operating even if the power window master SW is released. When the driver's window is fully opened, the hold circuit turns off and the relay on the down side turns off, and auto down operation is completed.

3. Stopping of Auto Down Operation (Driver's Window)

When the master SW (Front LH) is pulled to the up side during auto down operation, a ground circuit opens in the master SW and current does not flow from TERMINAL DU of the master SW to TERMINAL E, so the motor stops, causing auto down operation to stop. If the master SW is pulled continuously, the motor rotates in the up direction in manual up operation.

4. Manual Operation (Front RH Window)

With the power window control SW (Front RH) pulled to the up side, current flowing from TERMINAL 4 of the power window control SW flows to TERMINAL 3 to TERMINAL 4 of the power window motor to TERMINAL 5 to TERMINAL 1 of the power window control SW to TERMINAL 2 to TERMINAL PD of the master SW to TERMINAL E to GROUND and rotates the power window motor (Front RH) in the up direction. Up operation continues only while the power window control SW is pulled to the up side. When the window descends, the current flowing to the motor flows in the opposite direction, and the motor rotates in reverse. When the window lock SW is pushed to the lock side, the ground circuit to the passenger's window becomes open. As a result, even if Open/Close operation of the passenger's window is attempted, the current from TERMINAL E of the power window master SW is not grounded and the motor does not rotate, so the passenger's window can not be operated and window lock occurs.

5. Manual Operation (Rear LH, Rear RH Window)

With the power window control SW (Rear LH, rear RH) pulled to the up side, current flowing from TERMINAL 3 of the power window control SW flows to TERMINAL 4 to TERMINAL 5 of the power window motor to TERMINAL 4 to TERMINAL 2 of the power window control SW to TERMINAL 1 to TERMINAL RLD, RRD of the master SW to TERMINAL E to GROUND and rotates the power window motor (Rear LH, rear RH) in the up direction. Up operation continues only while the power window control SW is pulled to the up side. When the window descends, the current flowing to the motor flows in the opposite direction, and the motor rotates in reverse. When the window lock SW is pushed to the lock side, the ground circuit to the passenger's window becomes open. As a result, even if Open/Close operation of the passenger's window is attempted, the current from TERMINAL E of the power window master SW is not grounded and the motor does not rotate, so the passenger's window can not be operated and window lock occurs.

○ **: Parts Location**

Code	See Page	Code	See Page	Code	See Page
D14	40	P8	41	P12	41
J2	39	P9	41	P13	41
J7	39	P10	41		
P7	41	P11	41		

: **Junction Block and Wire Harness Connector**

Code	See Page	Junction Block and Wire Harness (Connector Location)
ID	25	Floor Wire and Instrument Panel J/B (Lower Finish Panel)
IF	25	Instrument Panel Wire and Instrument Panel J/B (Lower Finish Panel)
IG		
IH		
4B	32	Instrument Panel Wire and Center J/B (Behind the Combination Meter)

: **Connector Joining Wire Harness and Wire Harness**

Code	See Page	Joining Wire Harness and Wire Harness (Connector Location)
IC1	44	Front Door LH Wire and Instrument Panel Wire (Left Kick Panel)
IC2		
ID1	44	Instrument Panel Wire and Floor Wire (Left Kick Panel)
IH2	45	Front Door RH Wire and Instrument Panel Wire (Right Kick Panel)
IL2	45	Floor Wire and Instrument Panel Wire (Right Kick Panel)
BA1	46	Rear Door LH Wire and Floor Wire (Left Center Pillar)
BB1	46	Rear Door RH Wire and Instrument Panel Wire (Right Center Pillar)
BG1	46	Rear Door RH Wire and Floor Wire (Right Center Pillar)

: **Ground Points**

Code	See Page	Ground Points Location
IE	44	Behind Combination Meter
IG	44	Right Kick Panel

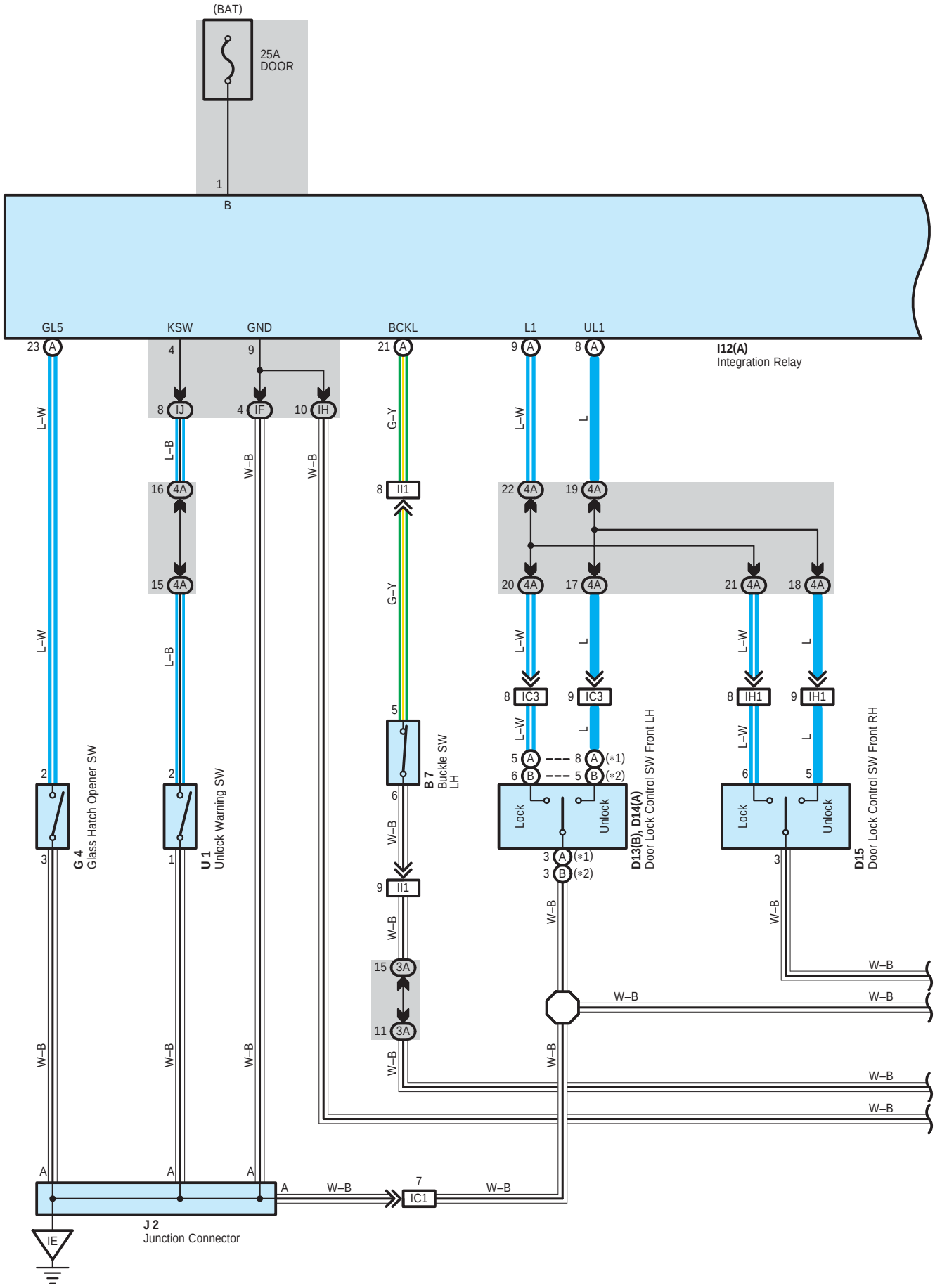
(BAT)
25A
DOOR
1
B
GL5
KSW
GND
BCKL
L1
UL1
I12(A)
Integration Relay
G 4
Glass Hatch Opener SW
U 1
Unlock Warning SW
B 7
Buckle SW
LH
D13(B), D14(A)
Door Lock Control SW Front LH
D15
Door Lock Control SW Front RH
Lock
Unlock
J 2
Junction Connector
IE
IC1
IC3
IH1
IJ
IF
IH
II1
L–W
L–B
G–Y
L
W–B

∗ 1 : w/ Power Window
∗ 2 : w/o Power Window
∗ 3 : Separate Type Amplifier
∗ 4 : Built–In Type Amplifier
∗ 5 : A/T

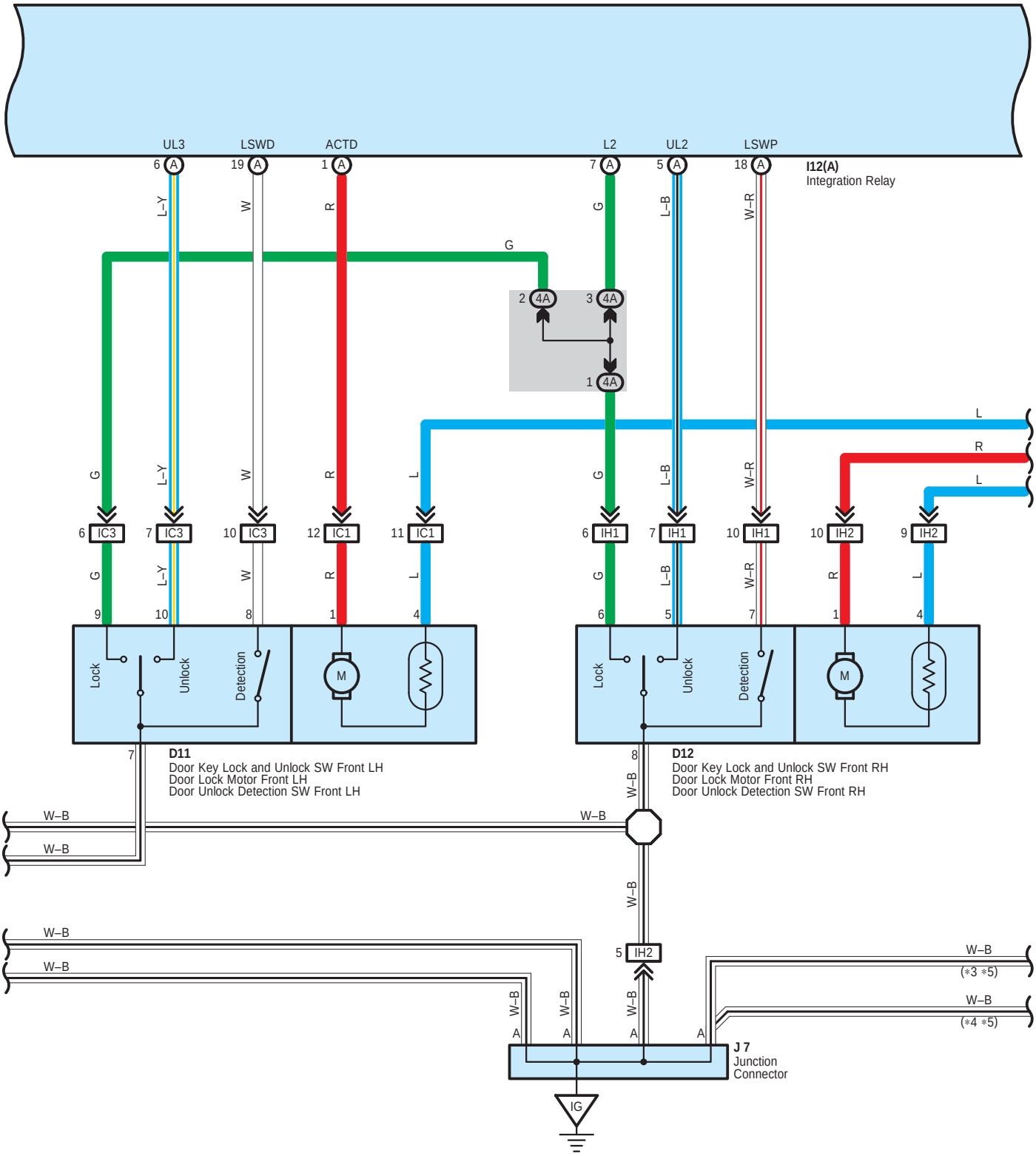

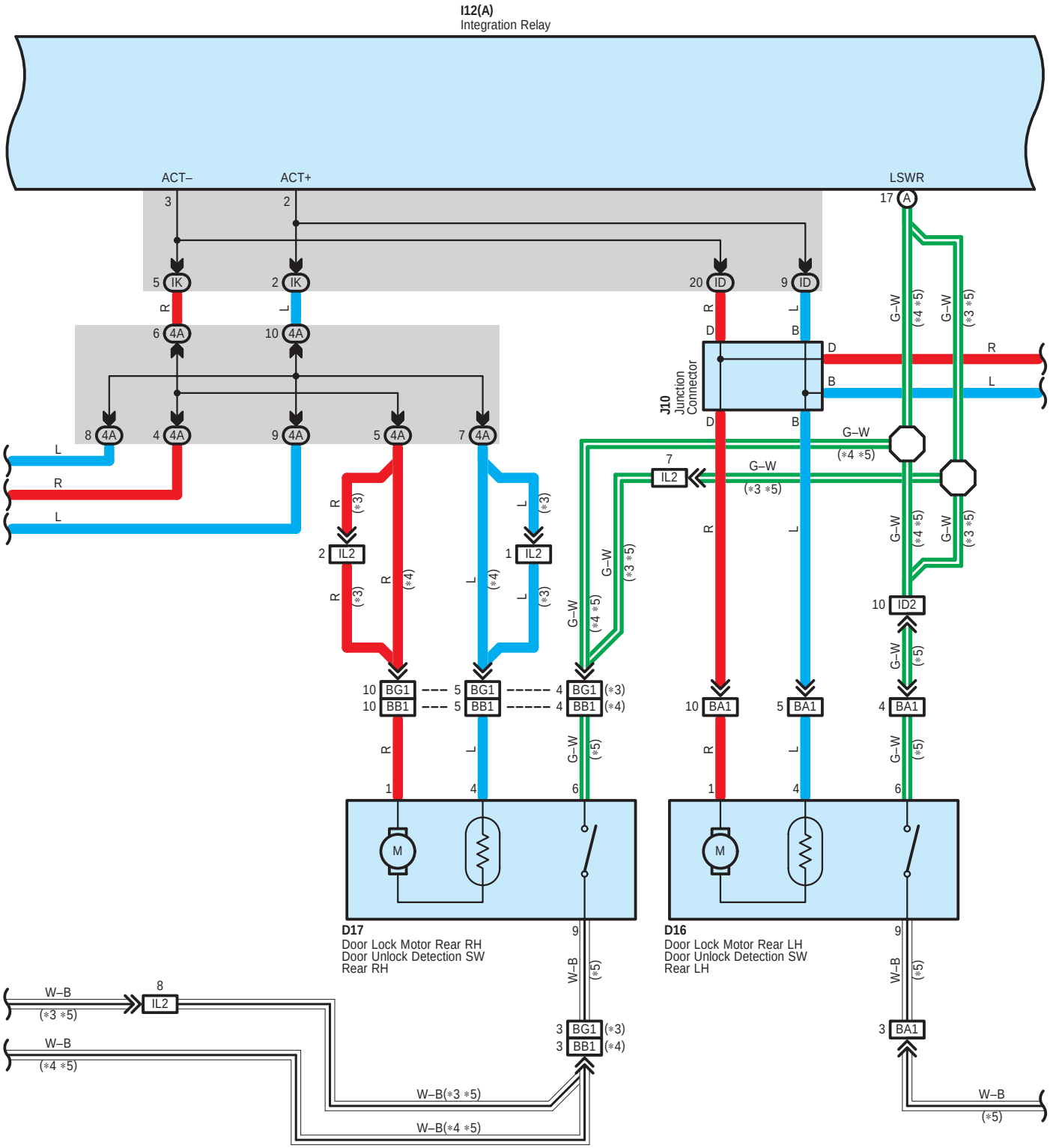
I12(A)
Integration Relay
ACT–
ACT+
LSWR
J10
Junction
Connector
D17
Door Lock Motor Rear RH
Door Unlock Detection SW
Rear RH
D16
Door Lock Motor Rear LH
Door Unlock Detection SW
Rear LH

∗ 3 : Separate Type Amplifier
∗ 4 : Built–In Type Amplifier
∗ 5 : A/T

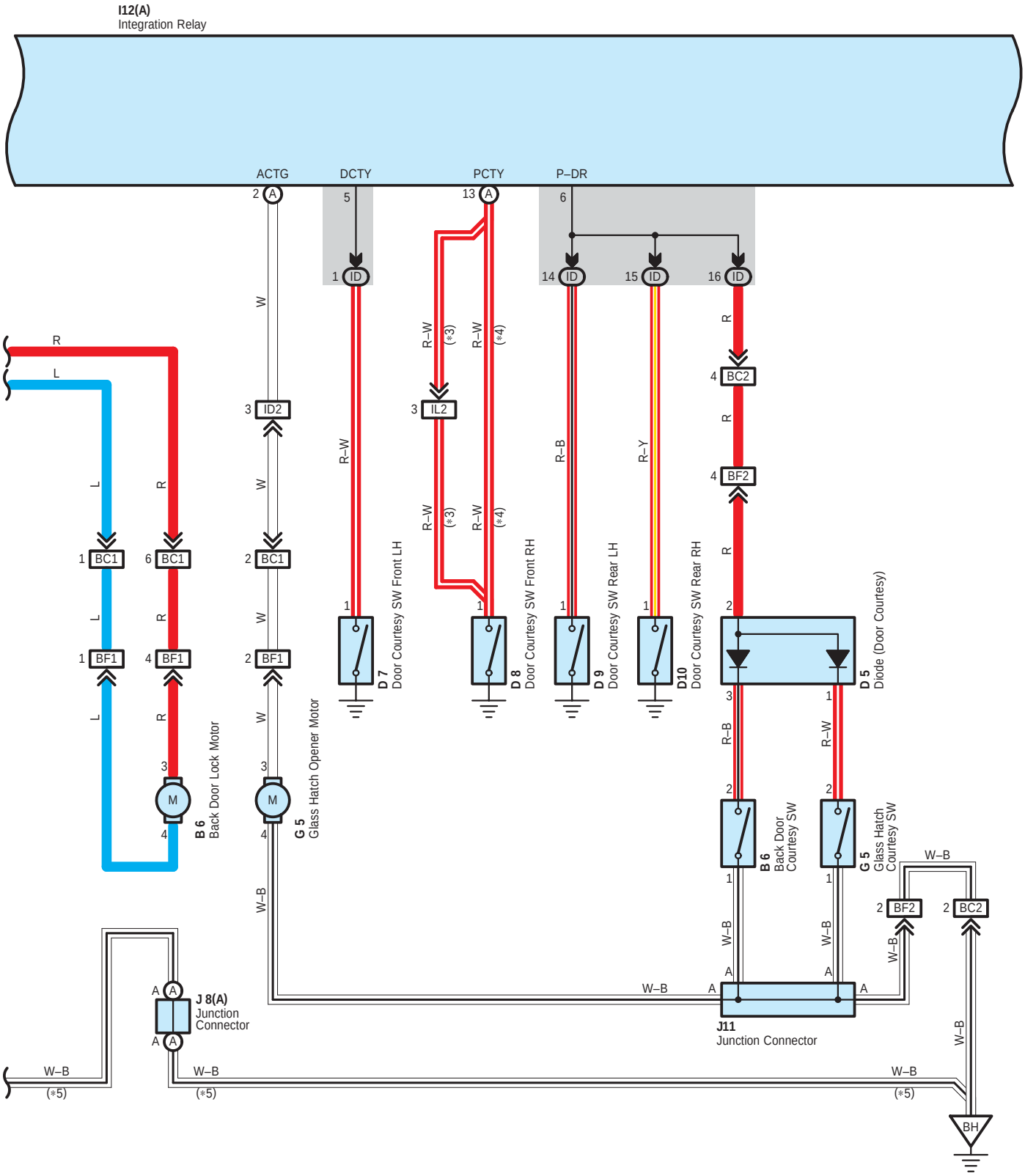

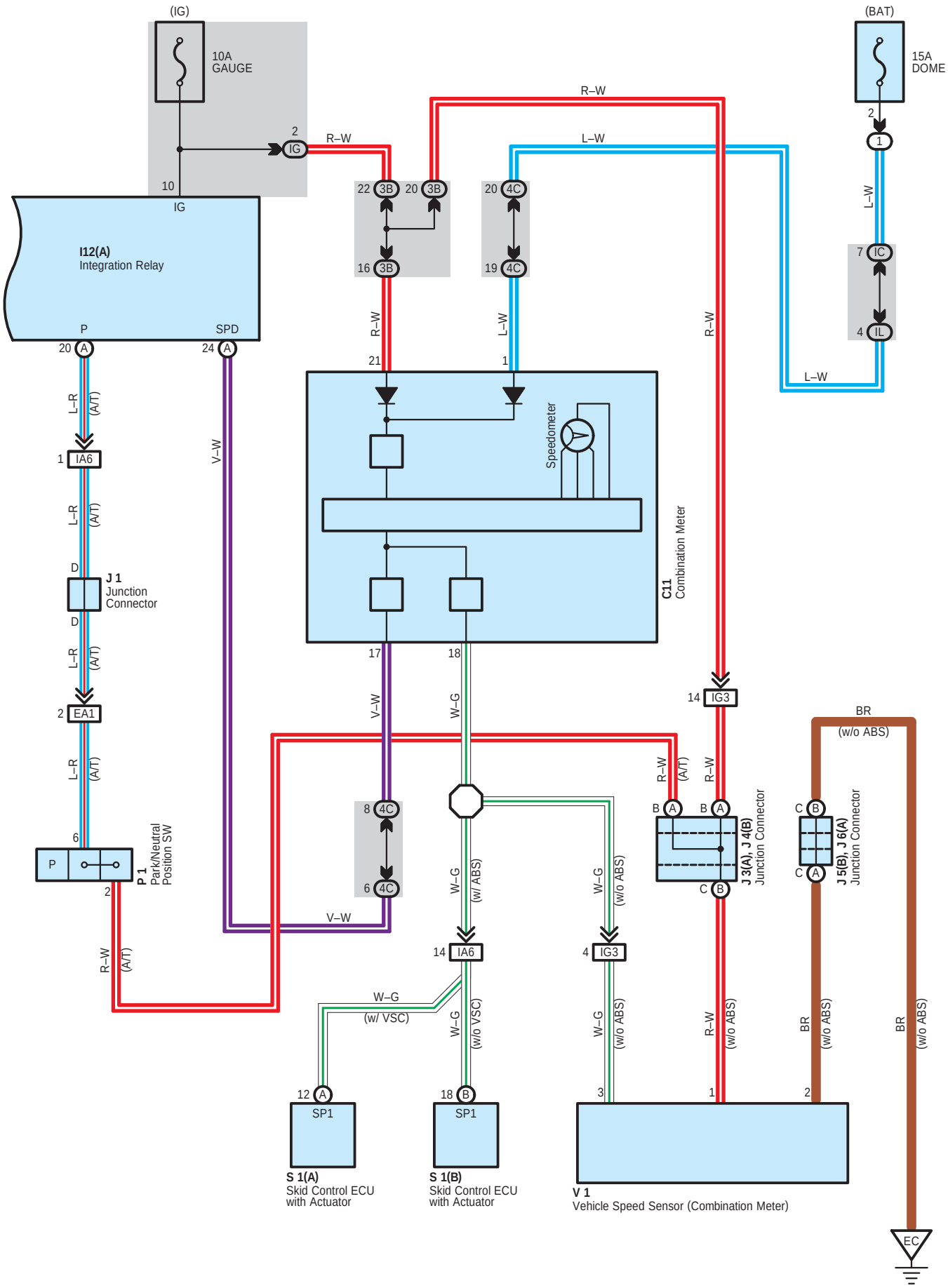
(IG)
10A
GAUGE
(BAT)
15A
DOME
I12(A)
Integration Relay
P
SPD
IG
R–W
L–W
L–R
(A/T)
V–W
W–G
(w/ ABS)
(w/o ABS)
(w/ VSC)
(w/o VSC)
BR
IA6
EA1
IG3
J 1
Junction
Connector
P 1
Park/Neutral
Position SW
Speedometer
C11
Combination Meter
J 3(A), J 4(B)
Junction Connector
J 5(B), J 6(A)
Junction Connector
S 1(A)
Skid Control ECU
with Actuator
S 1(B)
Skid Control ECU
with Actuator
V 1
Vehicle Speed Sensor (Combination Meter)
EC

System Outline

The current always flows to TERMINAL 1 of the integration relay through the DOOR fuse.

1. Manual Lock Operation

When the door lock control SW or door key lock and unlock SW are operated to Lock position, a lock signal is input to TERMINAL (A) 9 or (A) 7 of the integration relay and causes the relay to function. The current flows from TERMINAL 1 of the relay to TERMINAL 2 to the door lock motors to TERMINALS (A) 1 and 3 of the relay to TERMINAL 9 to GROUND and the door lock motors locks the door.

2. Manual Unlock Operation

When the door lock control SW or door key lock and unlock SW are operated to Unlock position, an unlock signal is input to TERMINAL (A) 8, (A) 6 or (A) 5 of the integration relay and causes the relay to function. The current flows from TERMINAL 1 of the relay to TERMINALS (A) 1 and 3 to the door lock motors to TERMINAL 2 of the relay to TERMINAL 9 to GROUND and the door lock motors unlocks the door.

3. Double Operation Unlock Operation

When the door key lock and unlock SW LH is turned to the unlock side, only the driver's door is unlocked. By turning the door key lock and unlock SW LH to the unlock side, a signal is input to TERMINAL (A) 6 of the relay, and if the signal is input again within 3 seconds by turning the SW to the unlock side again, current flows from TERMINAL 3 of the integration relay to the door lock motors to TERMINAL 2 of the relay to TERMINAL 9 to GROUND, causing the door lock motors to operate and unlock the doors.

4. Ignition Key Reminder Operation

∗ Operating door lock knob (Operation of door lock motors)
With the ignition key in the cylinder (Unlock warning SW on), when the door is opened and locked using door lock knob (Door lock motor), the door is locked once but each door is unlocked soon by the function of the relay. As a result, the current flows from TERMINAL 1 of the integration relay to TERMINALS (A) 1 and 3 to the door lock motors to TERMINAL 2 of the relay to TERMINAL 9 to GROUND and unlocks all the doors.

∗ Operating door lock control SW or door key lock and unlock SW
With the ignition key in the cylinder (Unlock warning SW on), when the door is opened and locked using door lock control SW or key SW, the door is locked once but each door is unlocked by the function of SW contained in motors, and the signal is input to TERMINAL (A) 19 of the relay. According to this input signal, the current flows from TERMINAL 1 of the relay to TERMINALS (A) 1 and 3 to the door lock motors to TERMINAL 2 of the relay to TERMINAL 9 to GROUND and unlocks all the doors.

∗ In case of key less lock
With the ignition the key in the cylinder (Unlock warning SW on), when the unlock function is disturbed for example pushing the door lock knob etc., the door holds on lock condition. After closing the door, door courtesy SW inputs the signal into TERMINAL 5 or 6 or (A) 13 of the integration relay. By this input signal, the relay works and current flows from TERMINAL 1 of the relay to TERMINALS (A) 1 and 3 to the door lock motors to TERMINAL 2 of the relay to TERMINAL 9 to GROUND and unlocks all the doors.

5. Glass Hatch Open Operation

When the glass hatch opener SW on, the ignition SW at OFF position or the ignition SW at ON position and the vehicle speed is less than approx. 16 km/h (9.6 mph), the glass hatch is opened.

○ **: Parts Location**

Code		See Page	Code		See Page	Code		See Page
B6		40	D15		40	J6	A	39
B7		40	D16		40	J7		39
C11		38	D17		40	J8	A	40
D5		40	G4		39	J10		40
D7		40	G5		40	J11		40
D8		40	I12	A	39	P1		37 (1ZZ–FE)
D9		40	J1		35 (2ZZ–GE)	S1	A	37 (1ZZ–FE)
D10		40			37 (1ZZ–FE)		B	35 (2ZZ–GE)
D11		40	J2		39			37 (1ZZ–FE)
D12		40	J3	A	39	U1		39
D13	B	40	J4	B	39	V1		37 (1ZZ–FE)
D14	A	40	J5	B	39			

: **Relay Blocks**

Code	See Page	Relay Blocks (Relay Block Location)
1	23	Engine Room R/B (Engine Compartment Left)

: **Junction Block and Wire Harness Connector**

Code	See Page	Junction Block and Wire Harness (Connector Location)
IC	25	Engine Room Main Wire and Instrument Panel J/B (Lower Finish Panel)
ID	25	Floor Wire and Instrument Panel J/B (Lower Finish Panel)
IF	25	Instrument Panel Wire and Instrument Panel J/B (Lower Finish Panel)
IG		
IH		
IJ		
IK	24	
IL		
3A	29	Instrument Panel Wire and RH J/B (Right Side of the Instrument Panel Reinforcement)
3B		
4A	32	Instrument Panel Wire and Center J/B (Behind the Combination Meter)
4C		

: **Connector Joining Wire Harness and Wire Harness**

Code	See Page	Joining Wire Harness and Wire Harness (Connector Location)
EA1	42 (2ZZ–GE)	Engine Wire and Engine Room Main Wire (Inside of the Engine Room R/B)
	43 (1ZZ–FE)	
IA6	44	Engine Room Main Wire and Instrument Panel Wire (Instrument Panel Reinforcement LH)
IC1	44	Front Door LH Wire and Instrument Panel Wire (Left Kick Panel)
IC3		
ID2	44	Instrument Panel Wire and Floor Wire (Left Kick Panel)
IG3	45	Engine Wire and Instrument Panel Wire (Blower Unit RH)
IH1	45	Front Door RH Wire and Instrument Panel Wire (Right Kick Panel)
IH2		
II1	45	Instrument Panel Wire and Floor Wire (Under the Instrument Panel Center)
IL2	45	Floor Wire and Instrument Panel Wire (Right Kick Panel)
BA1	46	Rear Door LH Wire and Floor Wire (Left Center Pillar)
BB1	46	Rear Door RH Wire and Instrument Panel Wire (Right Center Pillar)
BC1	46	Back Door No.1 Wire and Floor Wire (Left Quarter Panel)
BC2		
BF1	46	Back Door No.1 Wire and Back Door No.2 Wire (Back Panel LH)
BF2		
BG1	46	Rear Door RH Wire and Floor Wire (Right Center Pillar)

: **Ground Points**

Code	See Page	Ground Points Location
EC	42 (2ZZ–GE)	Left Side of the Cylinder Head
	43 (1ZZ–FE)	
IE	44	Behind Combination Meter
IG	44	Right Kick Panel
BH	46	Left Quarter Panel

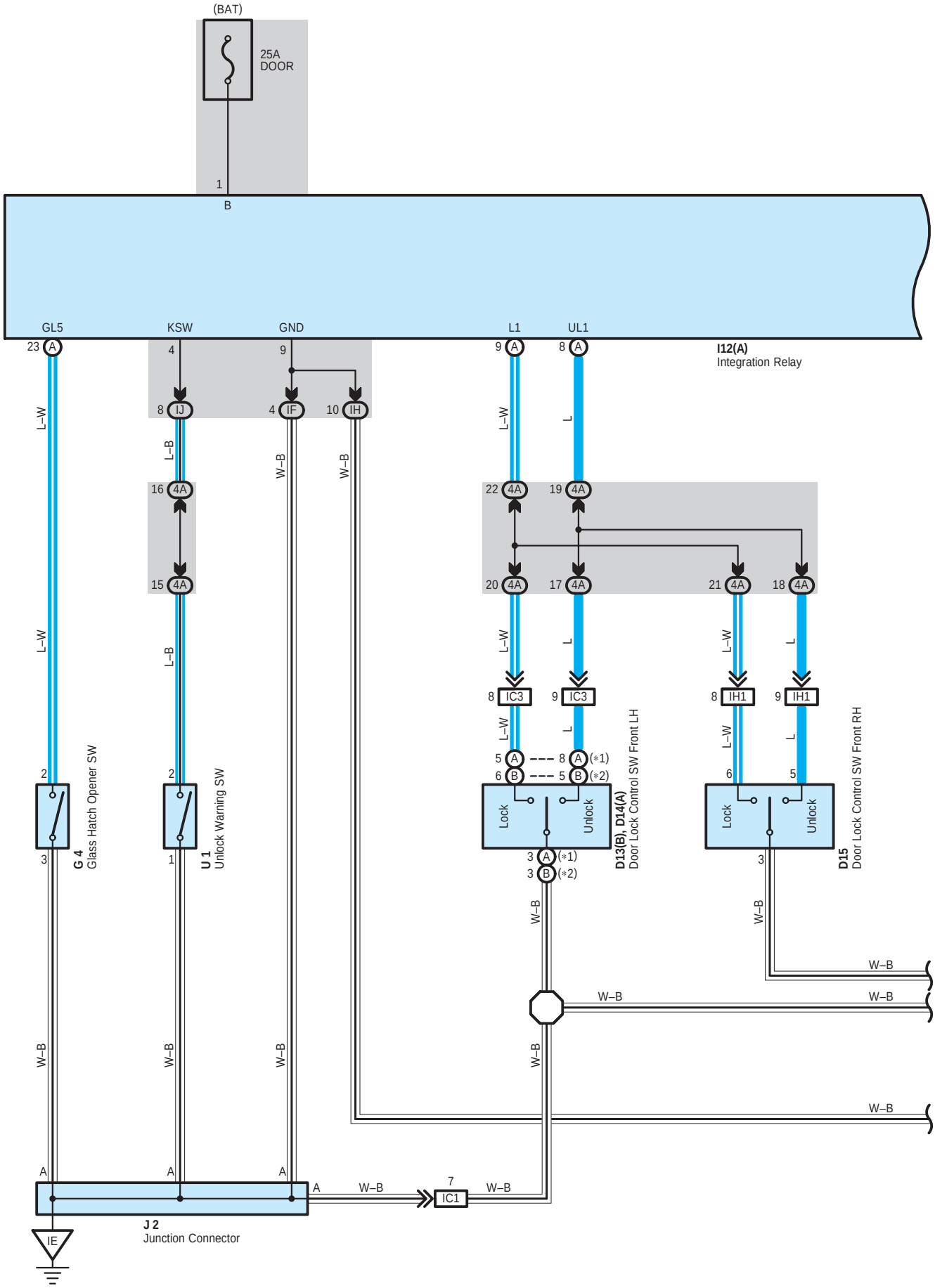
(BAT)
25A
DOOR
1
B
GL5
KSW
GND
L1
UL1
23 A
4
9
9 A
8 A
I12(A)
Integration Relay
8 IJ
4 IF
10 IH
L–W
L–B
W–B
L
16 4A
15 4A
22 4A
19 4A
20 4A
17 4A
21 4A
18 4A
8 IC3
9 IC3
8 IH1
9 IH1
5 A
6 B
8 A (*1)
5 B (*2)
Lock
Unlock
3 A (*1)
3 B (*2)
D13(B), D14(A)
Door Lock Control SW Front LH
D15
Door Lock Control SW Front RH
2
3
G 4
Glass Hatch Opener SW
1
U 1
Unlock Warning SW
A
7
IC1
J 2
Junction Connector
IE

∗ 1 : w/ Power Window
∗ 2 : w/o Power Window
∗ 3 : Separate Type Amplifier
∗ 4 : Built–In Type Amplifier
∗ 5 : A/T

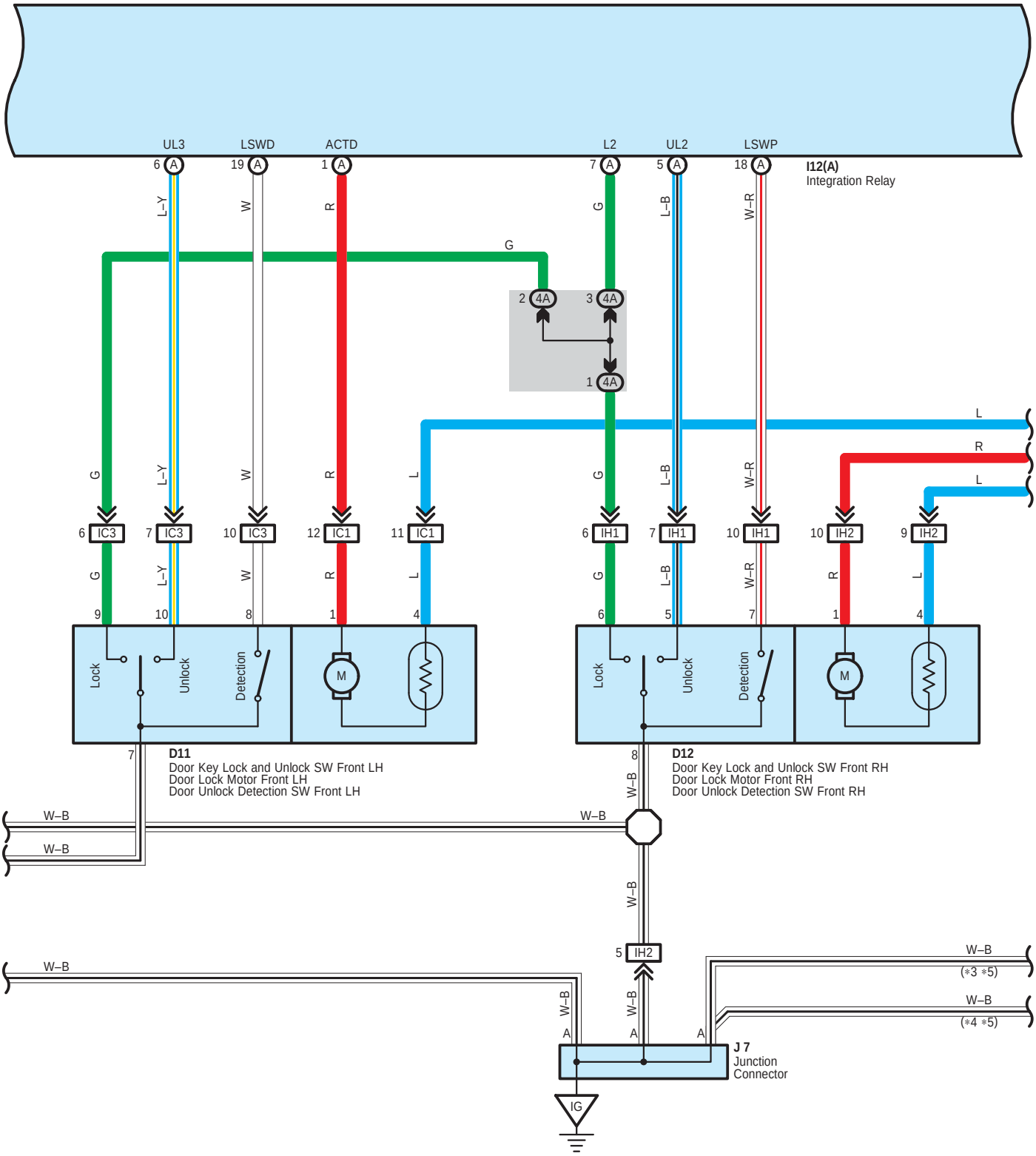

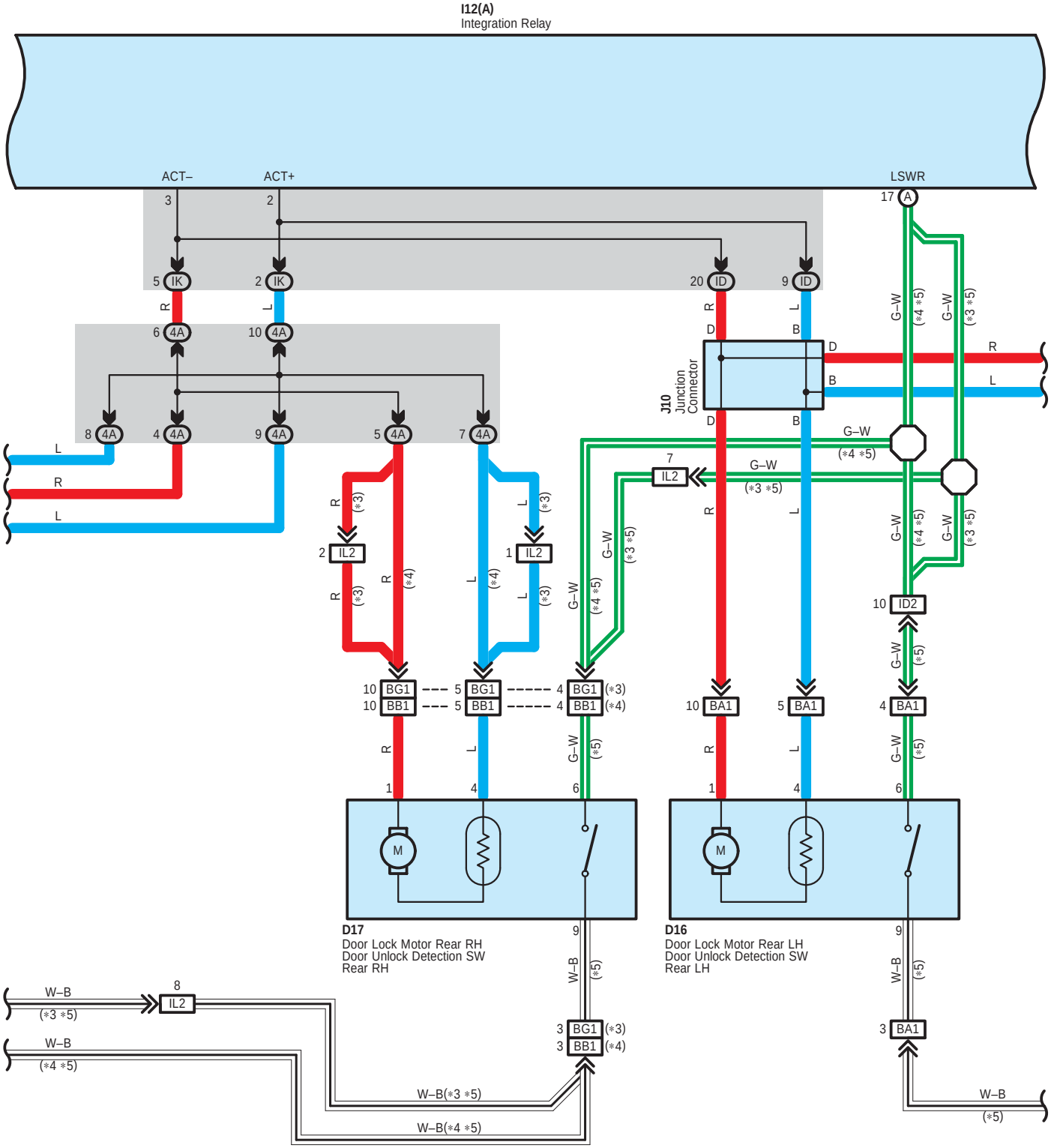
I12(A)
Integration Relay
ACT–
ACT+
LSWR
J10
Junction
Connector
D17
Door Lock Motor Rear RH
Door Unlock Detection SW
Rear RH
D16
Door Lock Motor Rear LH
Door Unlock Detection SW
Rear LH
W–B(∗3 ∗5)
W–B(∗4 ∗5)

∗ 3 : Separate Type Amplifier
∗ 4 : Built–In Type Amplifier
∗ 5 : A/T

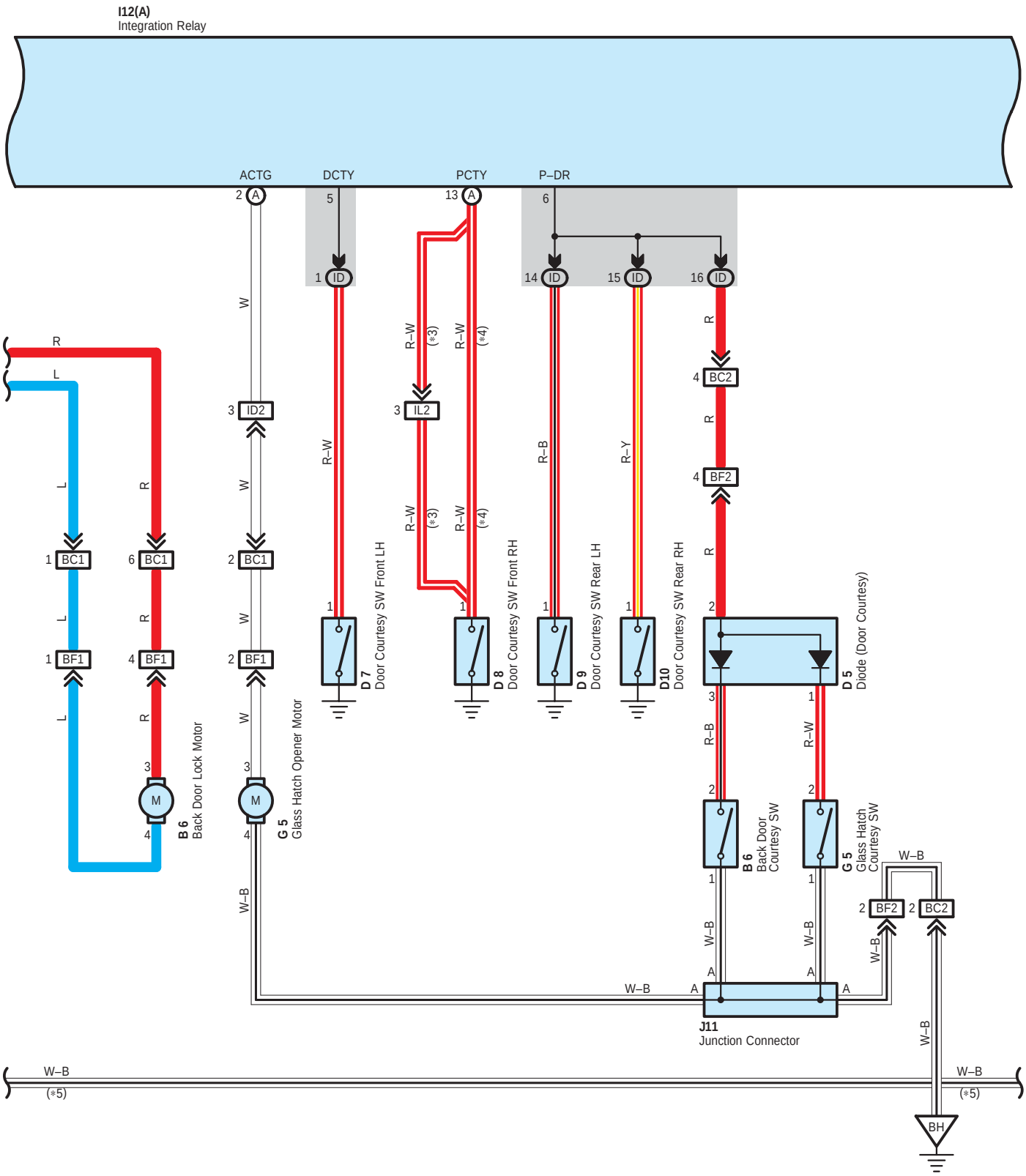

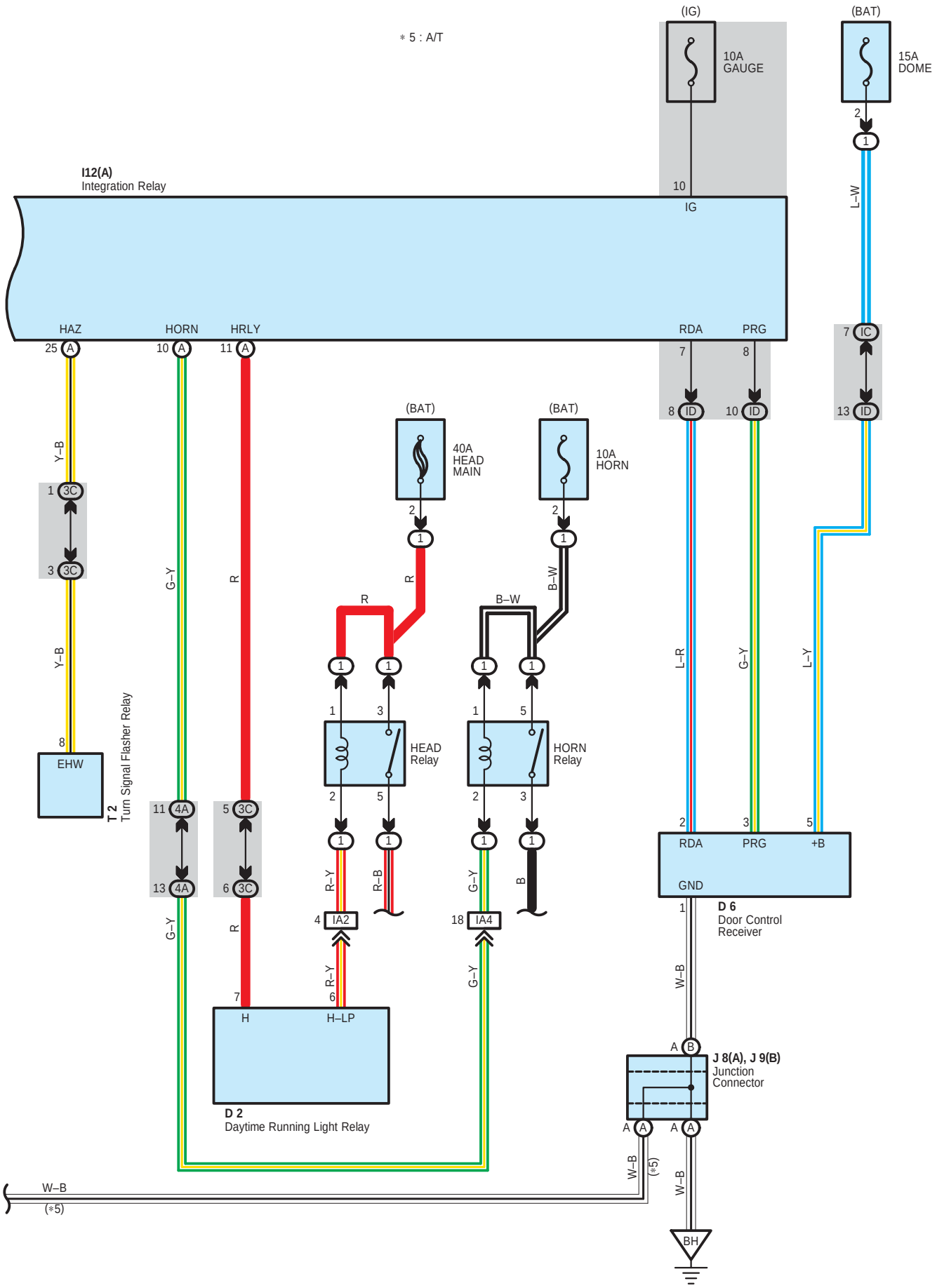
* 5 : A/T
(IG)
10A
GAUGE
(BAT)
15A
DOME
I12(A)
Integration Relay
IG
HAZ
HORN
HRLY
RDA
PRG
(BAT)
40A
HEAD
MAIN
(BAT)
10A
HORN
HEAD
Relay
HORN
Relay
EHW
T 2
Turn Signal Flasher Relay
IA2
IA4
H
H–LP
D 2
Daytime Running Light Relay
RDA
PRG
+B
GND
D 6
Door Control
Receiver
J 8(A), J 9(B)
Junction
Connector
BH
W–B
(*5)

System Outline

Door lock control (Lock and unlock) and panic control (TVIP alarm and flash) is performed by remote control, without the ignition key inserted in the door key cylinder, using low–power electrical waves emitted by a transmitter.

1. Wireless Door Lock or Unlock Normal Operation

With the ignition key not inserted into the ignition key cylinder (Unlock warning SW off) and all the doors completely closed, when the lock or unlock button (Transmitter) is pushed, the door control receiver receives the electrical waves from the transmitter, and sends a signal to the integration relay causing it to operate.
As a result, the integration relay judges whether the door is locked or unlocked based on the signal from the door lock motor and door unlock detection SW, and sends a signal to switch the condition from lock to unlock or vice versa, causing the door lock motor to operate.

2. Visual Confirmation of Lock or Unlock

If all doors indicate that they are locked after the lock command, parking lights and taillights will flash once. If any door indicates that it is open after the unlock command, parking lights and taillights will flash twice.

3. Wireless Door Unlock Operation

Pushing the unlock button (Transmitter) once, driver's door is unlocked. Furthermore, pushing the button again within 3 seconds, the other doors are unlocked.

4. Automatic Lock Operation

With the ignition key not inserted into the ignition key cylinder (Unlock warning SW off) and all the doors completely closed, after pushing the button (Transmitter) to unlock all the doors, if a door is not opened within 30 seconds, all the doors will be automatically relocked.

5. Glass Hatch Open Operation

With the ignition key not inserted into the ignition key cylinder, when the hatch button (Transmitter) is pushed, the door control receiver receives the electrical waves from the transmitter, and sends a signal to the integration relay causing it to operate.
As a result, the glass hatch is opened.

6. Wireless Control Stop Function

If a door is open (Door courtesy SW on), a signal is input from the door courtesy SW to the integration relay stopping wireless door lock or unlock.
If the ignition key is in the ignition key cylinder (Unlock warning SW on), the unlock warning SW inputs a signal to the integration relay stopping wireless door lock or unlock.

7. Repeat Function

In case an appropriate lock detection signal is not received after outputting a lock signal when pushing the lock button (Transmitter), 1 seconds later, the integration relay output the lock signal again.

8. Remote Panic Operation

Panic will function when doors are locked or unlocked, open or closed. When the panic button (Transmitter) is pushed once, theft alarm sounds and headlights and taillights flash. Then, the panic or the unlock button (Transmitter) is pushed once more, sounding and flashing will stop. Panic will not function when ignition key is in ignition key cylinder.

○ : Parts Location

Code	See Page	Code	See Page	Code	See Page
B6	40	D12	40	J2	39
D2	38	D13 B	40	J7	39
D5	40	D14 A	40	J8 A	40
D6	40	D15	40	J9 B	40
D7	40	D16	40	J10	40
D8	40	D17	40	J11	40
D9	40	G4	39	T2	39
D10	40	G5	40	U1	39
D11	40	I12 A	39		

▭ : Relay Blocks

Code	See Page	Relay Blocks (Relay Block Location)
1	23	Engine Room R/B (Engine Compartment Left)

: **Junction Block and Wire Harness Connector**

Code	See Page	Junction Block and Wire Harness (Connector Location)
IC	25	Engine Room Main Wire and Instrument Panel J/B (Lower Finish Panel)
ID	25	Floor Wire and Instrument Panel J/B (Lower Finish Panel)
IF	25	Instrument Panel Wire and Instrument Panel J/B (Lower Finish Panel)
IH		
IJ		
IK	24	
3C	29	Instrument Panel Wire and RH J/B (Right Side of the Instrument Panel Reinforcement)
4A	32	Instrument Panel Wire and Center J/B (Behind the Combination Meter)

: **Connector Joining Wire Harness and Wire Harness**

Code	See Page	Joining Wire Harness and Wire Harness (Connector Location)
IA2	44	Engine Room Main Wire and Instrument Panel Wire (Instrument Panel Reinforcement LH)
IA4		
IC1	44	Front Door LH Wire and Instrument Panel Wire (Left Kick Panel)
IC3		
ID2	44	Instrument Panel Wire and Floor Wire (Left Kick Panel)
IH1	45	Front Door RH Wire and Instrument Panel Wire (Right Kick Panel)
IH2		
IL2	45	Floor Wire and Instrument Panel Wire (Right Kick Panel)
BA1	46	Rear Door LH Wire and Floor Wire (Left Center Pillar)
BB1	46	Rear Door RH Wire and Instrument Panel Wire (Right Center Pillar)
BC1	46	Back Door No.1 Wire and Floor Wire (Left Quarter Panel)
BC2		
BF1	46	Back Door No.1 Wire and Back Door No.2 Wire (Back Panel LH)
BF2		
BG1	46	Rear Door RH Wire and Floor Wire (Right Center Pillar)

: **Ground Points**

Code	See Page	Ground Points Location
IE	44	Behind Combination Meter
IG	44	Right Kick Panel
BH	46	Left Quarter Panel

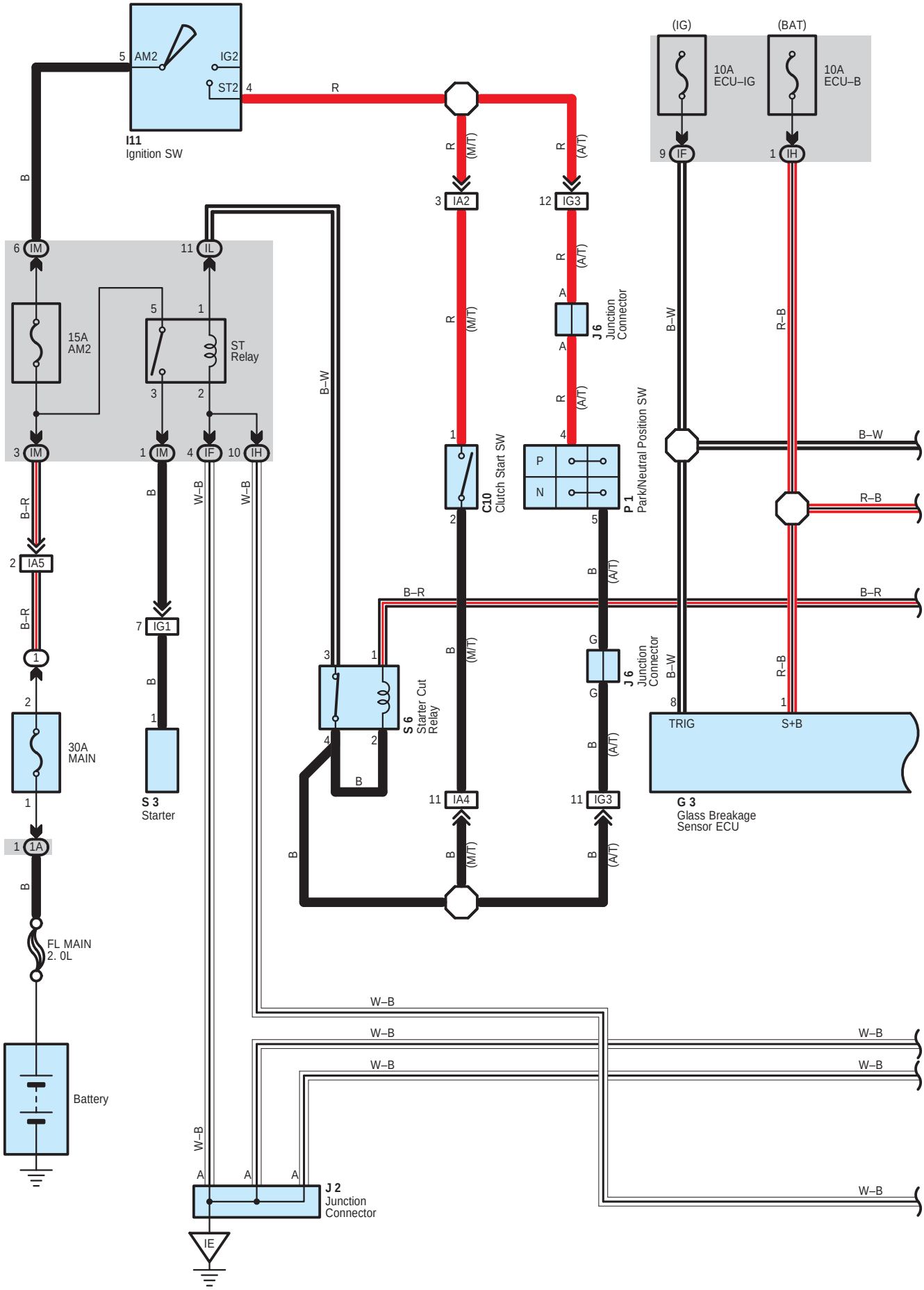
I11
Ignition SW
AM2
IG2
ST2
15A
AM2
ST
Relay
IM
IL
IF
IH
IA2
IG3
IA5
IG1
IA4
1A
30A
MAIN
FL MAIN
2. 0L
Battery
S 3
Starter
C10
Clutch Start SW
J 6
Junction
Connector
P 1
Park/Neutral Position SW
S 6
Starter Cut
Relay
(IG)
(BAT)
10A
ECU–IG
10A
ECU–B
TRIG
S+B
G 3
Glass Breakage
Sensor ECU
J 2
Junction
Connector
IE
(M/T)
(A/T)

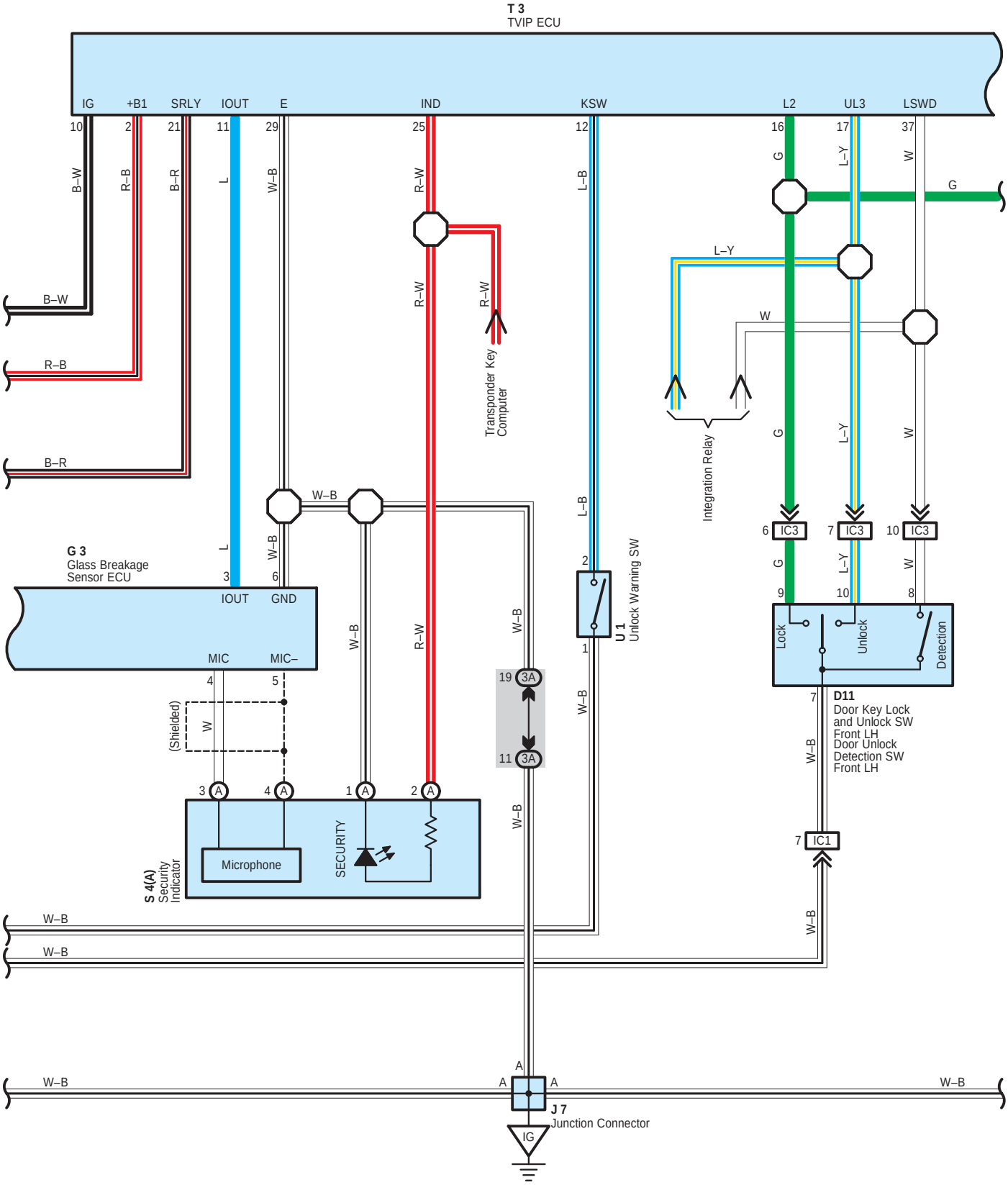
T 3
TVIP ECU
IG
+B1
SRLY
IOUT
E
IND
KSW
L2
UL3
LSWD
10
2
21
11
29
25
12
16
17
37
B–W
R–B
B–R
L
W–B
R–W
L–B
G
L–Y
W
Transponder Key Computer
Integration Relay
IC3
6
7
10
9
8
Lock
Unlock
Detection
D11
Door Key Lock and Unlock SW Front LH
Door Unlock Detection SW Front LH
IC1
G 3
Glass Breakage Sensor ECU
IOUT
GND
MIC
MIC–
3
6
4
5
(Shielded)
U 1
Unlock Warning SW
1
2
19
11
3A
S 4(A)
Security Indicator
Microphone
SECURITY
A
J 7
Junction Connector
IG

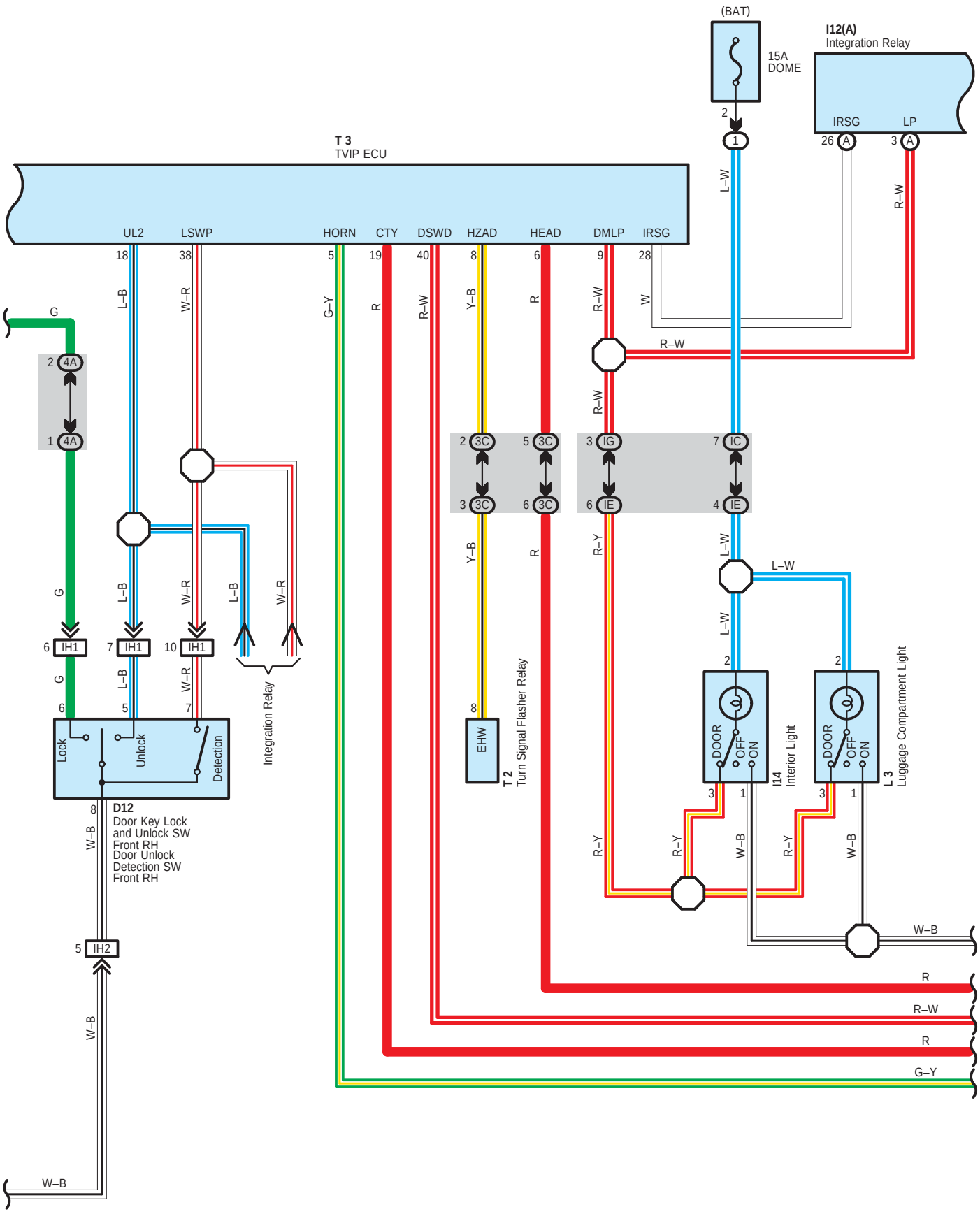
(BAT)
15A
DOME
I12(A)
Integration Relay
IRSG
LP
T 3
TVIP ECU
UL2
LSWP
HORN
CTY
DSWD
HZAD
HEAD
DMLP
IRSG
4A
IH1
IH2
3C
IG
IC
IE
EHW
T 2
Turn Signal Flasher Relay
Lock
Unlock
Detection
Integration Relay
D12
Door Key Lock
and Unlock SW
Front RH
Door Unlock
Detection SW
Front RH
DOOR
OFF
ON
I14
Interior Light
L 3
Luggage Compartment Light
G
L–B
W–R
G–Y
R
R–W
Y–B
W
R–Y
W–B
L–W

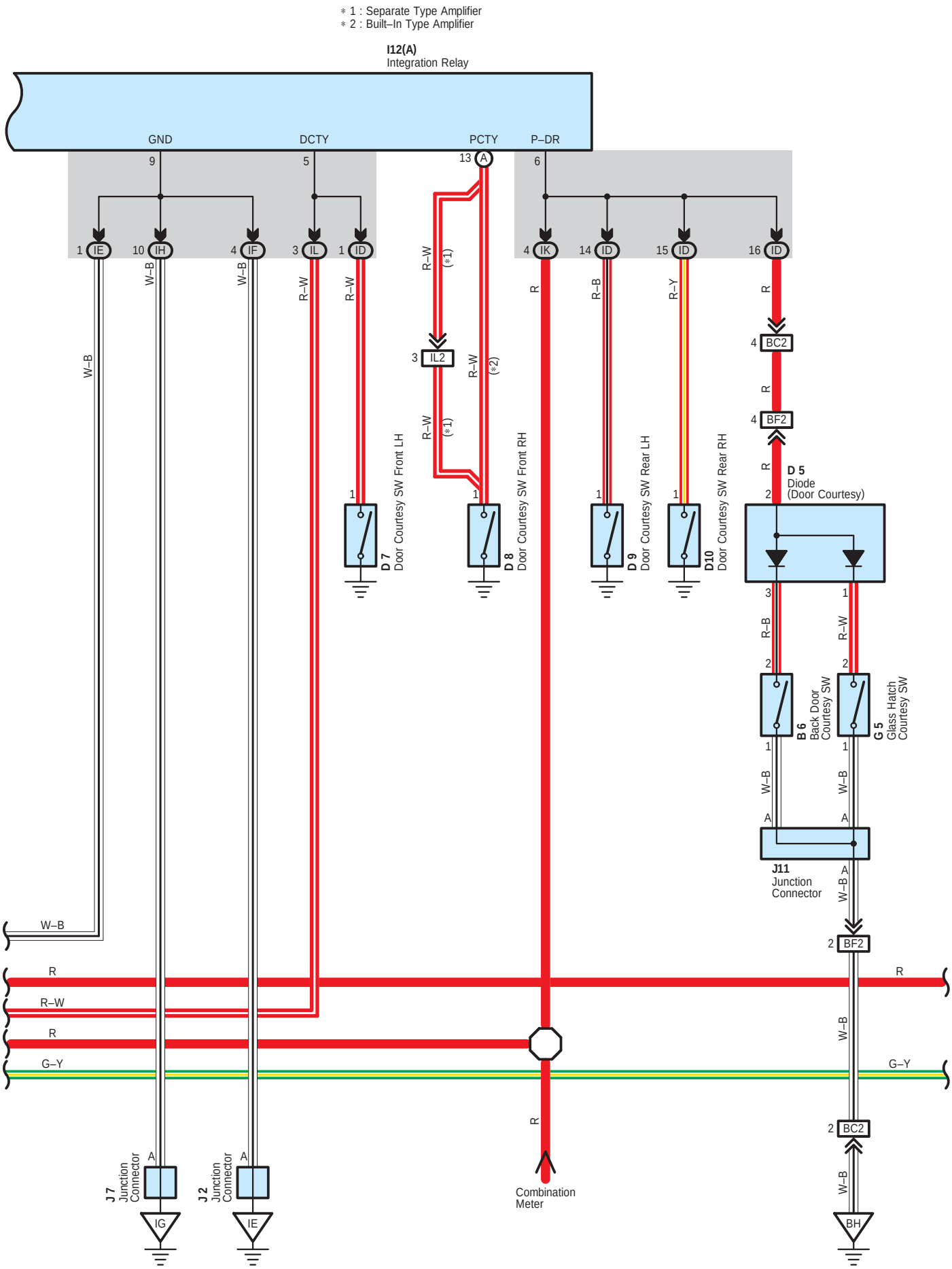
* 1 : Separate Type Amplifier
* 2 : Built–In Type Amplifier
I12(A)
Integration Relay
GND
DCTY
PCTY
P–DR
IE
IH
IF
IL
ID
IK
IL2
BC2
BF2
D 5
Diode
(Door Courtesy)
D 7
Door Courtesy SW Front LH
D 8
Door Courtesy SW Front RH
D 9
Door Courtesy SW Rear LH
D10
Door Courtesy SW Rear RH
B 6
Back Door
Courtesy SW
G 5
Glass Hatch
Courtesy SW
J11
Junction
Connector
J 7
Junction
Connector
J 2
Junction
Connector
IG
IE
BH
Combination
Meter
W–B
R–W
R
G–Y
R–B
R–Y
(*1)
(*2)

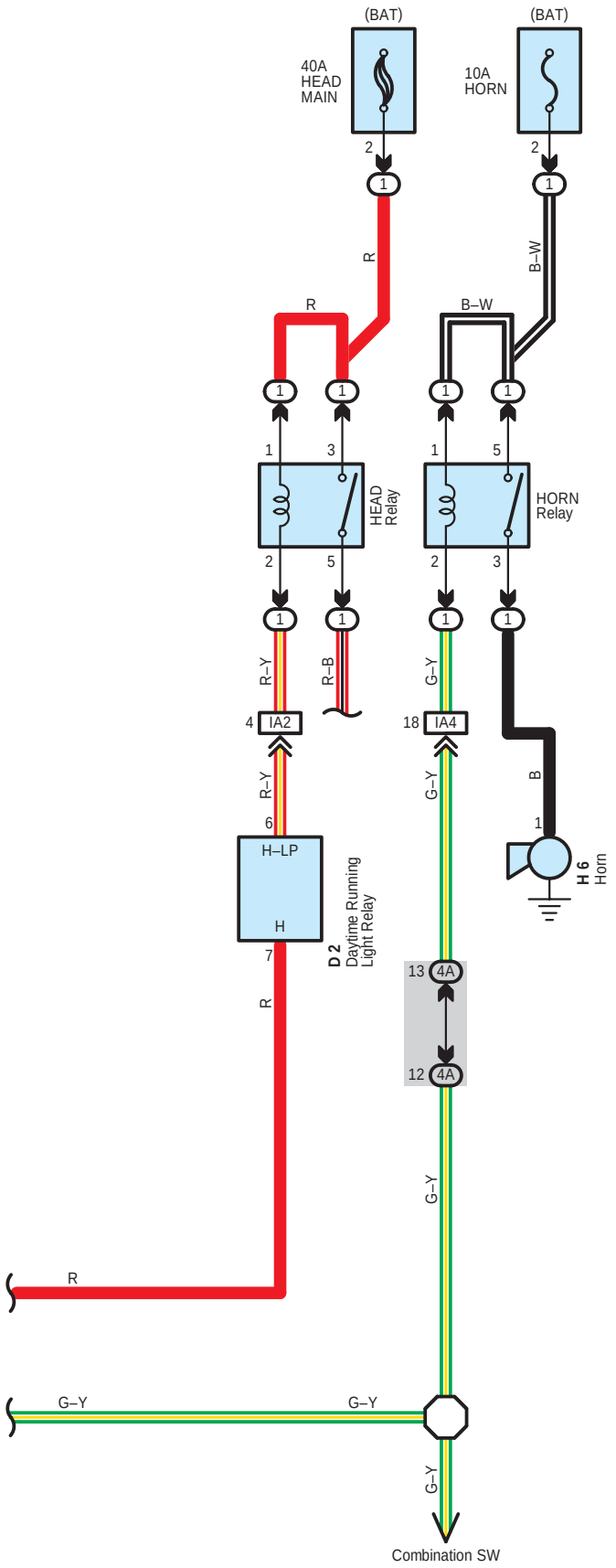
(BAT)
(BAT)
40A
HEAD
MAIN
10A
HORN
2
2
1
1
R
B–W
R
B–W
1
1
1
1
1
3
1
5
HEAD
Relay
HORN
Relay
2
5
2
3
1
1
1
1
R–Y
R–B
G–Y
4
IA2
18
IA4
R–Y
G–Y
B
6
1
H–LP
H
H 6
Horn
D 2
Daytime Running
Light Relay
7
13
4A
12
4A
R
G–Y
R
G–Y
G–Y
G–Y
Combination SW

: Parts Location

Code	See Page	Code	See Page	Code	See Page
B6	40	G3	39	J11	40
C10	38	G5	40	L3	41
D2	38	H6	34 (2ZZ–GE)	P1	37 (1ZZ–FE)
D5	40		36 (1ZZ–FE)	S3	35 (2ZZ–GE)
D7	40	I11	39		37 (1ZZ–FE)
D8	40	I12 A	39	S4 A	39
D9	40	I14	40	S6	39
D10	40	J2	39	T2	39
D11	40	J6	39	T3	39
D12	40	J7	39	U1	39

: Relay Blocks

Code	See Page	Relay Blocks (Relay Block Location)
1	23	Engine Room R/B (Engine Compartment Left)

: Junction Block and Wire Harness Connector

Code	See Page	Junction Block and Wire Harness (Connector Location)
IC	25	Engine Room Main Wire and Instrument Panel J/B (Lower Finish Panel)
ID	25	Floor Wire and Instrument Panel J/B (Lower Finish Panel)
IE	25	Roof Wire and Instrument Panel J/B (Lower Finish Panel)
IF	25	Instrument Panel Wire and Instrument Panel J/B (Lower Finish Panel)
IG		
IH		
IK	24	
IL		
IM		
1A	23	Engine Wire and Engine Room J/B (Engine Compartment Left)
3A	29	Instrument Panel Wire and RH J/B (Right Side of the Instrument Panel Reinforcement)
3C		
4A	32	Instrument Panel Wire and Center J/B (Behind the Combination Meter)

: Connector Joining Wire Harness and Wire Harness

Code	See Page	Joining Wire Harness and Wire Harness (Connector Location)
IA2	44	Engine Room Main Wire and Instrument Panel Wire (Instrument Panel Reinforcement LH)
IA4		
IA5		
IC1	44	Front Door LH Wire and Instrument Panel Wire (Left Kick Panel)
IC3		
IG1	45	Engine Wire and Instrument Panel Wire (Blower Unit RH)
IG3		
IH1	45	Front Door RH Wire and Instrument Panel Wire (Right Kick Panel)
IH2		
IL2	45	Floor Wire and Instrument Panel Wire (Right Kick Panel)
BC2	46	Back Door No.1 Wire and Floor Wire (Left Quarter Panel)
BF2	46	Back Door No.1 Wire and Back Door No.2 Wire (Back Panel LH)

: Ground Points

Code	See Page	Ground Points Location
IE	44	Behind Combination Meter
IG	44	Right Kick Panel
BH	46	Left Quarter Panel

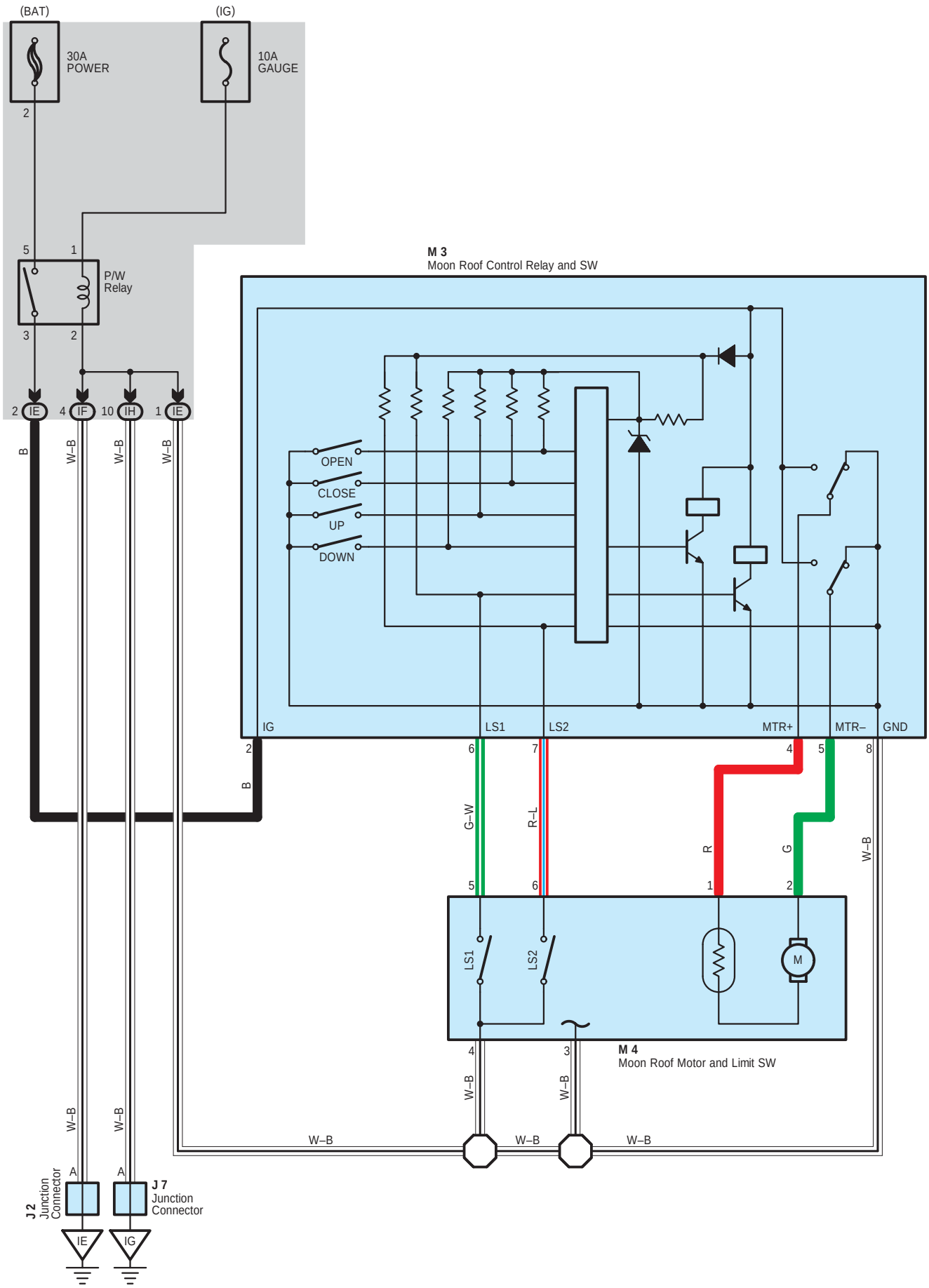
(BAT)
(IG)
30A
POWER
10A
GAUGE
P/W
Relay
M 3
Moon Roof Control Relay and SW
OPEN
CLOSE
UP
DOWN
IG
LS1
LS2
MTR+
MTR–
GND
M 4
Moon Roof Motor and Limit SW
J 2
Junction
Connector
J 7
Junction
Connector
IE
IG

System Outline

The moon roof can be operated when the ignition SW is turned to ON position.

1. Slide Open Operation

The moon roof fully opens automatically by pressing the slide open button of the moon roof control SW once. If the moon roof control switch is pressed again when the moon roof is operating, the movement of the moon roof stops.
The operation of slide open is not worked when the moon roof at tilt up position.

2. Slide Close Operation

If you keep pressing the slide close button of the moon roof control SW when the moon roof is open, the moon roof closes half and stops the operation once. If you keep pressing the slide close once again, the moon roof fully closes.

3. Tilt Up Operation

If you press the tilt up button of the moon roof control SW, the moon roof is tilted up. However, the moon roof is not tilted up when it is open

4. Tilt Down Operation

If you press the tilt down button when the tilt up of the moon roof control SW is pressed, the moon roof is tilted down.

○ : **Parts Location**

Code	See Page	Code	See Page	Code	See Page
J2	39	M3	41		
J7	39	M4	41		

: **Junction Block and Wire Harness Connector**

Code	See Page	Junction Block and Wire Harness (Connector Location)
IE	25	Roof Wire and Instrument Panel J/B (Lower Finish Panel)
IF	25	Instrument Panel Wire and Instrument Panel J/B (Lower Finish Panel)
IH		

▽ : **Ground Points**

Code	See Page	Ground Points Location
IE	44	Behind Combination Meter
IG	44	Right Kick Panel

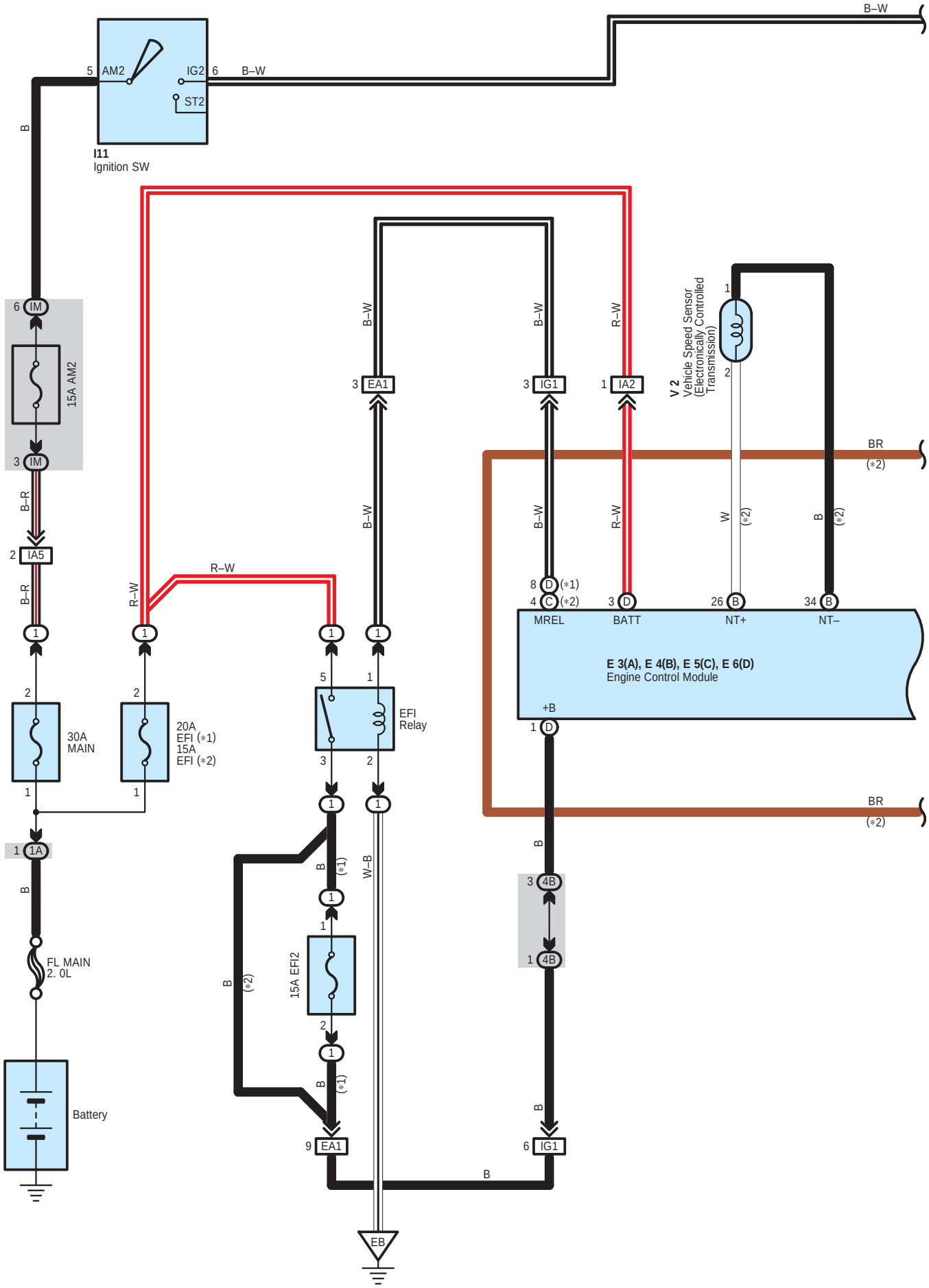
B–W
5 AM2
IG2 6
ST2
B–W
B
I11
Ignition SW
6 IM
15A AM2
3 IM
B–R
2 IA5
B–R
1
2
30A
MAIN
1
1 1A
B
FL MAIN
2. 0L
Battery
R–W
R–W
1
2
20A
EFI (*1)
15A
EFI (*2)
1
B–W
3 EA1
B–W
1
1
5
1
EFI
Relay
3
2
1
1
B
(*1)
W–B
1
15A EFI2
B
(*2)
2
1
B
(*1)
9 EA1
B–W
3 IG1
R–W
1 IA2
B–W
R–W
8 D (*1)
4 C (*2)
3 D
MREL
BATT
+B
1 D
B
3 4B
1 4B
B
6 IG1
B
EB
V 2
Vehicle Speed Sensor
(Electronically Controlled
Transmission)
1
2
BR
(*2)
W
(*2)
B
(*2)
26 B
34 B
NT+
NT–
E 3(A), E 4(B), E 5(C), E 6(D)
Engine Control Module
BR
(*2)

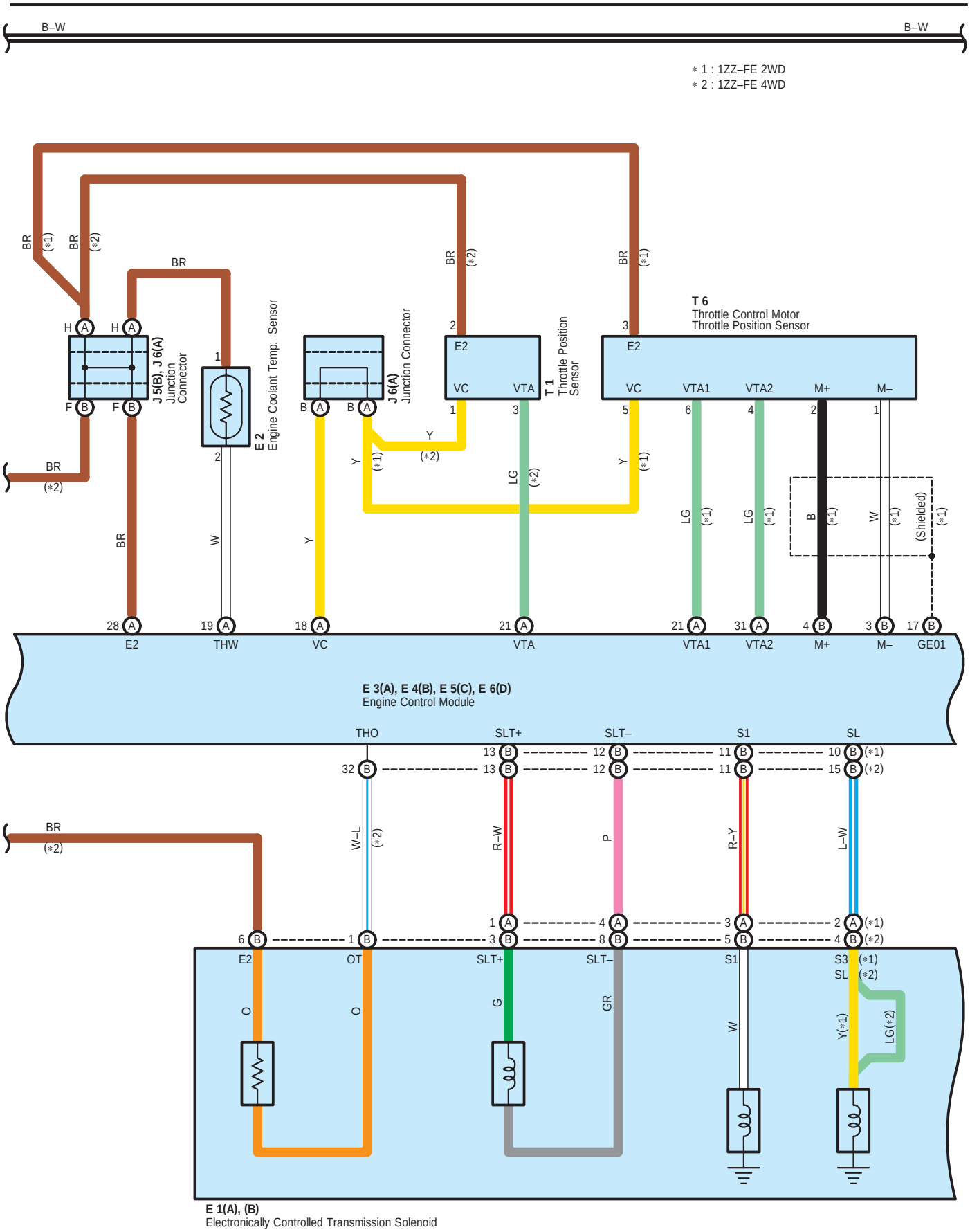
B–W
B–W
∗1 : 1ZZ–FE 2WD
∗2 : 1ZZ–FE 4WD
J 5(B), J 6(A)
Junction Connector
E 2
Engine Coolant Temp. Sensor
J 6(A)
Junction Connector
T 1
Throttle Position Sensor
T 6
Throttle Control Motor
Throttle Position Sensor
E2
VC
VTA
VTA1
VTA2
M+
M–
(Shielded)
E2
THW
VC
VTA
VTA1
VTA2
M+
M–
GE01
E 3(A), E 4(B), E 5(C), E 6(D)
Engine Control Module
THO
SLT+
SLT–
S1
SL
E2
OT
SLT+
SLT–
S1
S3
SL
E 1(A), (B)
Electronically Controlled Transmission Solenoid

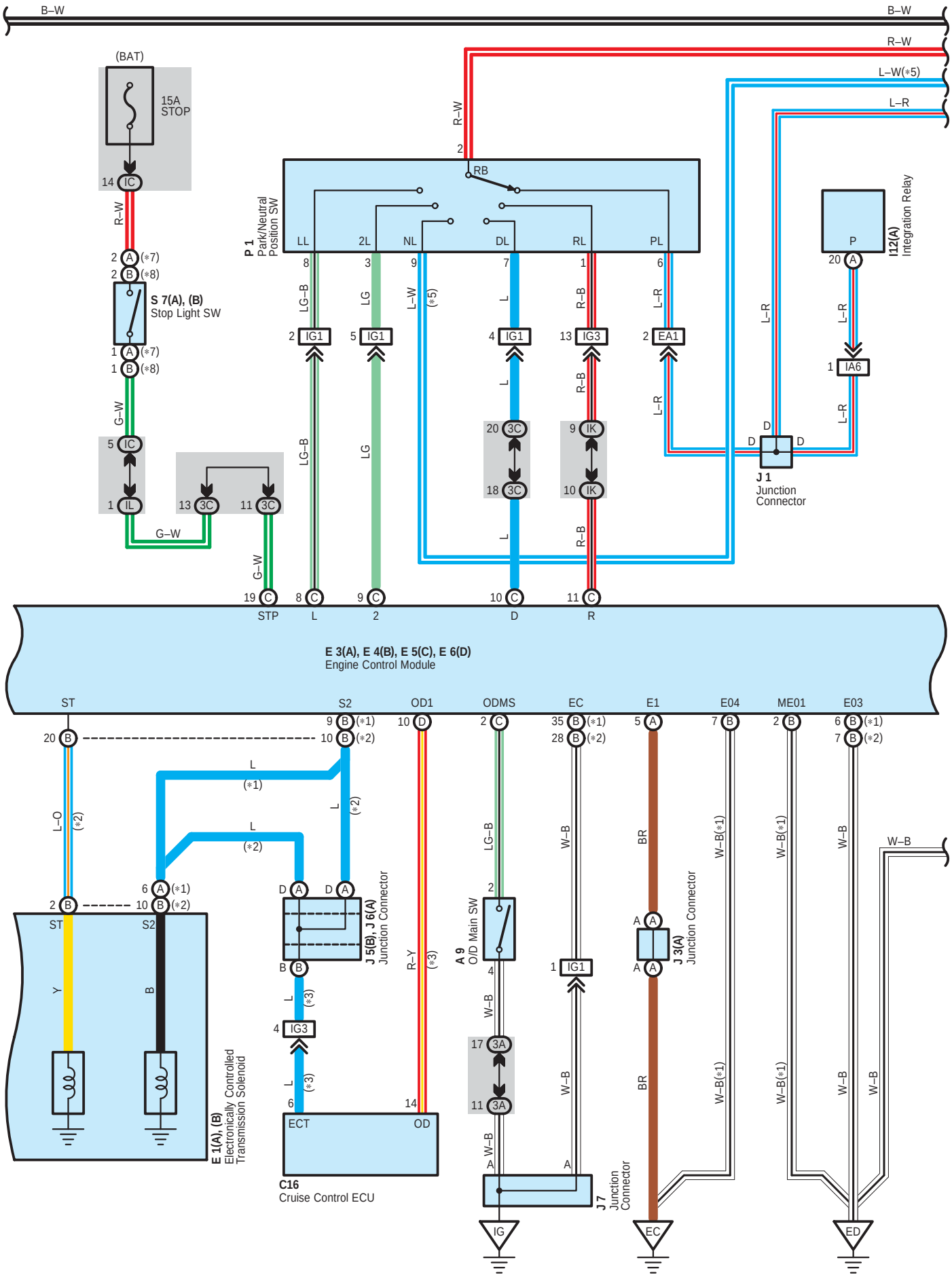
B–W
R–W
L–W(*5)
L–R
(BAT)
15A
STOP
14 IC
R–W
2 A (*7)
2 B (*8)
S 7(A), (B)
Stop Light SW
1 A (*7)
1 B (*8)
G–W
5 IC
1 IL
13 3C
11 3C
G–W
P 1
Park/Neutral
Position SW
RB
LL
2L
NL
DL
RL
PL
LG–B
LG
L–W
(*5)
L
R–B
L–R
2 IG1
5 IG1
4 IG1
13 IG3
2 EA1
20 3C
18 3C
9 IK
10 IK
19 C
8 C
9 C
10 C
11 C
STP
L
2
D
R
I12(A)
Integration Relay
P
20 A
1 IA6
J 1
Junction
Connector
E 3(A), E 4(B), E 5(C), E 6(D)
Engine Control Module
ST
S2
OD1
ODMS
EC
E1
E04
ME01
E03
20 B
9 B (*1)
10 B (*2)
10 D
2 C
35 B (*1)
28 B (*2)
5 A
7 B
2 B
7 B (*1)
7 B (*2)
L–O
(*2)
L
(*1)
(*2)
6 A (*1)
10 B (*2)
D A
B B
J 5(B), J 6(A)
Junction Connector
R–Y
(*3)
LG–B
W–B
BR
W–B(*1)
A 9
O/D Main SW
J 3(A)
Junction Connector
4 IG3
1 IG1
17 3A
11 3A
6
14
ECT
OD
E 1(A), (B)
Electronically Controlled
Transmission Solenoid
C16
Cruise Control ECU
J 7
Junction
Connector
IG
EC
ED

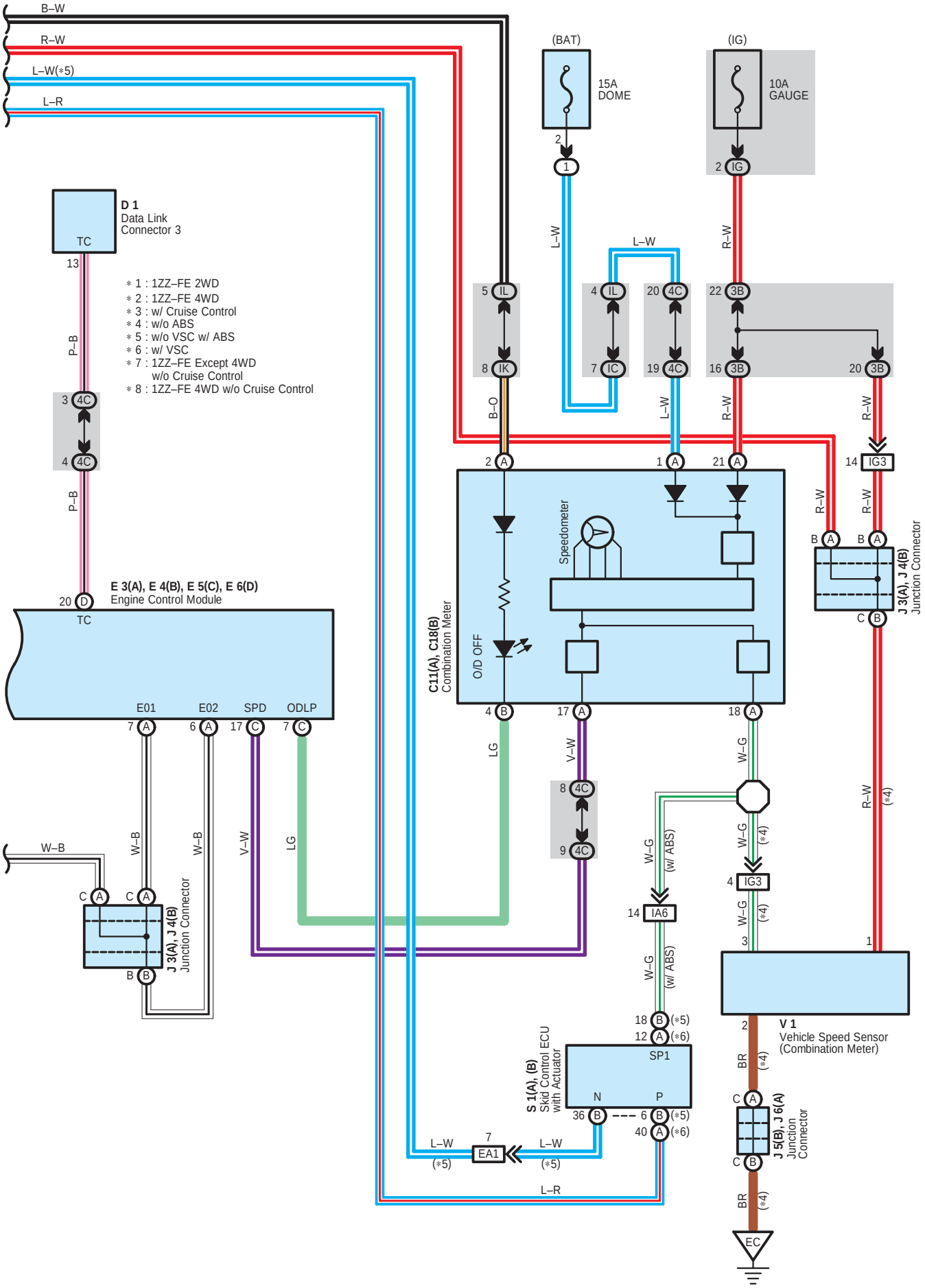
B–W
R–W
L–W(*5)
L–R
(BAT)
15A
DOME
(IG)
10A
GAUGE
D 1
Data Link
Connector 3
TC
* 1 : 1ZZ–FE 2WD
* 2 : 1ZZ–FE 4WD
* 3 : w/ Cruise Control
* 4 : w/o ABS
* 5 : w/o VSC w/ ABS
* 6 : w/ VSC
* 7 : 1ZZ–FE Except 4WD
w/o Cruise Control
* 8 : 1ZZ–FE 4WD w/o Cruise Control
E 3(A), E 4(B), E 5(C), E 6(D)
Engine Control Module
E01
E02
SPD
ODLP
C11(A), C18(B)
Combination Meter
Speedometer
O/D OFF
J 3(A), J 4(B)
Junction Connector
IG3
IA6
EA1
S 1(A), (B)
Skid Control ECU
with Actuator
SP1
V 1
Vehicle Speed Sensor
(Combination Meter)
J 5(B), J 6(A)
Junction
Connector
EC
W–B
P–B
B–O
L–W
R–W
LG
V–W
W–G
BR
(w/ ABS)
(*4)
(*5)
(*6)

System Outline

Previous automatic transaxle have selected each gear shift using mechanically controlled throttle hydraulic pressure, governor hydraulic pressure and lock–up hydraulic pressure. The electronically controlled transmission, however, controls the line pressure and lock–up pressure etc. electrically, through the solenoid valve. The engine control module controls each solenoid valve based on the input signals from each sensor, which makes smooth driving possible by shift selection for each gear that is most appropriate to the driving conditions at that time.

1. Gear Shift Operation

When driving, the engine warm up condition is input as a signal to TERMINAL THW of the engine control module from the engine coolant temp. sensor and the vehicle speed signal from vehicle speed sensor is input to TERMINAL NT+ of the engine control module. At the same time, the throttle valve opening signal from the throttle position sensor is input to TERMINAL VTA (4WD) or TERMINALS VTA1 and VTA2 (2WD) of the engine control module as throttle angle signal.
Based on these signals, the engine control module selects the best shift position for the driving conditions and sends current to the electronically controlled transmission solenoid.

2. Stop Light SW Circuit

If the brake pedal is depressed (Stop light SW on) when driving in lock–up condition, a signal is input to TERMINAL STP of the engine control module, the engine control module operates and continuity to the lock–up solenoid is cut.

3. Overdrive Circuit

∗ Overdrive on
When the engine is turned on from ignition off, the engine control module turns the O/D on. When the O/D main SW is pushed while the O/D is off, a signal is input into TERMINAL ODMS of the engine control module, and the O/D is turned on by the engine control module. In this case, the engine control module controls the gear shift according to the vehicle's driving condition, using the O/D range. At this time, the O/D OFF indicator light is off.

∗ Overdrive off
When the O/D main SW is pushed while the O/D is on, a signal is input into TERMINAL ODMS of the engine control module, and the O/D is turned off. At this time, the current flows through the O/D OFF indicator light to TERMINAL ODLP of the engine control module. As a result, the O/D OFF indicator light turns on, and the engine control module controls the gear shift according to the vehicle's driving condition, without using the O/D range.

: Parts Location

Code		See Page	Code		See Page	Code		See Page
A9		38	E5	C	38	P1		37 (1ZZ–FE)
C11	A	38	E6	D	38	S1	A	37 (1ZZ–FE)
C16		38	I11		39		B	37 (1ZZ–FE)
C18	B	38	I12	A	39	S7	A	39
D1		38	J1		37 (1ZZ–FE)		B	39
E1	A	36 (1ZZ–FE)	J3	A	39	T1		37 (1ZZ–FE)
	B	36 (1ZZ–FE)	J4	B	39	T6		37 (1ZZ–FE)
E2		36 (1ZZ–FE)	J5	B	39	V1		37 (1ZZ–FE)
E3	A	38	J6	A	39	V2		37 (1ZZ–FE)
E4	B	38	J7		39			

: Relay Blocks

Code	See Page	Relay Blocks (Relay Block Location)
1	23	Engine Room R/B (Engine Compartment Left)

: **Junction Block and Wire Harness Connector**

Code	See Page	Junction Block and Wire Harness (Connector Location)
IC	25	Engine Room Main Wire and Instrument Panel J/B (Lower Finish Panel)
IG	25	Instrument Panel Wire and Instrument Panel J/B (Lower Finish Panel)
IK	24	
IL		
IM		
1A	23	Engine Wire and Engine Room J/B (Engine Compartment Left)
3A	29	Instrument Panel Wire and RH J/B (Right Side of the Instrument Panel Reinforcement)
3B		
3C		
4B	32	Instrument Panel Wire and Center J/B (Behind the Combination Meter)
4C		

: **Connector Joining Wire Harness and Wire Harness**

Code	See Page	Joining Wire Harness and Wire Harness (Connector Location)
EA1	43 (1ZZ–FE)	Engine Wire and Engine Room Main Wire (Inside of the Engine Room R/B)
IA2	44	Engine Room Main Wire and Instrument Panel Wire (Instrument Panel Reinforcement LH)
IA5		
IA6		
IG1	45	Engine Wire and Instrument Panel Wire (Blower Unit RH)
IG3		

: **Ground Points**

Code	See Page	Ground Points Location
EB	43 (1ZZ–FE)	Front Left Suspension Tower
EC	43 (1ZZ–FE)	Left Side of the Cylinder Head
ED		
IG	44	Right Kick Panel

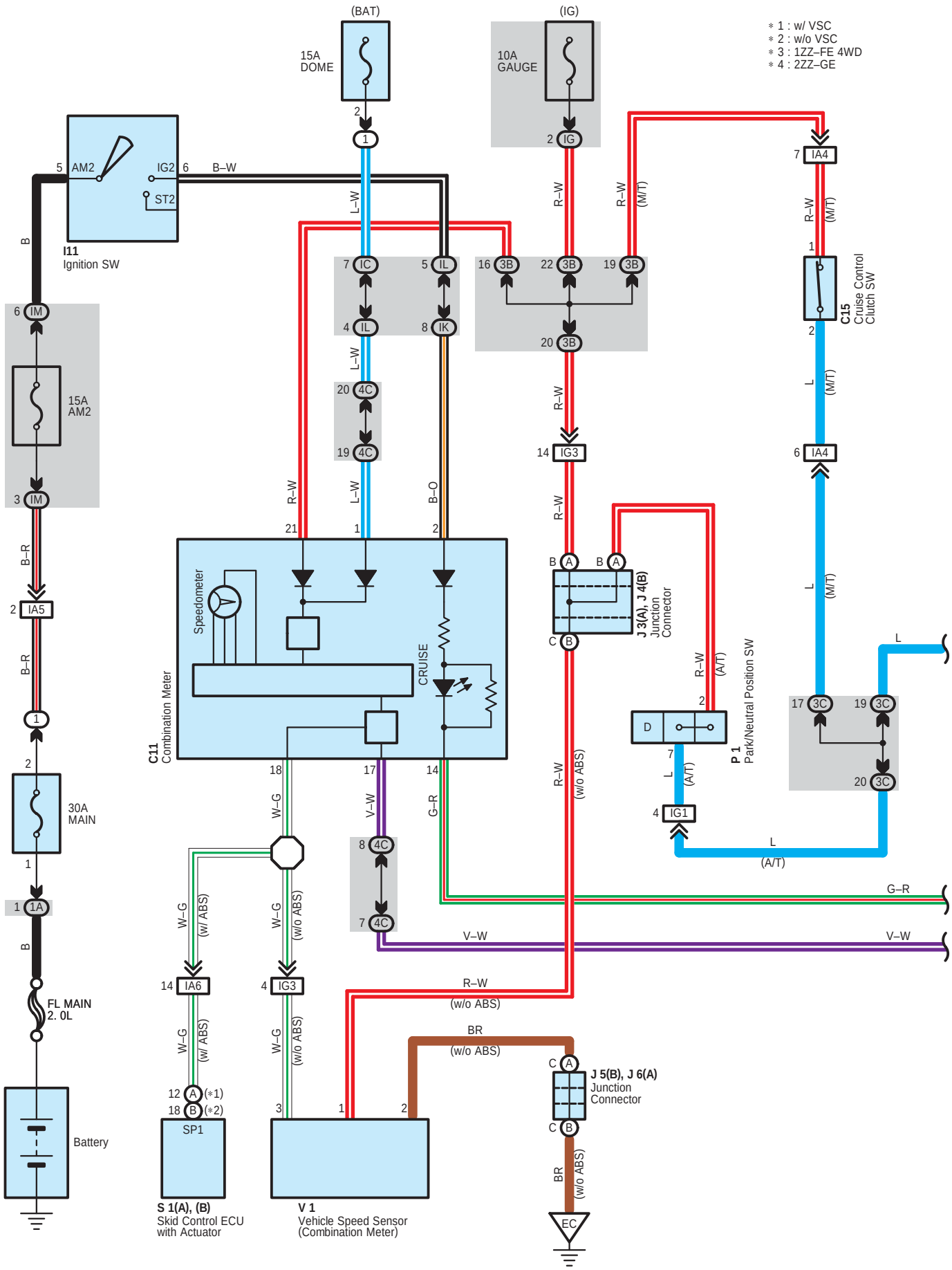
(BAT)
15A
DOME
(IG)
10A
GAUGE
* 1 : w/ VSC
* 2 : w/o VSC
* 3 : 1ZZ–FE 4WD
* 4 : 2ZZ–GE
I11
Ignition SW
AM2
IG2
ST2
B–W
15A
AM2
30A
MAIN
FL MAIN
2. 0L
Battery
C11
Combination Meter
Speedometer
CRUISE
J 3(A), J 4(B)
Junction
Connector
P 1
Park/Neutral Position SW
C15
Cruise Control
Clutch SW
J 5(B), J 6(A)
Junction
Connector
S 1(A), (B)
Skid Control ECU
with Actuator
SP1
V 1
Vehicle Speed Sensor
(Combination Meter)
EC
R–W
L–W
B–O
B–R
W–G
V–W
G–R
BR
(w/ ABS)
(w/o ABS)
(M/T)
(A/T)

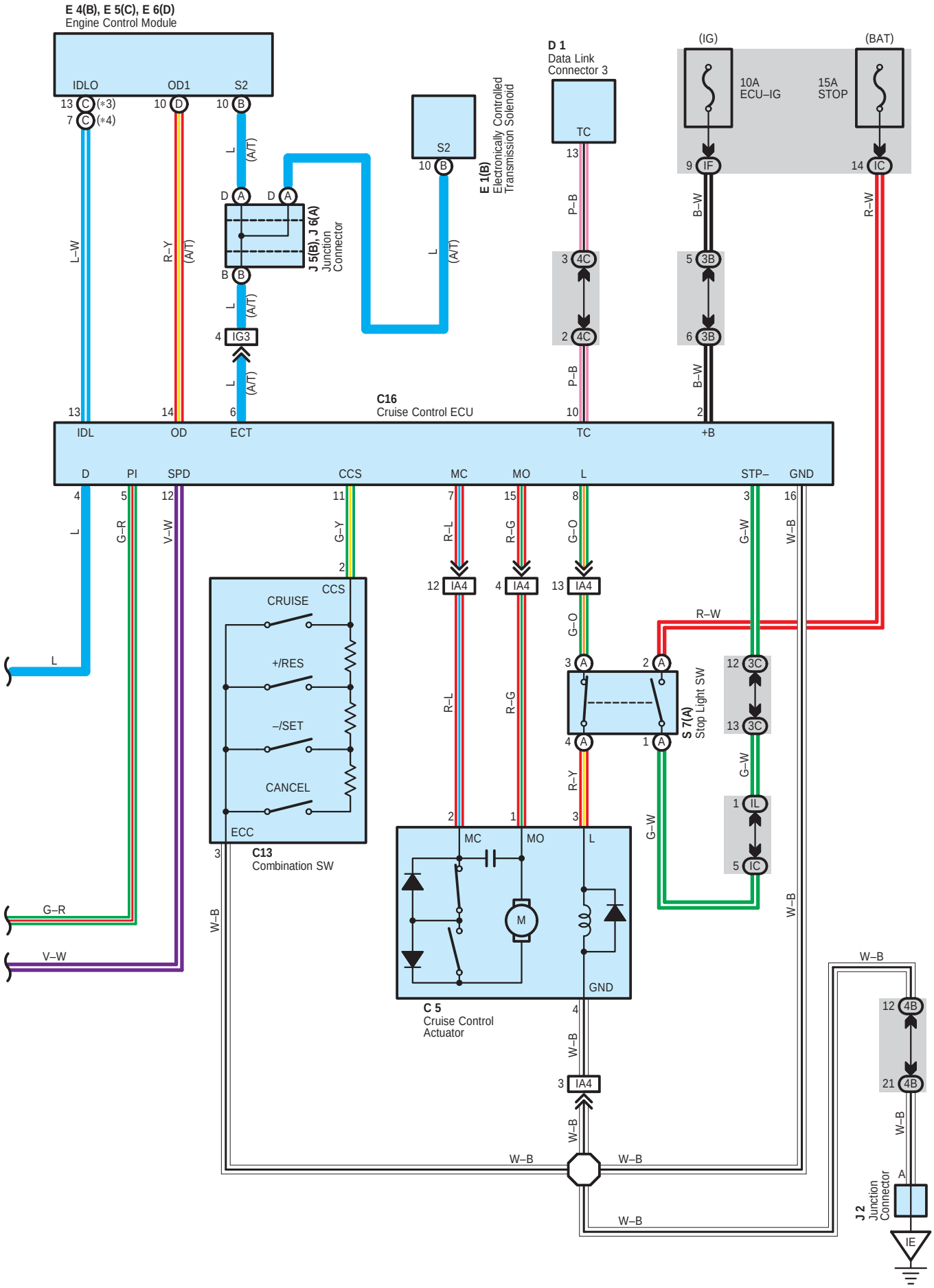
E 4(B), E 5(C), E 6(D)
Engine Control Module
IDLO
OD1
S2
13 C (*3)
7 C (*4)
10 D
10 B
L (A/T)
D A
D A
J 5(B), J 6(A)
Junction Connector
B B
L (A/T)
4 IG3
L (A/T)
L–W
R–Y (A/T)
S2
10 B
E 1(B)
Electronically Controlled Transmission Solenoid
L (A/T)
D 1
Data Link Connector 3
TC
13
P–B
3 4C
2 4C
P–B
(IG)
(BAT)
10A ECU–IG
15A STOP
9 IF
14 IC
B–W
5 3B
6 3B
B–W
R–W
C16
Cruise Control ECU
13 IDL
14 OD
6 ECT
10 TC
2 +B
D PI SPD CCS MC MO L STP– GND
4 L
5 G–R
12 V–W
11 G–Y
2
7 R–L
15 R–G
8 G–O
3 G–W
16 W–B
12 IA4
4 IA4
13 IA4
CCS
CRUISE
+/RES
–/SET
CANCEL
ECC
C13
Combination SW
3 W–B
L
G–R
V–W
R–L
R–G
G–O
R–W
3 A
2 A
4 A
1 A
S 7(A)
Stop Light SW
R–Y
12 3C
13 3C
G–W
1 IL
5 IC
G–W
2 MC
1 MO
3 L
M
GND
C 5
Cruise Control Actuator
4
W–B
3 IA4
W–B
W–B
W–B
W–B
W–B
12 4B
21 4B
W–B
A
J 2
Junction Connector
IE

System Outline

The current is applied at all times through the STOP fuse to TERMINAL (A) 2 of the stop light SW.
With the ignition SW turned to on, the current flows through the MAIN fuse to AM2 fuse to ignition SW (IG2) to TERMINAL 2 of the combination meter and the current through the ECU–IG fuse flows to TERMINAL 2 of the cruise control ECU.
When the ignition SW is on and the CRUISE SW is turned on, a signal is input from TERMINAL 2 of the cruise control SW to TERMINAL 11 of the cruise control ECU. As a result, the cruise control ECU functions and the current flows from the ECU–IG fuse to TERMINAL 2 of the cruise control ECU to TERMINAL 16 of the cruise control ECU to GROUND, and the cruise control system is in a condition ready for operation.
At the same time, the current through the MAIN fuse flows to AM2 fuse to ignition SW (IG2) to TERMINAL 2 of the CRUISE indicator light to TERMINAL 14 to TERMINAL 5 of the cruise control ECU to TERMINAL 16 to GROUND, causing the CRUISE indicator light to light up, indicating that cruise control is ready for operation.

1. Set Operation

When the CRUISE SW is turned on and the SET SW is pushed with the vehicle speed within the set limit (Approx. 40 km/h, 25 mph to 200 km/h, 124 mph), a signal is input to TERMINAL 11 of the cruise control ECU, and the vehicle speed at the time the SET SW is released is memorized in the ECU as the set speed.

2. Set Speed Control

During cruise control driving, the ECU compares the set speed memorized in the ECU with the actual vehicle speed input into TERMINAL 12 of the cruise control ECU from the combination meter, and controls the cruise control actuator to maintain the set speed.
When the actual speed is lower than the set speed, the ECU causes the current to the cruise control actuator to flow from TERMINAL 15 of the cruise control ECU to TERMINAL 1 of the cruise control actuator to TERMINAL 2 to TERMINAL 7 of the cruise control ECU. As a result, the motor in the cruise control actuator is rotated to open the throttle valve and the throttle cable is pulled to increase the vehicle speed. When the actual driving speed is higher than the set speed, the current to the cruise control actuator flows from TERMINAL 7 of the ECU to TERMINAL 2 of the cruise control actuator to TERMINAL 1 to TERMINAL 15 of the cruise control ECU.
This causes the motor in the cruise control actuator to rotate to close the throttle valve and return the throttle cable to decrease the vehicle speed.

3. Coast Control

During cruise control driving, while the –/SET SW is on, the cruise control actuator returns the throttle cable to close the throttle valve and decrease the driving speed. The vehicle speed when the –/SET SW is turned off is memorized, and the vehicle continues at the new set speed.

4. Accel Control

During cruise control driving, while the +/RES SW is turned on, the cruise control actuator pulls the throttle cable to open the throttle valve and increase the driving speed.
The vehicle speed when the +/RES SW is turned off is memorized and the vehicle continues at the new set speed.

5. Resume Control

The set speed is maintained even after the vehicle speed drops down to approx. 40 km/h (25 mph) or less. Therefore the resume control will be effective when the vehicle speed reaches back to approx. 40 km/h (25 mph). After canceling the set speed by the CANCEL SW, pushing the +/RES SW will cause the vehicle to resume the speed set before cancellation.

6. Manual Cancel Mechanism

If any of the following operations occurs during cruise control operation, the magnetic clutch of the actuator turns off and the motor rotates to close the throttle valve and the cruise control is released.

* Placing the shift lever to positions except ”D” position (Park/Neutral position SW except ”D” position)(A/T), depressing the clutch pedal (Cruise control clutch SW off)(M/T). ”Signal is not input to TERMINAL 4 of the ECU”
* Depressing the brake pedal (Stop light SW on). ”Signal input to TERMINAL 3 of the ECU”
* Pushing the CANCEL SW (CANCEL SW on). ”Signal input to TERMINAL 11 of the ECU”
* Pushing the CRUISE SW off ”signal input to TERMINAL 11 of the ECU”.

7. Tap–Up Control Function

When the difference between the actual vehicle speed and the set speed is less than 5 km/h (3 mph), the set speed can be increased 1.6 km/h (1 mph) each time by operating the +/RES SW quickly within 0.6 seconds.

8. Tap–Down Control Function

When the difference between the actual vehicle speed and the set speed is less than 5 km/h (3 mph), the set speed can be lowered 1.6 km/h (1 mph) each time by operating the –/SET SW quickly within 0.6 seconds.

9. Auto Cancel Function

A) If any of the following operating conditions occurs during cruise control operation, the set speed is erased, current flow to the magnetic clutch is stopped and the cruise control is released, (CRUISE SW turns off).
When this occurs, the ignition SW must be turned off once before the CRUISE SW will turn on.

∗ When current continues to flow to the motor inside the actuator in the throttle valve ”OPEN” direction.
∗ The motor does not operate despite the motor drive signal being output.

B) If any of the following operating conditions occurs during cruise control operation, the set speed is erased, current flow to the magnetic clutch is stopped and the cruise control is released. (CRUISE SW turn off).
When this occurs, the cancel state is cleared as the CRUISE SW will turn on again.

∗ Over current to transistor driving the motor or the magnetic clutch.
∗ Open circuit in the magnetic clutch.
∗ Momentary interruption of vehicle speed signal.
∗ Short circuit in the cruise control SW.
∗ Short circuit of the ground when the control SW is turned ON.

C) If the following condition occurs during cruise control operation, the set speed is erased and the cruise control is released. (The power to the magnetic clutch is cut off until the SET SW is ”ON” again.)

∗ When the power to the cruise system is momentarily cut off.

D) If the following condition occurs during cruise control operation, the cruise control is released. (The power to the magnetic clutch is cut off until the SET SW is ”ON” again.)

∗ When the vehicle speed falls below the minimum speed limit, approx. 40 km/h (25 mph).

10. Automatic Transaxle Control Function (A/T)

∗ In overdrive. If the vehicle speed becomes lower than the overdrive cut speed (Set speed minus approx. 4 km/h, 2.5 mph) during cruise control operation, such as driving up a hill, the overdrive is released and the power is increased to prevent a reduction in vehicle speed.
∗ After releasing the overdrive, if the vehicle speed becomes higher than the overdrive return speed (Set speed minus approx. 2 km/h, 1.2 mph) and the ECU judges by the signals from the actuator’s potentiometer that the upward slope has finished, the overdrive is resumed after approximately 2 seconds.
∗ During cruise control driving, the cruise control operation signal is output from the cruise control ECU to the engine control module. Upon receiving this signal, the engine control module changes the shift pattern to normal.
To maintain smooth cruise control operation (on a downward slope etc.), the lock–up release of the transaxle when the idling point of the throttle position is ”ON” is forbidden.

○ : Parts Location

Code	See Page	Code	See Page	Code	See Page
C5	34 (2ZZ–GE)	E4 B	38	J6 A	39
	36 (1ZZ–FE)	E5 C	38	P1	37 (1ZZ–FE)
C11	38	E6 D	38	S1 A	37 (1ZZ–FE)
C13	38	I11	39	S1 B	35 (2ZZ–GE)
C15	38	J2	39	S1 B	37 (1ZZ–FE)
C16	38	J3 A	39	S7 A	39
D1	38	J4 B	39	V1	37 (1ZZ–FE)
E1 B	36 (1ZZ–FE)	J5 B	39		

⬭ : Relay Blocks

Code	See Page	Relay Blocks (Relay Block Location)
1	23	Engine Room R/B (Engine Compartment Left)

: **Junction Block and Wire Harness Connector**

Code	See Page	Junction Block and Wire Harness (Connector Location)
IC	25	Engine Room Main Wire and Instrument Panel J/B (Lower Finish Panel)
IF	25	Instrument Panel Wire and Instrument Panel J/B (Lower Finish Panel)
IG		
IK	24	
IL		
IM		
1A	23	Engine Wire and Engine Room J/B (Engine Compartment Left)
3B	29	Instrument Panel Wire and RH J/B (Right Side of the Instrument Panel Reinforcement)
3C		
4B	32	Instrument Panel Wire and Center J/B (Behind the Combination Meter)
4C		

: **Connector Joining Wire Harness and Wire Harness**

Code	See Page	Joining Wire Harness and Wire Harness (Connector Location)
IA4	44	Engine Room Main Wire and Instrument Panel Wire (Instrument Panel Reinforcement LH)
IA5		
IA6		
IG1	45	Engine Wire and Instrument Panel Wire (Blower Unit RH)
IG3		

: **Ground Points**

Code	See Page	Ground Points Location
EC	42 (2ZZ–GE)	Left Side of the Cylinder Head
	43 (1ZZ–FE)	
IE	44	Behind Combination Meter

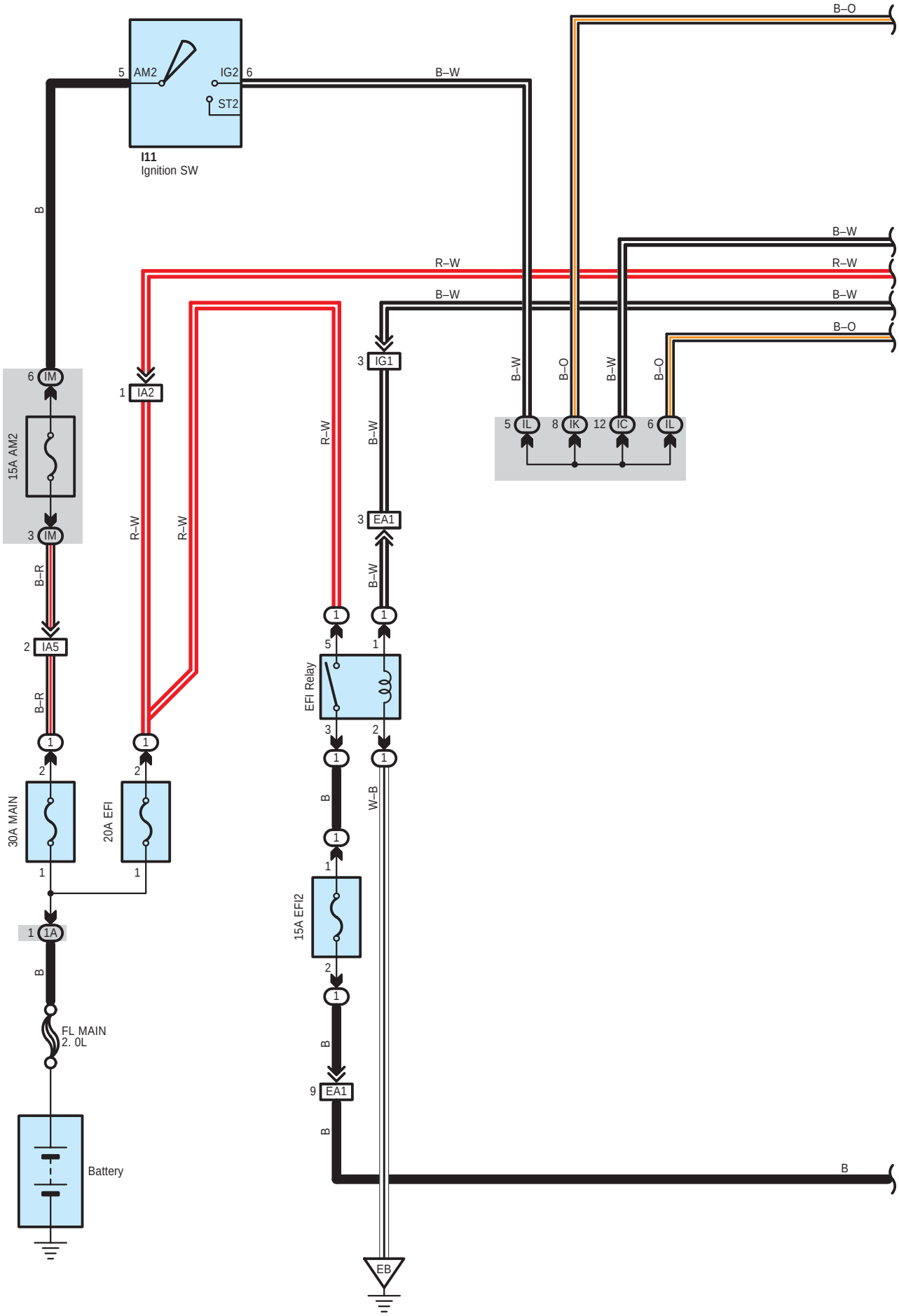
B–O
5 AM2
IG2 6
ST2
B–W
I11
Ignition SW
B
B–W
R–W
R–W
B–W
B–W
B–O
6 IM
1 IA2
3 IG1
B–W
B–O
B–W
B–O
5 IL
8 IK
12 IC
6 IL
15A AM2
R–W
B–W
3 IM
R–W
R–W
3 EA1
B–R
B–W
2 IA5
1
1
5
1
EFI Relay
B–R
1
1
3
2
1
1
2
2
B
W–B
30A MAIN
20A EFI
1
1
1
1A
15A EFI2
B
2
1
FL MAIN
2. 0L
B
9 EA1
B
Battery
B
EB

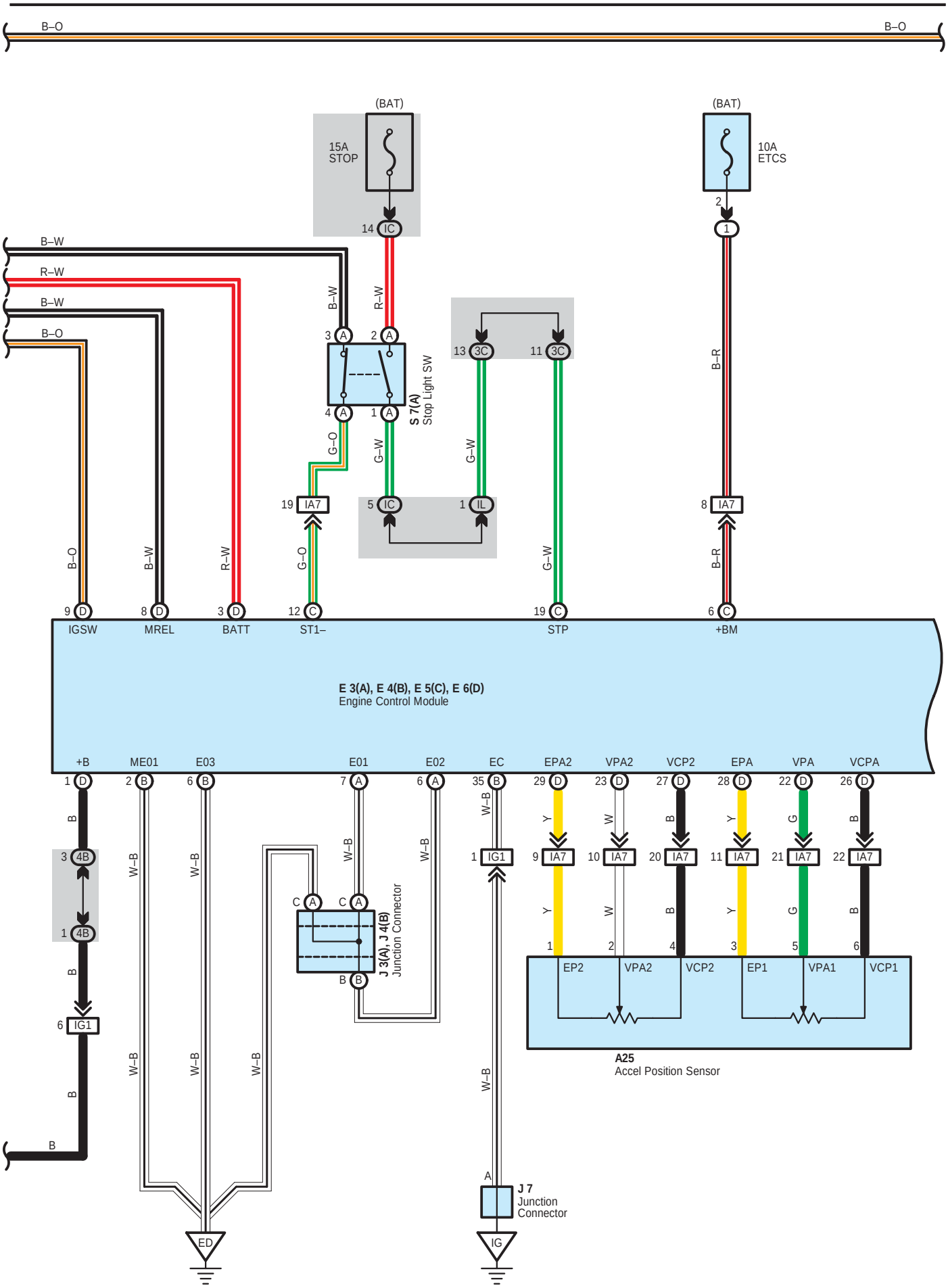
B–O
B–O
(BAT)
15A
STOP
14 IC
(BAT)
10A
ETCS
2
1
B–W
R–W
B–W
B–O
B–W
R–W
3 A
2 A
13 3C
11 3C
B–R
4 A
1 A
S 7(A)
Stop Light SW
G–O
G–W
G–W
19 IA7
5 IC
1 IL
8 IA7
B–O
B–W
R–W
G–O
G–W
B–R
9 D
8 D
3 D
12 C
19 C
6 C
IGSW
MREL
BATT
ST1–
STP
+BM
E 3(A), E 4(B), E 5(C), E 6(D)
Engine Control Module
+B
ME01
E03
E01
E02
EC
EPA2
VPA2
VCP2
EPA
VPA
VCPA
1 D
2 B
6 B
7 A
6 A
35 B
29 D
23 D
27 D
28 D
22 D
26 D
W–B
Y
W
B
Y
G
B
B
3 4B
1 4B
W–B
W–B
W–B
W–B
1 IG1
9 IA7
10 IA7
20 IA7
11 IA7
21 IA7
22 IA7
Y
W
B
Y
G
B
C A
C A
B B
J 3(A), J 4(B)
Junction Connector
1
2
4
3
5
6
EP2
VPA2
VCP2
EP1
VPA1
VCP1
6 IG1
A25
Accel Position Sensor
B
W–B
W–B
W–B
W–B
B
A
J 7
Junction
Connector
ED
IG

Cruise Control for 1ZZ–FE (2WD)

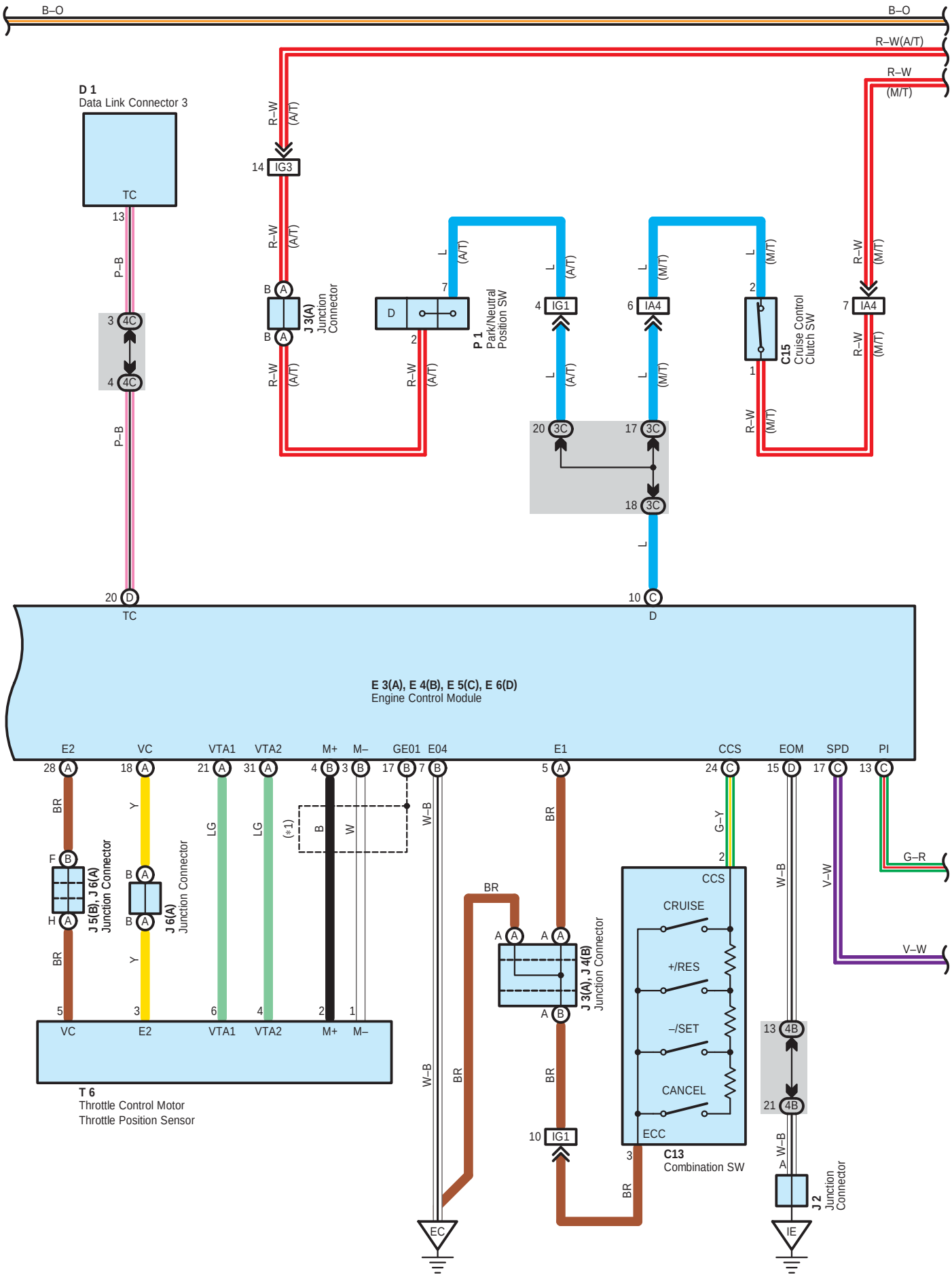

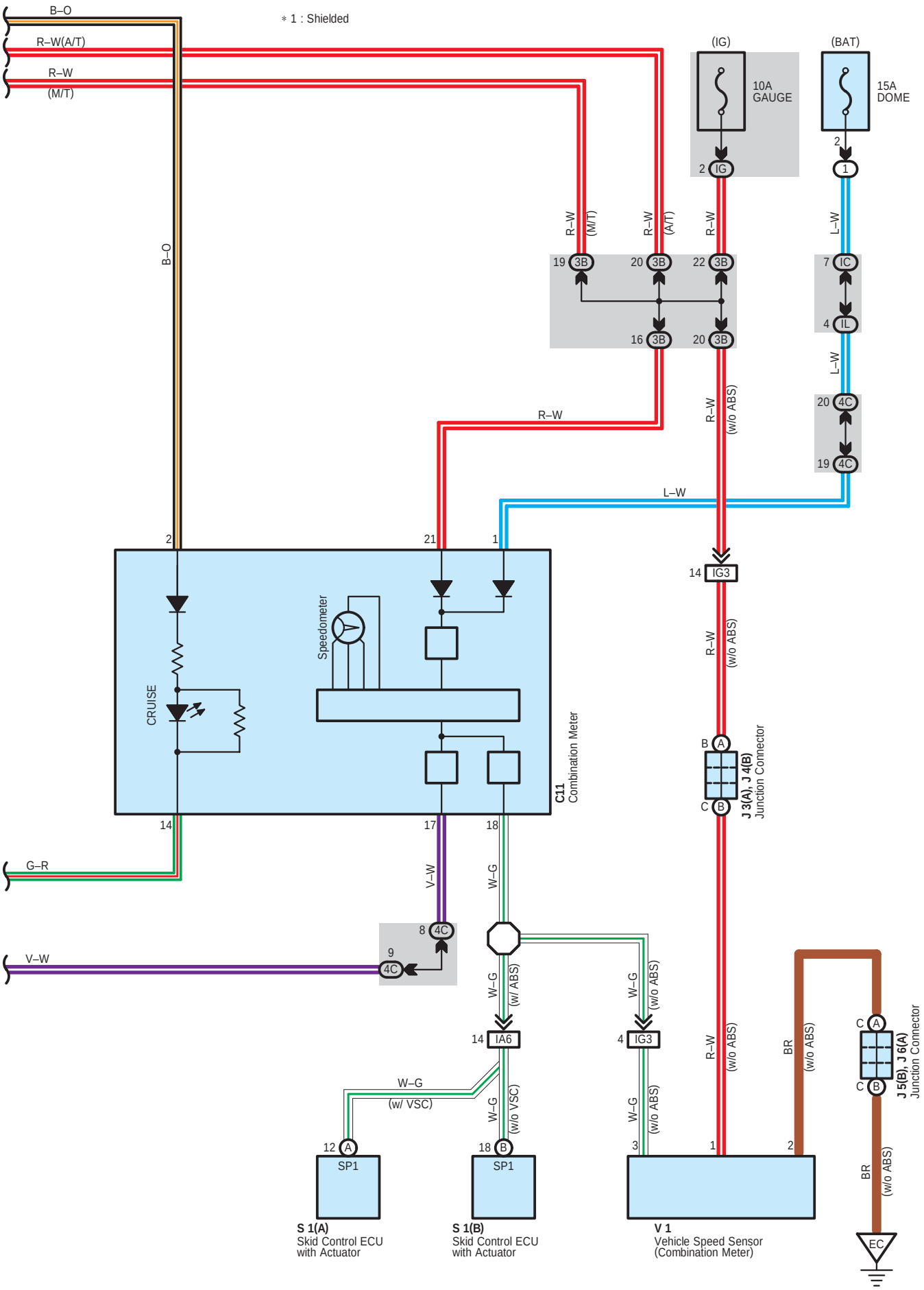
B–O
R–W(A/T)
R–W
(M/T)
* 1 : Shielded
(IG)
(BAT)
10A
GAUGE
15A
DOME
2
IG
1
R–W
(M/T)
R–W
(A/T)
R–W
L–W
19
3B
20
3B
22
3B
7
IC
16
3B
20
3B
4
IL
L–W
R–W
R–W
(w/o ABS)
20
4C
19
4C
L–W
2
21
1
14
IG3
Speedometer
CRUISE
R–W
(w/o ABS)
C11
Combination Meter
B
A
C
B
J 3(A), J 4(B)
Junction Connector
14
17
18
G–R
V–W
W–G
8
4C
9
4C
V–W
W–G
(w/ ABS)
W–G
(w/o ABS)
14
IA6
4
IG3
R–W
(w/o ABS)
BR
(w/o ABS)
C
A
C
B
J 5(B), J 6(A)
Junction Connector
W–G
(w/ VSC)
W–G
(w/o VSC)
W–G
(w/o ABS)
12
A
SP1
18
B
SP1
3
1
2
BR
(w/o ABS)
EC
S 1(A)
Skid Control ECU
with Actuator
S 1(B)
Skid Control ECU
with Actuator
V 1
Vehicle Speed Sensor
(Combination Meter)

System Outline

The cruise control system is a constant vehicle speed controller in which control of the switch on the instrument panel makes it possible to automatically adjust the opening of the engine throttle valve without depressing of the accel pedal.

1. Set Operation

When the cruise control main SW is turned on, the system starts preparations necessary for the cruise control and turns on the indicator light in the combination meter.

2. Set Speed Control

When the –/SET SW is operated with the cruise control main SW turned on during travelling, the constant vehicle speed is controlled.

3. Coast Control

When the –/SET SW is kept turned on during cruise control travelling, the engine control module controls the throttle valve to decelerate the vehicle. Every time the –/SET SW is turned on instantaneously, the vehicle speed is decelerated approximately 1.6 km/h.

4. Accel Control

When the +/RES SW is kept turned on during cruise control travelling, the engine control module controls the throttle valve to accelerate the vehicle. Every time the +/RES SW is turned on instantaneously, the vehicle speed is accelerated approximately 1.6 km/h.

5. Resume Control

If the cruise control is cancelled, use of the +/RES SW accelerates the vehicle to the speed level used before canceling the cruise control.

6. Manual Cancel Mechanism

If any of the following signals is input during cruise control travelling, the cruise control is cancelled.

* The stop light SW is turned on.
* The CANCEL SW is turned on.
* The cruise control main SW is turned off.

7. Auto Cancel Function

If any of the following conditions is encountered, the cruise control is automatically cancelled.

* The stop light SW wiring is faulty or short–circuited.
* The vehicle speed signal is faulty.
* The electronically controlled throttle malfunctions.

8. Overdrive Control Function

The overdrive control may be cancelled if the vehicle travels on the slope during cruise control travelling. After the overdrive control has been cancelled it is decided that the slope is finished, the vehicle returns to the overdrive control mode again.

: Parts Location

Code		See Page	Code		See Page	Code		See Page
A25		38	E6	D	38	P1		37 (1ZZ–FE)
C11		38	I11		39	S1	A	37 (1ZZ–FE)
C13		38	J2		39		B	37 (1ZZ–FE)
C15		38	J3	A	39	S7	A	39
D1		38	J4	B	39	T6		37 (1ZZ–FE)
E3	A	38	J5	B	39	V1		37 (1ZZ–FE)
E4	B	38	J6	A	39			
E5	C	38	J7		39			

: Relay Blocks

Code	See Page	Relay Blocks (Relay Block Location)
1	23	Engine Room R/B (Engine Compartment Left)

: **Junction Block and Wire Harness Connector**

Code	See Page	Junction Block and Wire Harness (Connector Location)
IC	25	Engine Room Main Wire and Instrument Panel J/B (Lower Finish Panel)
IG	25	Instrument Panel Wire and Instrument Panel J/B (Lower Finish Panel)
IK	24	
IL		
IM		
1A	23	Engine Wire and Engine Room J/B (Engine Compartment Left)
3B	29	Instrument Panel Wire and RH J/B (Right Side of the Instrument Panel Reinforcement)
3C		
4B	32	Instrument Panel Wire and Center J/B (Behind the Combination Meter)
4C		

: **Connector Joining Wire Harness and Wire Harness**

Code	See Page	Joining Wire Harness and Wire Harness (Connector Location)
EA1	43 (1ZZ–FE)	Engine Wire and Engine Room Main Wire (Inside of the Engine Room R/B)
IA2	44	Engine Room Main Wire and Instrument Panel Wire (Instrument Panel Reinforcement LH)
IA4		
IA5		
IA6		
IA7		
IG1	45	Engine Wire and Instrument Panel Wire (Blower Unit RH)
IG3		

: **Ground Points**

Code	See Page	Ground Points Location
EB	43 (1ZZ–FE)	Front Left Suspension Tower
EC	43 (1ZZ–FE)	Left Side of the Cylinder Head
ED		
IE	44	Behind Combination Meter
IG	44	Right Kick Panel

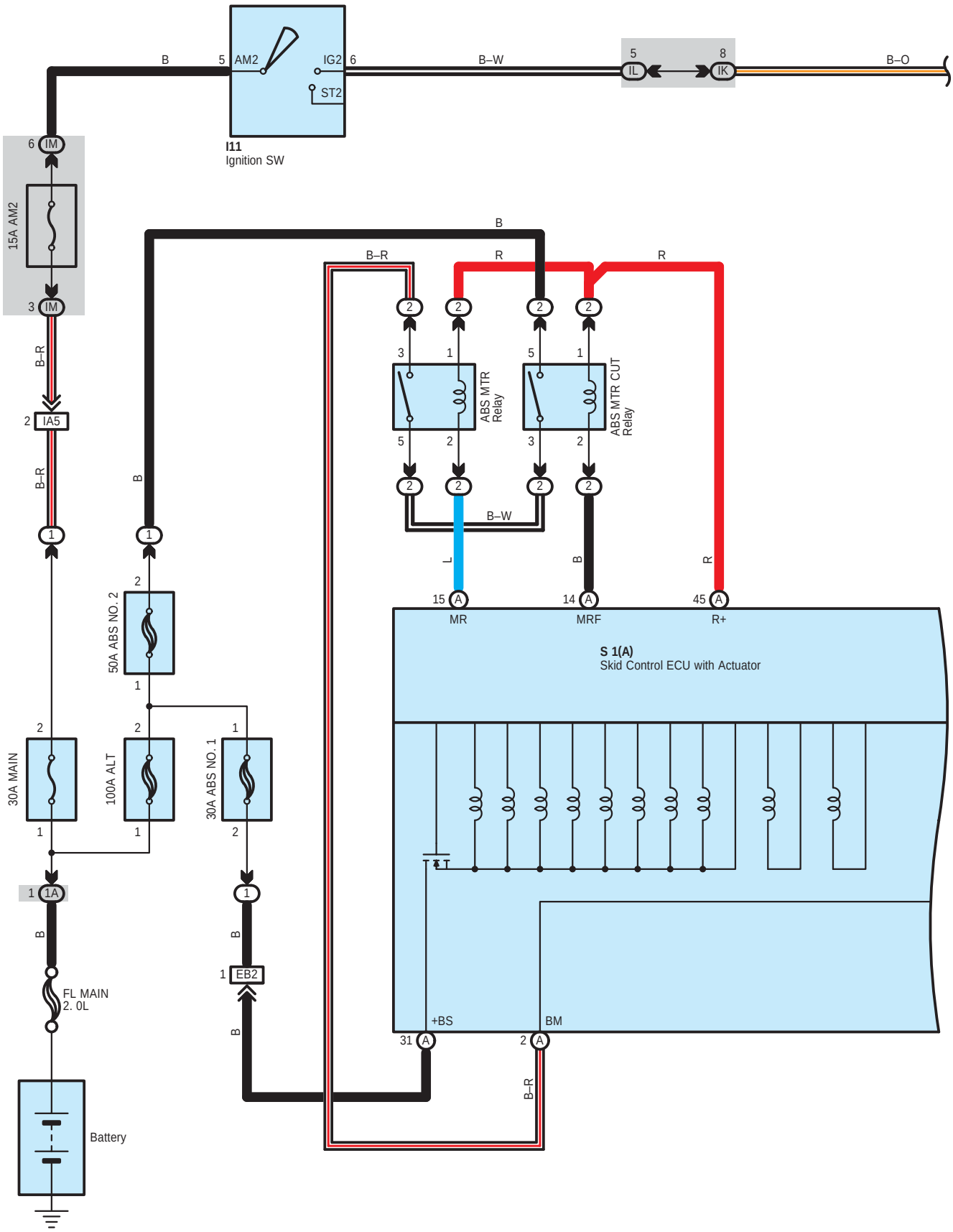
I11
Ignition SW
AM2
IG2
ST2
IL
IK
B
B–W
B–O
15A AM2
IM
IA5
B–R
50A ABS NO. 2
30A MAIN
100A ALT
30A ABS NO. 1
1A
EB2
FL MAIN
2. 0L
Battery
ABS MTR Relay
ABS MTR CUT Relay
R
L
MR
MRF
R+
S 1(A)
Skid Control ECU with Actuator
+BS
BM

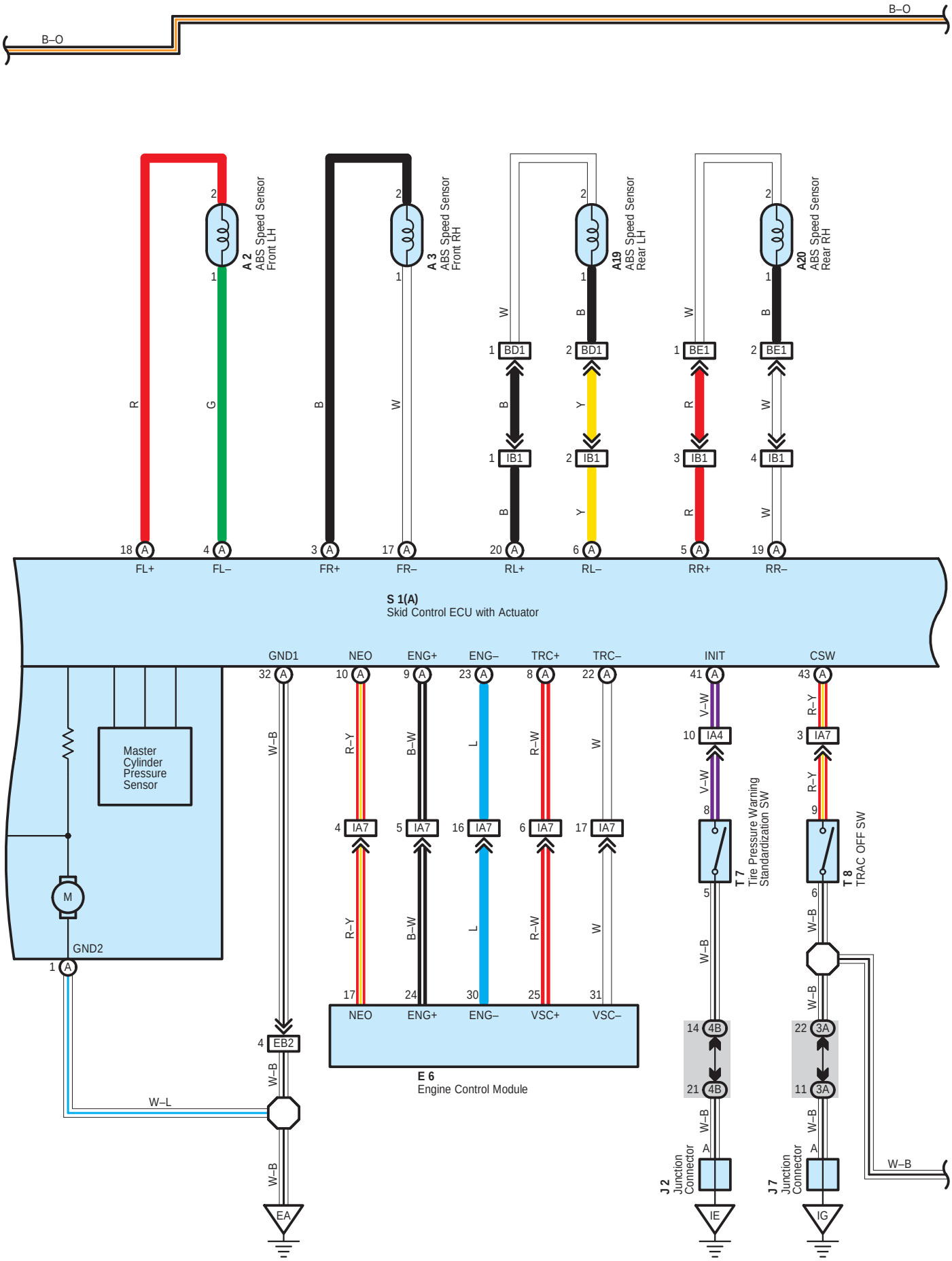
B–O
B–O
A 2
ABS Speed Sensor
Front LH
A 3
ABS Speed Sensor
Front RH
A19
ABS Speed Sensor
Rear LH
A20
ABS Speed Sensor
Rear RH
BD1
BE1
IB1
FL+
FL–
FR+
FR–
RL+
RL–
RR+
RR–
S 1(A)
Skid Control ECU with Actuator
GND1
NEO
ENG+
ENG–
TRC+
TRC–
INIT
CSW
Master
Cylinder
Pressure
Sensor
GND2
IA7
IA4
T 7
Tire Pressure Warning
Standardization SW
T 8
TRAC OFF SW
EB2
W–L
E 6
Engine Control Module
NEO
ENG+
ENG–
VSC+
VSC–
J 2
Junction
Connector
J 7
Junction
Connector
EA
IE
IG

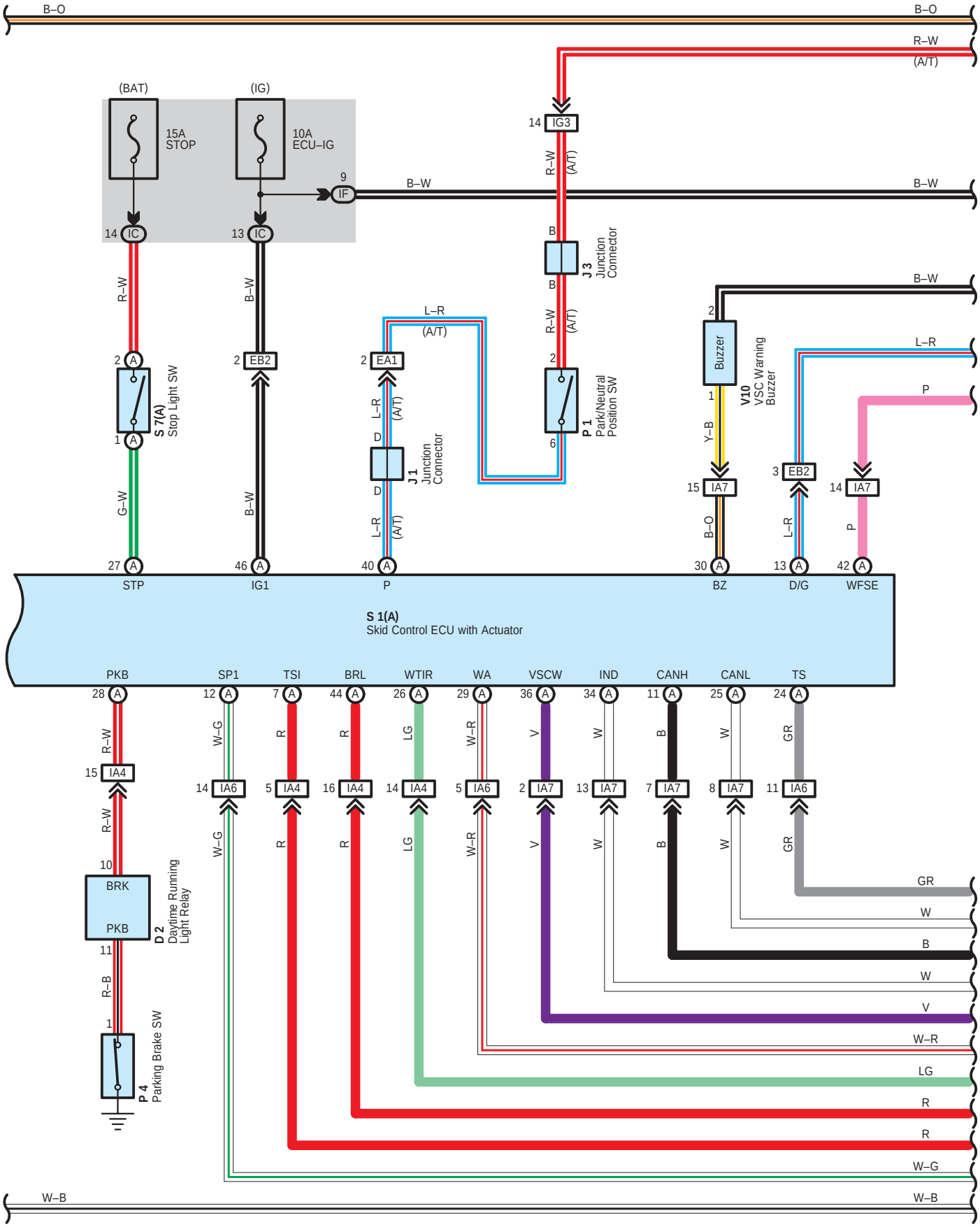
B–O
R–W
(A/T)
(BAT)
(IG)
15A
STOP
10A
ECU–IG
9
IF
B–W
14 IG3
14 IC
13 IC
R–W
B–W
B
J 3
Junction
Connector
L–R
(A/T)
2 EB2
2 EA1
S 7(A)
Stop Light SW
G–W
D
J 1
Junction
Connector
2
Buzzer
V10
VSC Warning
Buzzer
Y–B
P 1
Park/Neutral
Position SW
6
15 IA7
B–O
3 EB2
14 IA7
P
27 A
STP
46 A
IG1
40 A
P
30 A
BZ
13 A
D/G
42 A
WFSE
S 1(A)
Skid Control ECU with Actuator
PKB
SP1
TSI
BRL
WTIR
WA
VSCW
IND
CANH
CANL
TS
28 A
12 A
7 A
44 A
26 A
29 A
36 A
34 A
11 A
25 A
24 A
W–G
R
LG
W–R
V
W
B
GR
15 IA4
14 IA6
5 IA4
16 IA4
14 IA4
5 IA6
2 IA7
13 IA7
7 IA7
8 IA7
11 IA6
10
BRK
PKB
D 2
Daytime Running
Light Relay
11
R–B
1
P 4
Parking Brake SW
W–B

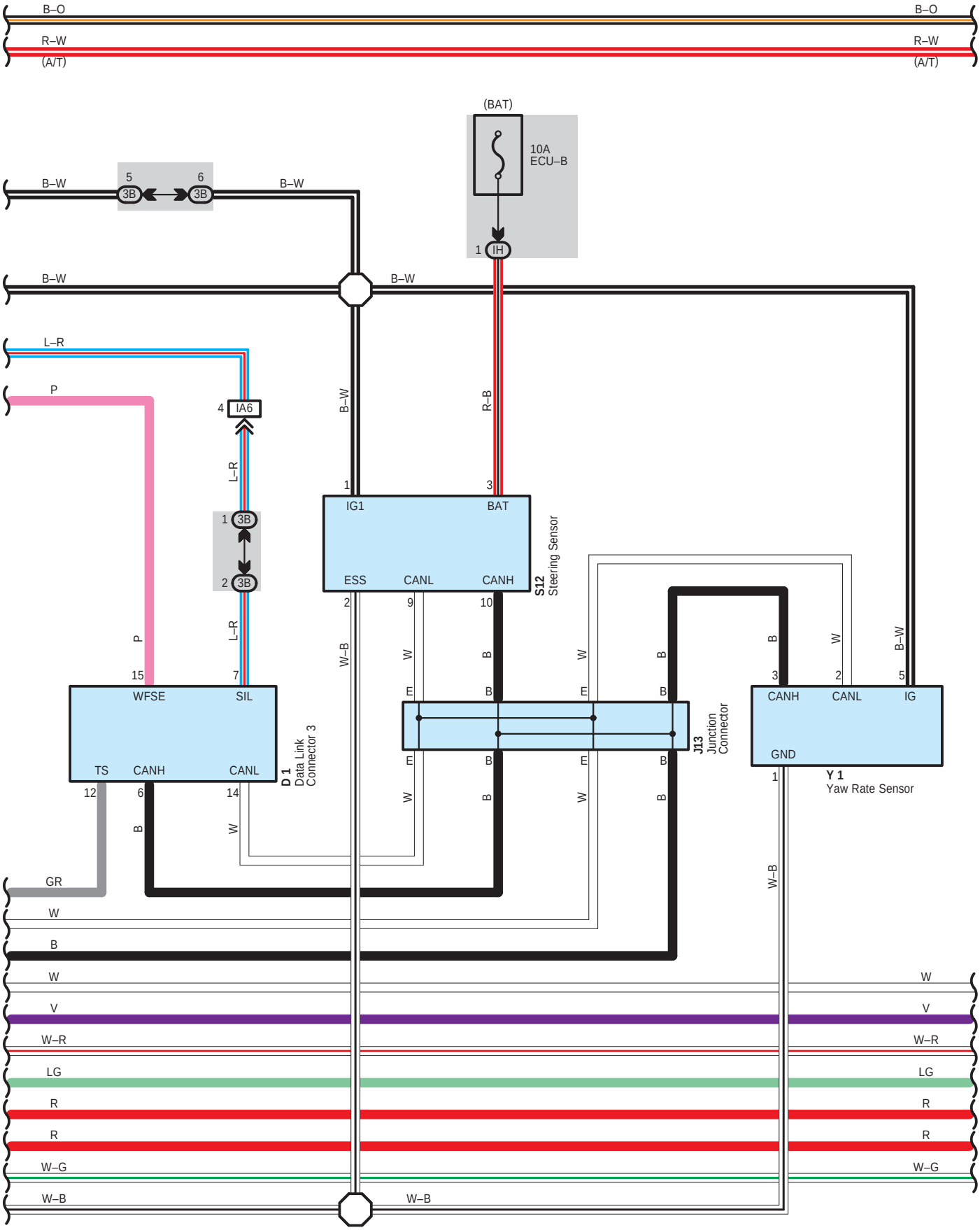
B–O
R–W
(A/T)
(BAT)
10A
ECU–B
1 IH
B–W
5 3B
6 3B
L–R
P
4 IA6
1 3B
2 3B
IG1
BAT
ESS
CANL
CANH
S12
Steering Sensor
WFSE
SIL
TS
D 1
Data Link
Connector 3
J13
Junction
Connector
CANH
CANL
IG
GND
Y 1
Yaw Rate Sensor
GR
W
B
V
W–R
LG
R
W–G
W–B

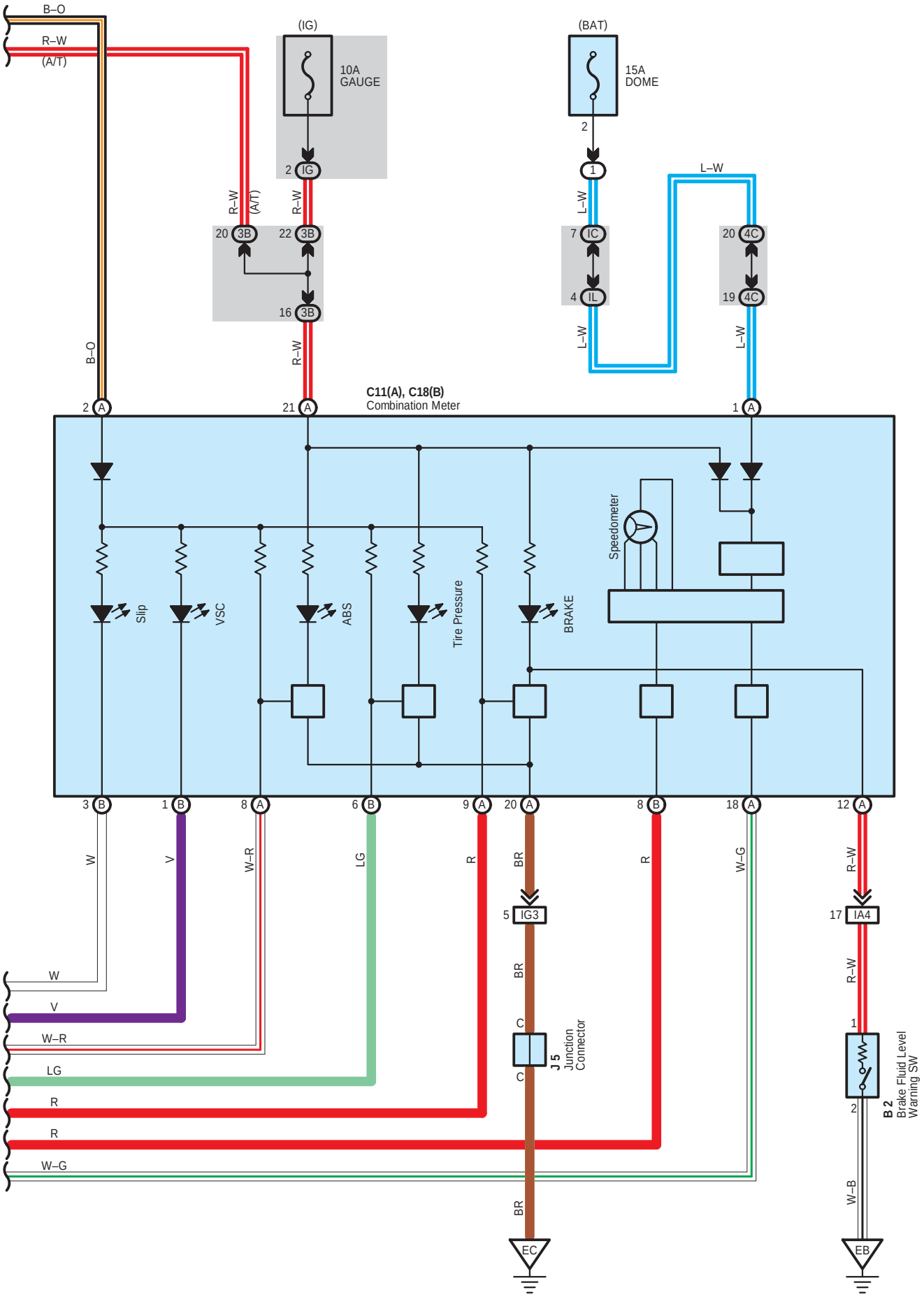
B–O
R–W
(A/T)
(IG)
10A
GAUGE
(BAT)
15A
DOME
2
1
L–W
2 IG
R–W
R–W
(A/T)
20 3B
22 3B
16 3B
7 IC
4 IL
20 4C
19 4C
B–O
R–W
L–W
L–W
L–W
C11(A), C18(B)
Combination Meter
2 A
21 A
1 A
Speedometer
Slip
VSC
ABS
Tire Pressure
BRAKE
3 B
1 B
8 A
6 B
9 A
20 A
8 B
18 A
12 A
W
V
W–R
LG
R
BR
R
W–G
R–W
5 IG3
17 IA4
BR
R–W
C
C
J 5
Junction
Connector
1
2
B 2
Brake Fluid Level
Warning SW
W
V
W–R
LG
R
R
W–G
W–B
BR
EC
EB

System Outline

The vehicle could be in an extreme over steering or under steering tendency due to unexpected accidents, road conditions, vehicle speed, or by other external factors. In such a case, this system automatically controls the engine output and the braking to each wheel, to decrease the extreme over steering and under steering.

∗ To decrease extreme over steering tendency

When the system determines that the over steering tendency is large, the system applies brakes to the outer wheels according to the degree of over steering, and crates a moment towards the outer side of the vehicle, to decrease the tendency of over steering. Also, when the brakes are applied, the vehicle speed decreases while the stability increases.

∗ To decrease extreme under steering tendency

When the system determines that the under steering tendency is large, the system applies brakes to the front or rear wheels according to the degree of under steering, to decrease the tendency of under steering.

∗ TRAC OFF SW

TRAC OFF SW is only for two–wheel drive models. Four–wheel drive models is needless this SW.

The SW to send the traction control system into OFF mode. When the SW is pushed after starting the engine, the system will be in OFF mode, and the TRAC OFF indicator light will turn on. When the SW is pushed again, the system will be in standby mode. When the engine is stopped and re–started, regardless of the TRAC OFF SW, the system will be in standby mode.

Information to the driver

The VSC system informs the driver when the tire grip is about to exceed its grip capacity, by blinking the slip indicator light and emiting an intermittent sound of the buzzer. Accordingly, the driver is informed to drive more gently.

: Parts Location

Code	See Page	Code	See Page	Code	See Page
A2	36 (1ZZ–FE)	E6	38	P4	39
A3	36 (1ZZ–FE)	I11	39	S1 A	37 (1ZZ–FE)
A19	40	J1	37 (1ZZ–FE)	S7 A	39
A20	40	J2	39	S12	39
B2	36 (1ZZ–FE)	J3	39	T7	39
C11 A	38	J5	39	T8	39
C18 B	38	J7	39	V10	39
D1	38	J13	39	Y1	39
D2	38	P1	37 (1ZZ–FE)		

: Relay Blocks

Code	See Page	Relay Blocks (Relay Block Location)
1	23	Engine Room R/B (Engine Compartment Left)
2	31	ABS R/B (Near the Front Left Suspension Tower)

: Junction Block and Wire Harness Connector

Code	See Page	Junction Block and Wire Harness (Connector Location)
IC	25	Engine Room Main Wire and Instrument Panel J/B (Lower Finish Panel)
IF	25	Instrument Panel Wire and Instrument Panel J/B (Lower Finish Panel)
IG		
IH		
IK	24	
IL		
IM		
1A	23	Engine Wire and Engine Room J/B (Engine Compartment Left)
3A	29	Instrument Panel Wire and RH J/B (Right Side of the Instrument Panel Reinforcement)
3B		
4B	32	Instrument Panel Wire and Center J/B (Behind the Combination Meter)
4C		

: Connector Joining Wire Harness and Wire Harness

Code	See Page	Joining Wire Harness and Wire Harness (Connector Location)
EA1	43 (1ZZ–FE)	Engine Wire and Engine Room Main Wire (Inside of the Engine Room R/B)
EB2	43 (1ZZ–FE)	Engine Room Main Wire and Engine Room Main Wire (Front Right Suspension Tower)
IA4	44	Engine Room Main Wire and Instrument Panel Wire (Instrument Panel Reinforcement LH)
IA5		
IA6		
IA7		
IB1	44	Engine Room Main Wire and Floor Wire (Cowl Side Panel LH)
IG3	45	Engine Wire and Instrument Panel Wire (Blower Unit RH)
BD1	46	Skid Control Sensor Wire LH and Floor Wire (Quarter Wheel House LH)
BE1	46	Skid Control Sensor Wire RH and Floor Wire (Quarter Wheel House RH)

: Ground Points

Code	See Page	Ground Points Location
EA	43 (1ZZ–FE)	Front Right Fender
EB	43 (1ZZ–FE)	Front Left Suspension Tower
EC	43 (1ZZ–FE)	Left Side of the Cylinder Head
IE	44	Behind Combination Meter
IG	44	Right Kick Panel

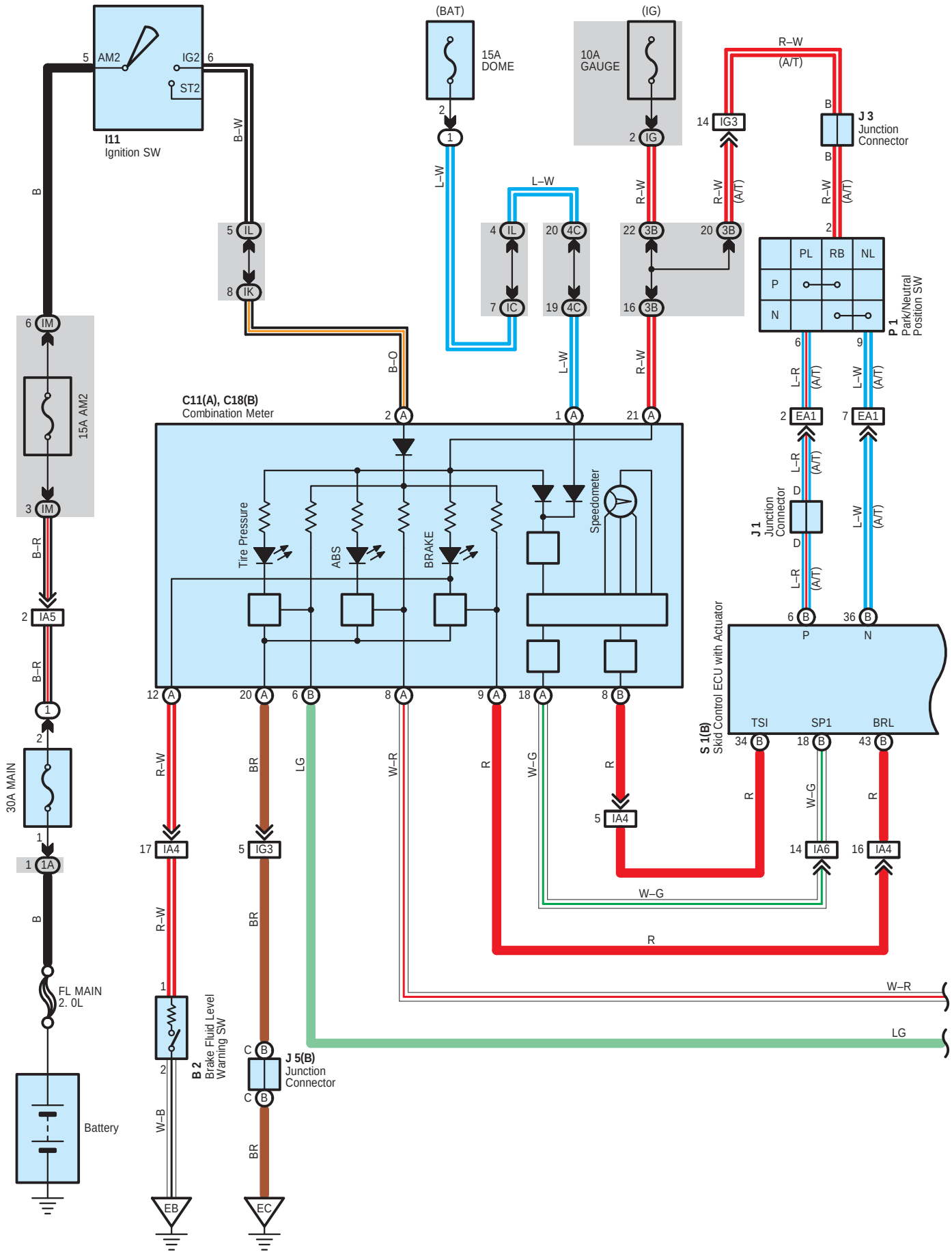
I11
Ignition SW
AM2
IG2
ST2
(BAT)
15A
DOME
(IG)
10A
GAUGE
J 3
Junction
Connector
P 1
Park/Neutral
Position SW
PL
RB
NL
P
N
15A AM2
30A MAIN
FL MAIN
2. 0L
Battery
C11(A), C18(B)
Combination Meter
Tire Pressure
ABS
BRAKE
Speedometer
J 1
Junction
Connector
S 1(B)
Skid Control ECU with Actuator
TSI
SP1
BRL
B 2
Brake Fluid Level
Warning SW
J 5(B)
Junction
Connector
EB
EC
R–W
(A/T)
L–W
B–W
B–O
B–R
B
BR
LG
W–R
R
W–G
W–B

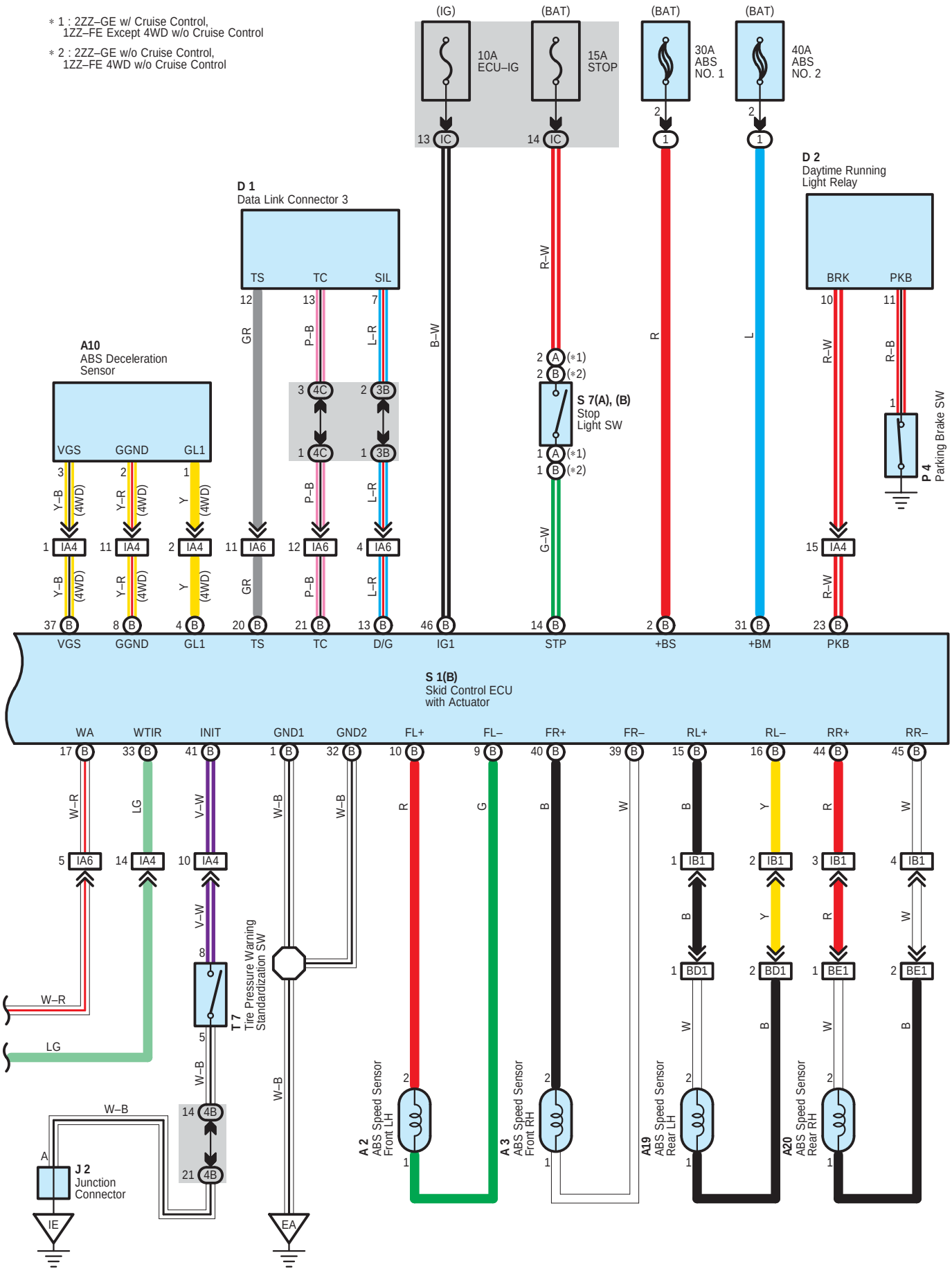
* 1 : 2ZZ–GE w/ Cruise Control,
1ZZ–FE Except 4WD w/o Cruise Control
* 2 : 2ZZ–GE w/o Cruise Control,
1ZZ–FE 4WD w/o Cruise Control
(IG)
(BAT)
(BAT)
(BAT)
10A
ECU–IG
15A
STOP
30A
ABS
NO. 1
40A
ABS
NO. 2
D 1
Data Link Connector 3
TS
TC
SIL
D 2
Daytime Running
Light Relay
BRK
PKB
A10
ABS Deceleration
Sensor
VGS
GGND
GL1
S 7(A), (B)
Stop
Light SW
P 4
Parking Brake SW
S 1(B)
Skid Control ECU
with Actuator
WA
WTIR
INIT
GND1
GND2
FL+
FL–
FR+
FR–
RL+
RL–
RR+
RR–
T 7
Tire Pressure Warning
Standardization SW
A 2
ABS Speed Sensor
Front LH
A 3
ABS Speed Sensor
Front RH
A19
ABS Speed Sensor
Rear LH
A20
ABS Speed Sensor
Rear RH
J 2
Junction
Connector
IE
EA

System Outline

ABS is a brake system designed to improve the operating ability and securing the stability of the vehicle by preventing the lock–up of the vehicle by controlling the wheel cylinder pressure of all the four wheels at the time of sudden braking.

1. Input Signals

(1) Speed sensor signal

The speed of the wheels is detected and input to TERMINALS FL+, FR+, RL+, and RR+ of the skid control ECU with actuator.

(2) Stop light SW signal

A signal is input to TERMINAL STP of the skid control ECU with actuator when brake pedal is depressed.

2. System Operation

When the wheels are locked–up, the solenoid inside the actuator is controlled by the signal from the skid control ECU with actuator, and the brake fluid in the wheel cylinder will flow through the reservoir and reduce the hydraulic pressure.
While the ABS is in operation, as the skid control ECU with actuator always outputs the operation signal to the pump inside the actuator, and the brake fluid stored inside the reservoir will be sucked up by the pump inside the actuator and returned to the master cylinder.
When the hydraulic pressure of the wheel cylinder is decompressed or increased until the necessary hydraulic pressure, the solenoid inside the actuator is controlled by the control signal from the skid control ECU with actuator and as a result, hydraulic pressure of the wheel cylinder will be closed at both the master cylinder and reservoir sides routes, and the hydraulic pressure of the wheel cylinder will be in the hold condition.
If increase of the hydraulic pressure volume of the wheel cylinder becomes necessary, the control signals from the skid control ECU with actuator control the solenoid inside the actuator, to resume to the normal condition. Thus the brake fluid of the master cylinder will be sent to the wheel cylinder and will increase the hydraulic pressure of the wheel cylinder. At this time, in the case that the brake fluid is left in the reservoir, it will be sucked up by the pump inside the actuator and will be sent to the wheel cylinder.

: Parts Location

Code	See Page	Code		See Page	Code		See Page
A2	34 (2ZZ–GE)	C11	A	38	P1		37 (1ZZ–FE)
	36 (1ZZ–FE)	C18	B	38	P4		39
A3	34 (2ZZ–GE)	D1		38	S1	B	35 (2ZZ–GE)
	36 (1ZZ–FE)	D2		38			37 (1ZZ–FE)
A10	38	I11		39	S7	A	39
A19	40	J1		37 (1ZZ–FE)		B	39
A20	40	J2		39	T7		39
B2	34 (2ZZ–GE)	J3		39			
	36 (1ZZ–FE)	J5	B	39			

: Relay Blocks

Code	See Page	Relay Blocks (Relay Block Location)
1	23	Engine Room R/B (Engine Compartment Left)

: Junction Block and Wire Harness Connector

Code	See Page	Junction Block and Wire Harness (Connector Location)
IC	25	Engine Room Main Wire and Instrument Panel J/B (Lower Finish Panel)
IG	25	Instrument Panel Wire and Instrument Panel J/B (Lower Finish Panel)
IK	24	
IL		
IM		
1A	23	Engine Wire and Engine Room J/B (Engine Compartment Left)
3B	29	Instrument Panel Wire and RH J/B (Right Side of the Instrument Panel Reinforcement)
4B	32	Instrument Panel Wire and Center J/B (Behind the Combination Meter)
4C		

: **Connector Joining Wire Harness and Wire Harness**

Code	See Page	Joining Wire Harness and Wire Harness (Connector Location)
EA1	43 (1ZZ–FE)	Engine Wire and Engine Room Main Wire (Inside of the Engine Room R/B)
IA4	44	Engine Room Main Wire and Instrument Panel Wire (Instrument Panel Reinforcement LH)
IA5		
IA6		
IB1	44	Engine Room Main Wire and Floor Wire (Cowl Side Panel LH)
IG3	45	Engine Wire and Instrument Panel Wire (Blower Unit RH)
BD1	46	Skid Control Sensor Wire LH and Floor Wire (Quarter Wheel House LH)
BE1	46	Skid Control Sensor Wire RH and Floor Wire (Quarter Wheel House RH)

: **Ground Points**

Code	See Page	Ground Points Location
EA	42 (2ZZ–GE)	Front Right Fender
	43 (1ZZ–FE)	
EB	42 (2ZZ–GE)	Front Left Suspension Tower
	43 (1ZZ–FE)	
EC	42 (2ZZ–GE)	Left Side of the Cylinder Head
	43 (1ZZ–FE)	
IE	44	Behind Combination Meter

NOTICE: When inspecting or repairing the SRS, perform service in accordance with the following precautionary instructions and the procedure, and precautions in the Repair Manual applicable for the model year.

- Malfunction symptoms of the SRS are difficult to confirm, so the DTCs become the most important source of information when troubleshooting. When troubleshooting the SRS, always inspect the DTCs before disconnecting the battery.
- **Work must be started more than 90 seconds after the ignition SW is turned to the ”LOCK” position and the negative (–) terminal cable is disconnected from the battery.**
  (The SRS is equipped with a back–up power source so that if work is started within 90 seconds from disconnecting the negative (–) terminal cable of the battery, the SRS may deploy.)
- When the negative (–) terminal cable is disconnected from the battery, the memory of the clock and audio system will be cleared. So before starting work, make a record of the contents in the audio memory system. When work is finished, reset the audio systems as they were before and adjust the clock. Some vehicles have power tilt steering, power telescopic steering, power seat and power outside rear view mirror which are all equipped with memory function. However, it is not possible to make a record of these memory contents. So when the work is finished, it will be necessary to explain it to your customer, and ask the customer to adjust the features and reset the memory. To avoid erasing the memory in each system, never use a back–up power supply from outside the vehicle.
- Before repair, remove the airbag sensor if shocks are likely to be applied to the sensor during repair.
- Do not expose the following parts directly to hot air or flame;
- Even in cases of a minor collision where the SRS does not deploy, the following parts should be inspected;
- Never use SRS parts from another vehicle. When replacing parts, replace with new parts.
- For the purpose of reuse, never disassemble and repair the following parts.
- If the following parts have been dropped, or have cracks, dents and other defects in their case, bracket, and connector, replace with new one.
- Use a volt/ohmmeter with high impedance (10 kΩ/V minimum) for troubleshooting electrical circuits of the system.
- Information labels are attached to the periphery of the SRS components. Follow the instructions of the notice.
- After work on the SRS is completed, check the SRS warning light.
- If the vehicle is equipped with a mobile communication system, refer to the precaution in the IN section of the Repair Manual.

* Steering wheel pad
* Front passenger airbag assembly
* Side airbag assembly
* Curtain shield airbag assembly
* Seat belt pretensioner
* Center airbag sensor assembly
* Front airbag sensor assembly
* Side airbag sensor assembly
* Rear airbag sensor assembly

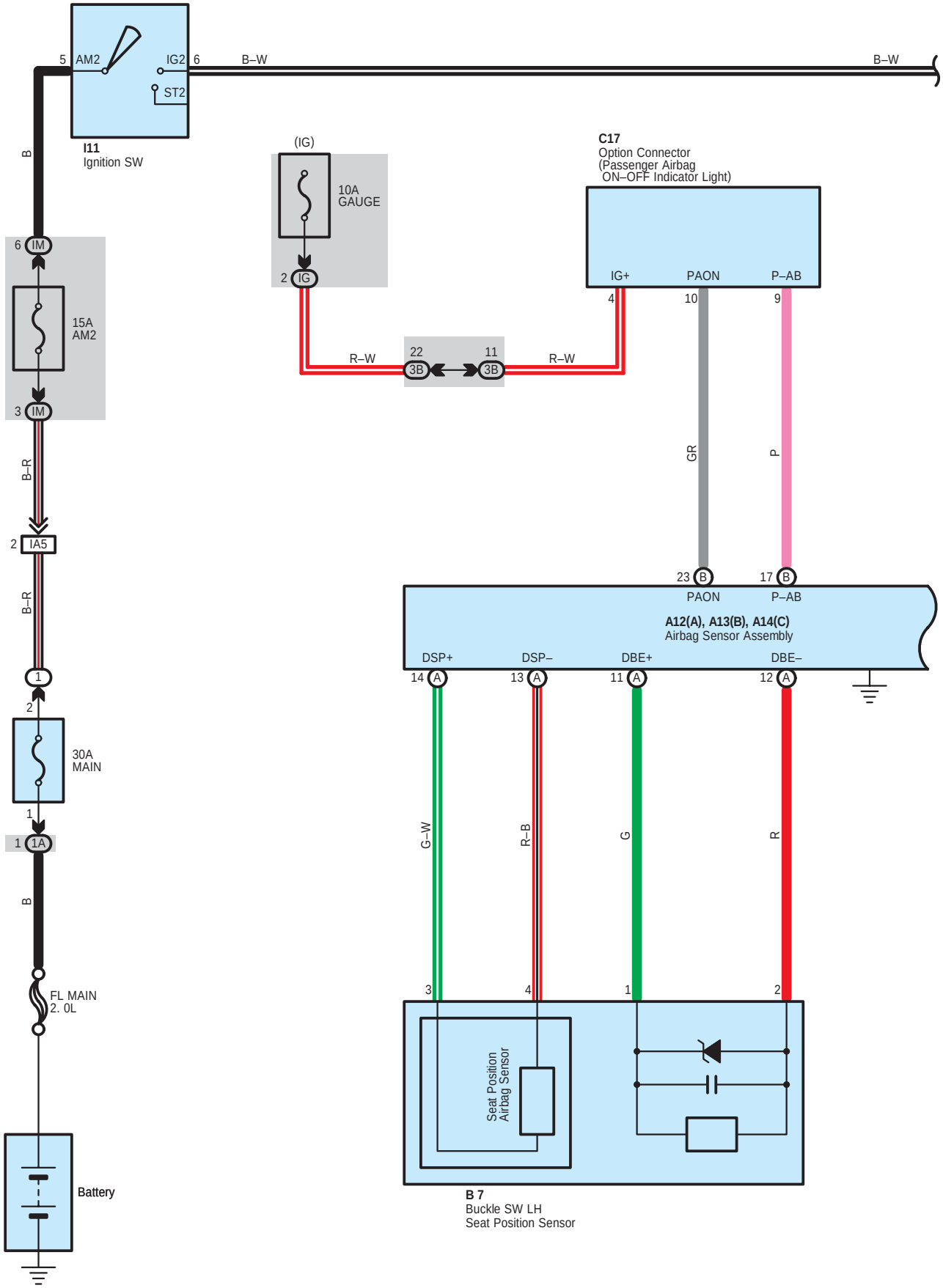
5 AM2
IG2 6
ST2
B–W
B–W
I11
Ignition SW
B
(IG)
10A
GAUGE
2 IG
C17
Option Connector
(Passenger Airbag
ON–OFF Indicator Light)
IG+
PAON
P–AB
4
10
9
6 IM
15A
AM2
3 IM
R–W
22
3B
11
3B
R–W
B–R
GR
P
2 IA5
23 B
17 B
PAON
P–AB
B–R
A12(A), A13(B), A14(C)
Airbag Sensor Assembly
DSP+
DSP–
DBE+
DBE–
1
14 A
13 A
11 A
12 A
2
30A
MAIN
1
1 1A
G–W
R–B
G
R
B
3
4
1
2
FL MAIN
2. 0L
Seat Position
Airbag Sensor
Battery
B 7
Buckle SW LH
Seat Position Sensor

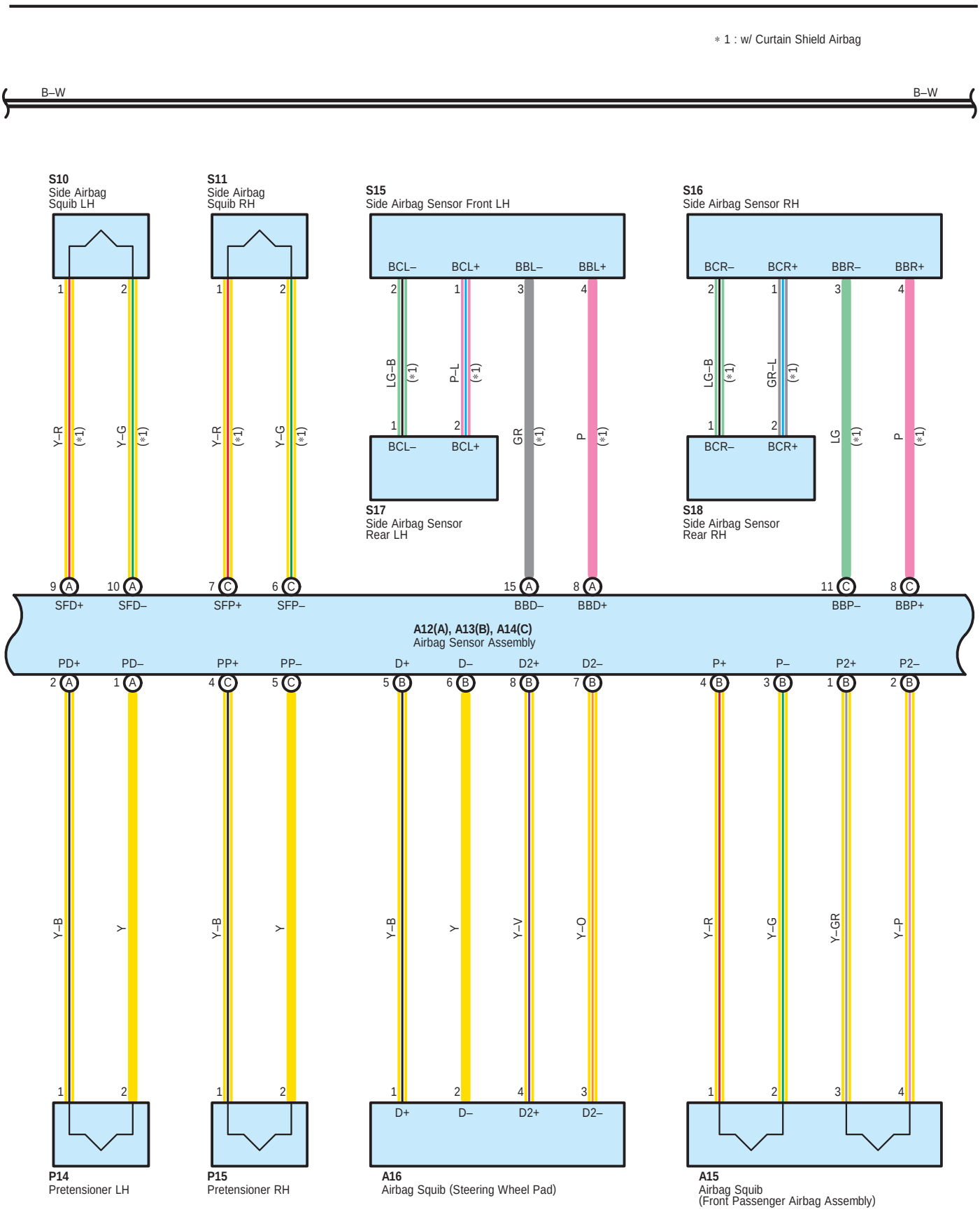
∗ 1 : w/ Curtain Shield Airbag
B–W
B–W
S10
Side Airbag
Squib LH
S11
Side Airbag
Squib RH
S15
Side Airbag Sensor Front LH
S16
Side Airbag Sensor RH
BCL–
BCL+
BBL–
BBL+
BCR–
BCR+
BBR–
BBR+
LG–B
P–L
GR
P
LG–B
GR–L
LG
P
Y–R
Y–G
Y–R
Y–G
(∗1)
S17
Side Airbag Sensor
Rear LH
S18
Side Airbag Sensor
Rear RH
SFD+
SFD–
SFP+
SFP–
BBD–
BBD+
BBP–
BBP+
A12(A), A13(B), A14(C)
Airbag Sensor Assembly
PD+
PD–
PP+
PP–
D+
D–
D2+
D2–
P+
P–
P2+
P2–
Y–B
Y
Y–B
Y
Y–B
Y
Y–V
Y–O
Y–R
Y–G
Y–GR
Y–P
P14
Pretensioner LH
P15
Pretensioner RH
A16
Airbag Squib (Steering Wheel Pad)
A15
Airbag Squib
(Front Passenger Airbag Assembly)

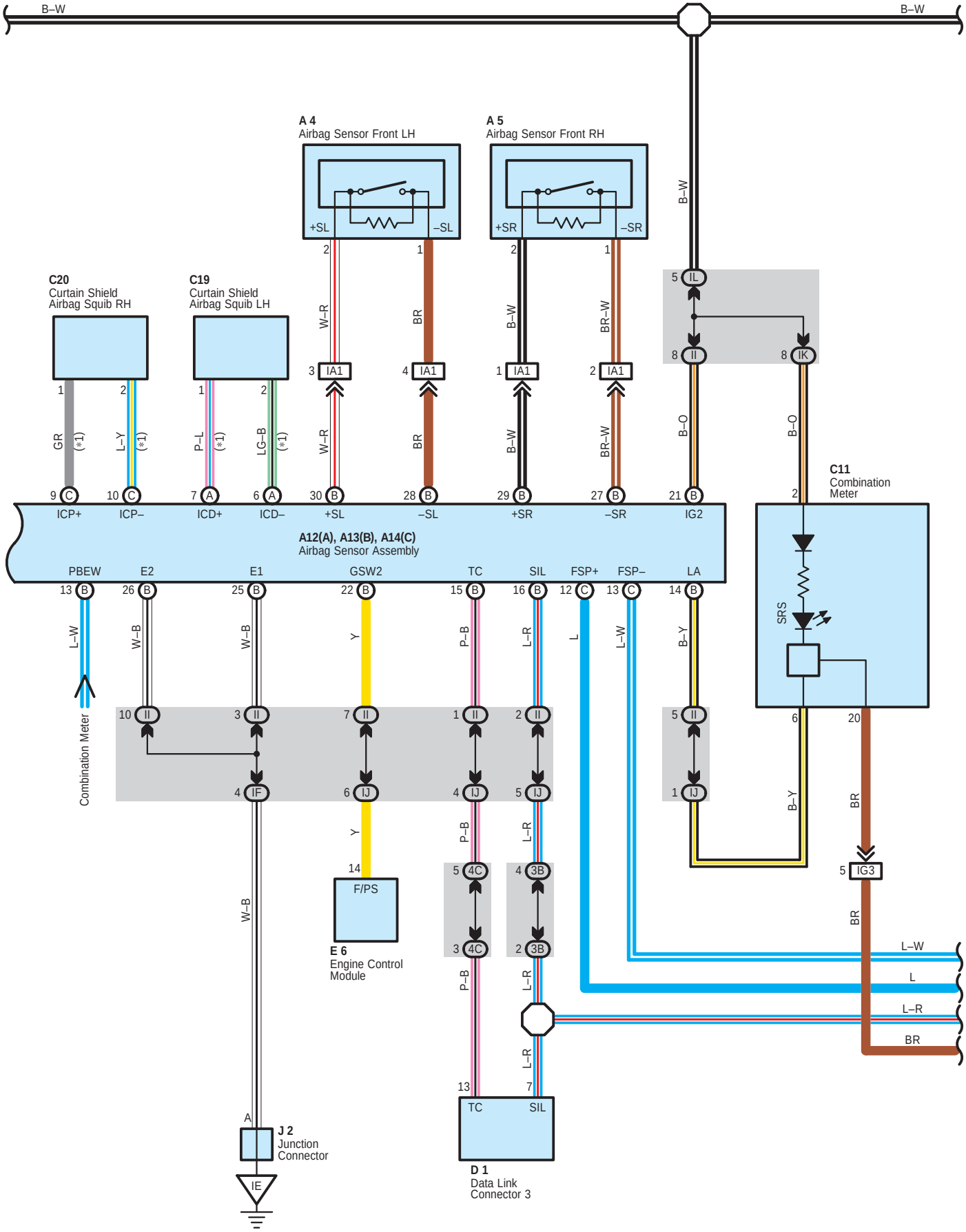
B–W
B–W
A 4
Airbag Sensor Front LH
+SL
–SL
A 5
Airbag Sensor Front RH
+SR
–SR
C20
Curtain Shield
Airbag Squib RH
C19
Curtain Shield
Airbag Squib LH
GR
L–Y
P–L
LG–B
(*1)
W–R
BR
B–W
BR–W
B–O
IA1
IL
II
IK
ICP+
ICP–
ICD+
ICD–
+SL
–SL
+SR
–SR
IG2
A12(A), A13(B), A14(C)
Airbag Sensor Assembly
PBEW
E2
E1
GSW2
TC
SIL
FSP+
FSP–
LA
C11
Combination
Meter
SRS
L–W
W–B
Y
P–B
L–R
L
B–Y
BR
IF
IJ
4C
3B
IG3
Combination Meter
F/PS
E 6
Engine Control
Module
J 2
Junction
Connector
IE
D 1
Data Link
Connector 3
TC
SIL

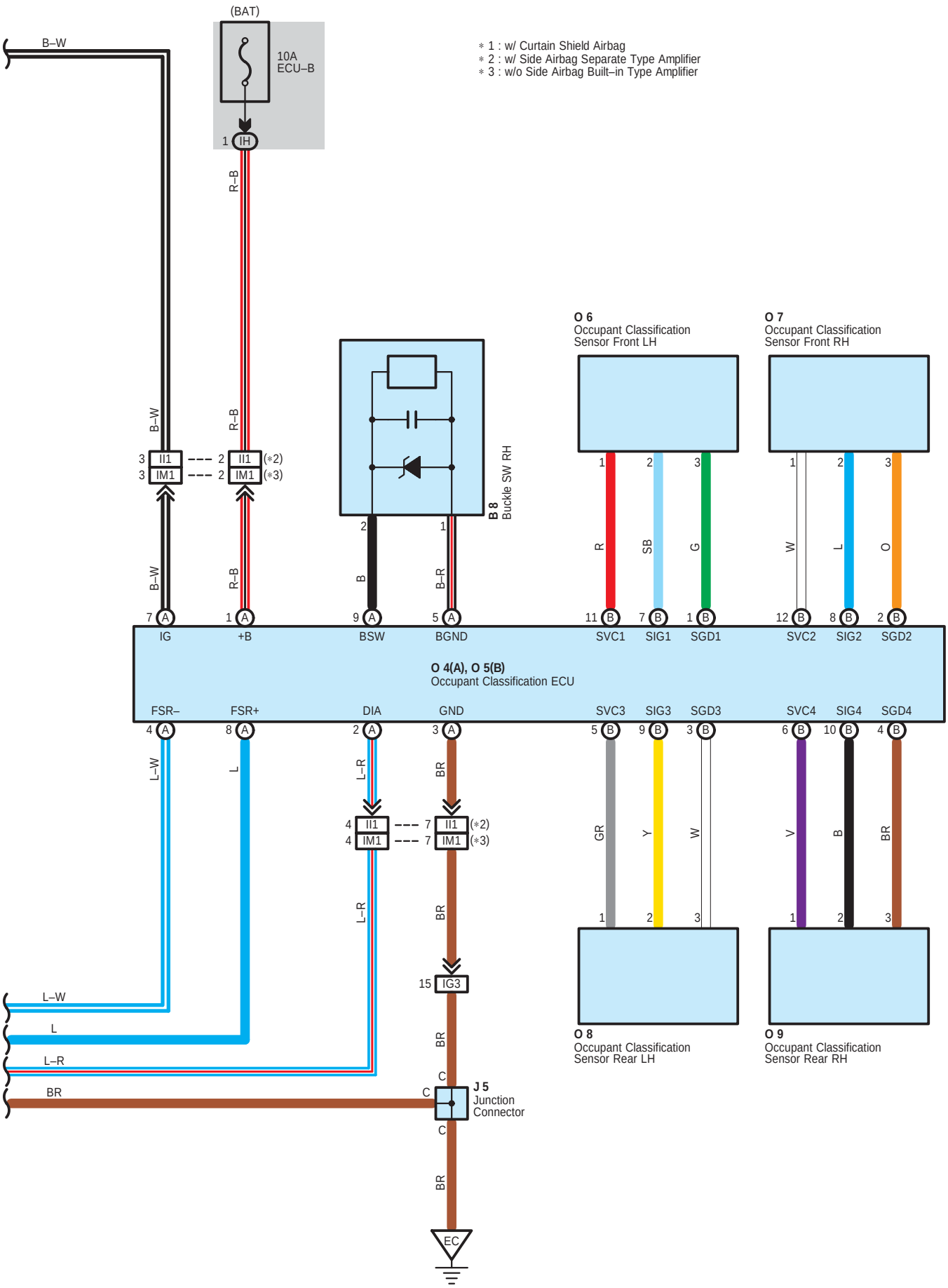
(BAT)
10A
ECU–B
1 IH
B–W
R–B
∗ 1 : w/ Curtain Shield Airbag
∗ 2 : w/ Side Airbag Separate Type Amplifier
∗ 3 : w/o Side Airbag Built–in Type Amplifier
3 II1 --- 2 II1 (∗2)
3 IM1 --- 2 IM1 (∗3)
B 8
Buckle SW RH
O 6
Occupant Classification
Sensor Front LH
O 7
Occupant Classification
Sensor Front RH
7 A IG
1 A +B
9 A BSW
5 A BGND
11 B SVC1
7 B SIG1
1 B SGD1
12 B SVC2
8 B SIG2
2 B SGD2
O 4(A), O 5(B)
Occupant Classification ECU
FSR–
FSR+
DIA
GND
SVC3
SIG3
SGD3
SVC4
SIG4
SGD4
4 A
8 A
2 A
3 A
5 B
9 B
3 B
6 B
10 B
4 B
L–W
L
L–R
BR
GR
Y
W
V
B
4 II1 --- 7 II1 (∗2)
4 IM1 --- 7 IM1 (∗3)
15 IG3
C
J 5
Junction
Connector
EC
O 8
Occupant Classification
Sensor Rear LH
O 9
Occupant Classification
Sensor Rear RH

System Outline

The SRS is a driver and front passenger protection device which has a supplemental role to the seat belts.
When the ignition SW is turned to ON, current from the MAIN fuse flows to AM2 fuse to ignition SW (IG2) to TERMINAL (B) 21 of the airbag sensor assembly.
If an accident occurs while driving, when the frontal impact exceeds a set level, the current from the TERMINAL (B) 21 of the airbag sensor assembly flows to TERMINALS (B) 5, (B) 8, (B) 4, (B) 1, (A) 2 and (C) 4 of the airbag sensor assembly to the airbag squibs and the pretensioners to TERMINALS (B) 6, (B) 7, (B) 3, (B) 2, (A) 1 and (C) 5 of the airbag sensor assembly to TERMINAL (B) 25, (B) 26 or BODY GROUND to GROUND, so that the current flows to the front airbag squibs and the pretensioners, and causes them to operate.
When the side impact also exceeds a set level, the current from the TERMINAL (B) 21 of the airbag sensor assembly flows to TERMINALS (A) 9, (C) 7, (A) 7, (C) 9 of the airbag sensor assembly to the side airbag squibs and curtain shield airbag squibs to TERMINALS (A) 10, (C) 6, (A) 6, (C) 10 of the airbag sensor assembly to TERMINAL (B) 25, (B) 26 or BODY GROUND to GROUND, causing side airbag squibs to operate.
The airbag stored inside the steering wheel pad is instantaneously expanded to soften the shock to the driver.
The airbag stored inside the passenger's instrument panel is instantaneously expanded to soften the shock to the front passenger.
Side airbags are instantaneously expanded to soften the shock of side to the driver and front passenger.
The curtain shield airbag can reduce impact on the head of the front and rear passengers and reduce risk or injury.
The pretensioners make sure of the seat belt restrainability.

: Parts Location

Code		See Page	Code		See Page	Code	See Page
A4		34 (2ZZ–GE)	C17		38	O8	41
		36 (1ZZ–FE)	C19		40	O9	41
A5		34 (2ZZ–GE)	C20		40	P14	41
		36 (1ZZ–FE)	D1		38	P15	41
A12	A	38	E6		38	S10	41
A13	B	38	I11		39	S11	41
A14	C	38	J2		39	S15	41
A15		38	J5		39	S16	41
A16		38	O4	A	41	S17	41
B7		40	O5	B	41	S18	41
B8		40	O6		41		
C11		38	O7		41		

: Relay Blocks

Code	See Page	Relay Blocks (Relay Block Location)
1	23	Engine Room R/B (Engine Compartment Left)

: Junction Block and Wire Harness Connector

Code	See Page	Junction Block and Wire Harness (Connector Location)
IF	25	Instrument Panel Wire and Instrument Panel J/B (Lower Finish Panel)
IG		
IH		
II		
IJ		
IK	24	
IL		
IM		
1A	23	Engine Wire and Engine Room J/B (Engine Compartment Left)
3B	29	Instrument Panel Wire and RH J/B (Right Side of the Instrument Panel Reinforcement)
4C	32	Instrument Panel Wire and Center J/B (Behind the Combination Meter)

: **Connector Joining Wire Harness and Wire Harness**

Code	See Page	Joining Wire Harness and Wire Harness (Connector Location)
IA1	44	Engine Room Main Wire and Instrument Panel Wire (Instrument Panel Reinforcement LH)
IA5		
IG3	45	Engine Wire and Instrument Panel Wire (Blower Unit RH)
II1	45	Instrument Panel Wire and Floor Wire (Under the Instrument Panel Center)
IM1	45	Instrument Panel Wire and Instrument Panel No.3 Wire (Under the Instrument Panel Center)

: **Ground Points**

Code	See Page	Ground Points Location
EC	42 (2ZZ–GE)	Left Side of the Cylinder Head
	43 (1ZZ–FE)	
IE	44	Behind Combination Meter

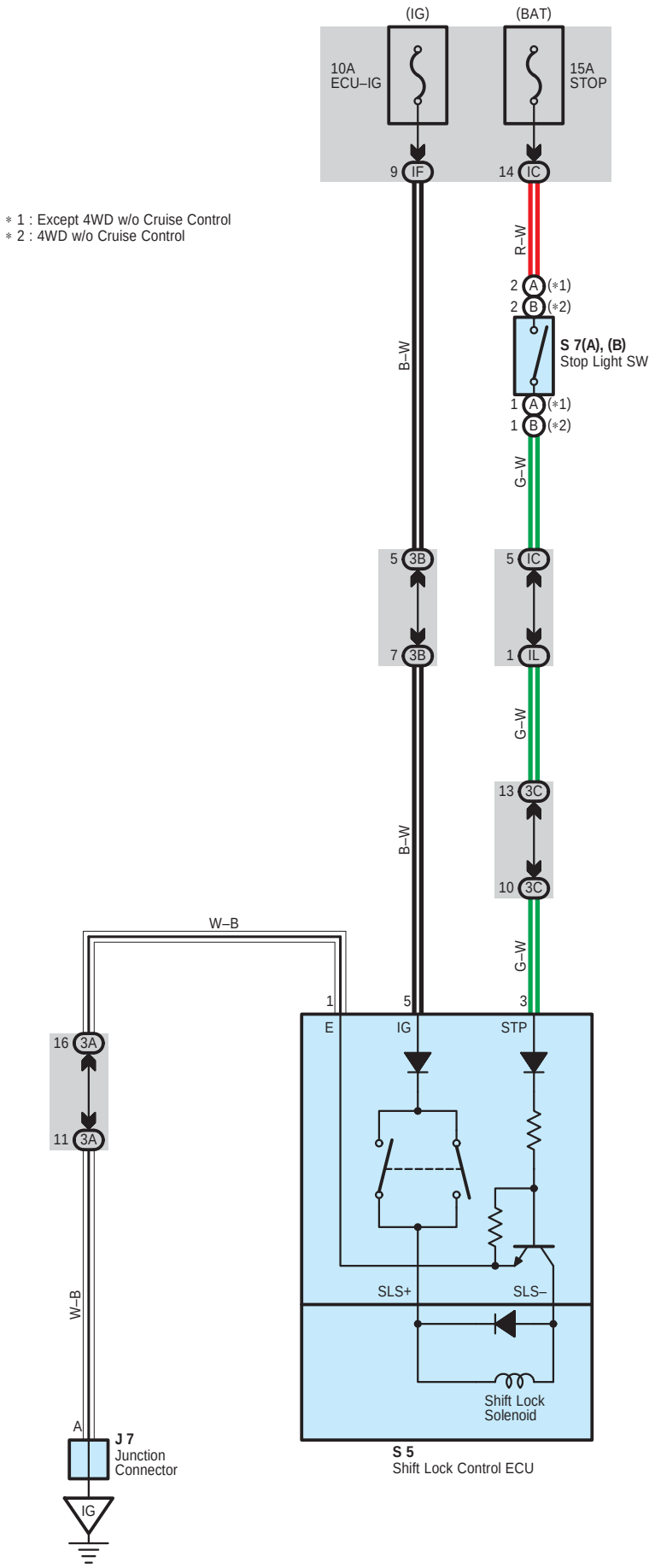
(IG)
(BAT)
10A
ECU–IG
15A
STOP
9 IF
14 IC
∗ 1 : Except 4WD w/o Cruise Control
∗ 2 : 4WD w/o Cruise Control
R–W
2 A (∗1)
2 B (∗2)
S 7(A), (B)
Stop Light SW
1 A (∗1)
1 B (∗2)
B–W
G–W
5 3B
5 IC
7 3B
1 IL
G–W
13 3C
B–W
10 3C
W–B
G–W
1
5
3
E
IG
STP
16 3A
11 3A
SLS+
SLS–
W–B
Shift Lock
Solenoid
A
J 7
Junction
Connector
IG
S 5
Shift Lock Control ECU

System Outline

When the ignition SW is turned to ON position, the current from the ECU–IG fuse flows to TERMINAL 5 of the shift lock control ECU.

Shift Lock Mechanism

With the ignition SW at ON position, when a signal that the brake pedal is depressed (Stop light SW on) and a signal that the shift lever is put in P position is input to the ECU, the ECU operates and the current flows from TERMINAL 5 of the ECU to TERMINAL SLS+ of the shift lock solenoid to TERMINAL SLS– to TERMINAL 1 of the ECU to GROUND. This causes the shift lock solenoid to turn on (Plate stopper disengages) and the shift lever can shift into position other than P.

○ : **Parts Location**

Code	See Page	Code		See Page	Code	See Page
J7	39	S7	A	39		
S5	39		B	39		

: **Junction Block and Wire Harness Connector**

Code	See Page	Junction Block and Wire Harness (Connector Location)
IC	25	Engine Room Main Wire and Instrument Panel J/B (Lower Finish Panel)
IF	25	Instrument Panel Wire and Instrument Panel J/B (Lower Finish Panel)
IL	24	
3A	29	Instrument Panel Wire and RH J/B (Right Side of the Instrument Panel Reinforcement)
3B		
3C		

▽ : **Ground Points**

Code	See Page	Ground Points Location
IG	44	Right Kick Panel

Light Reminder and Key Reminder

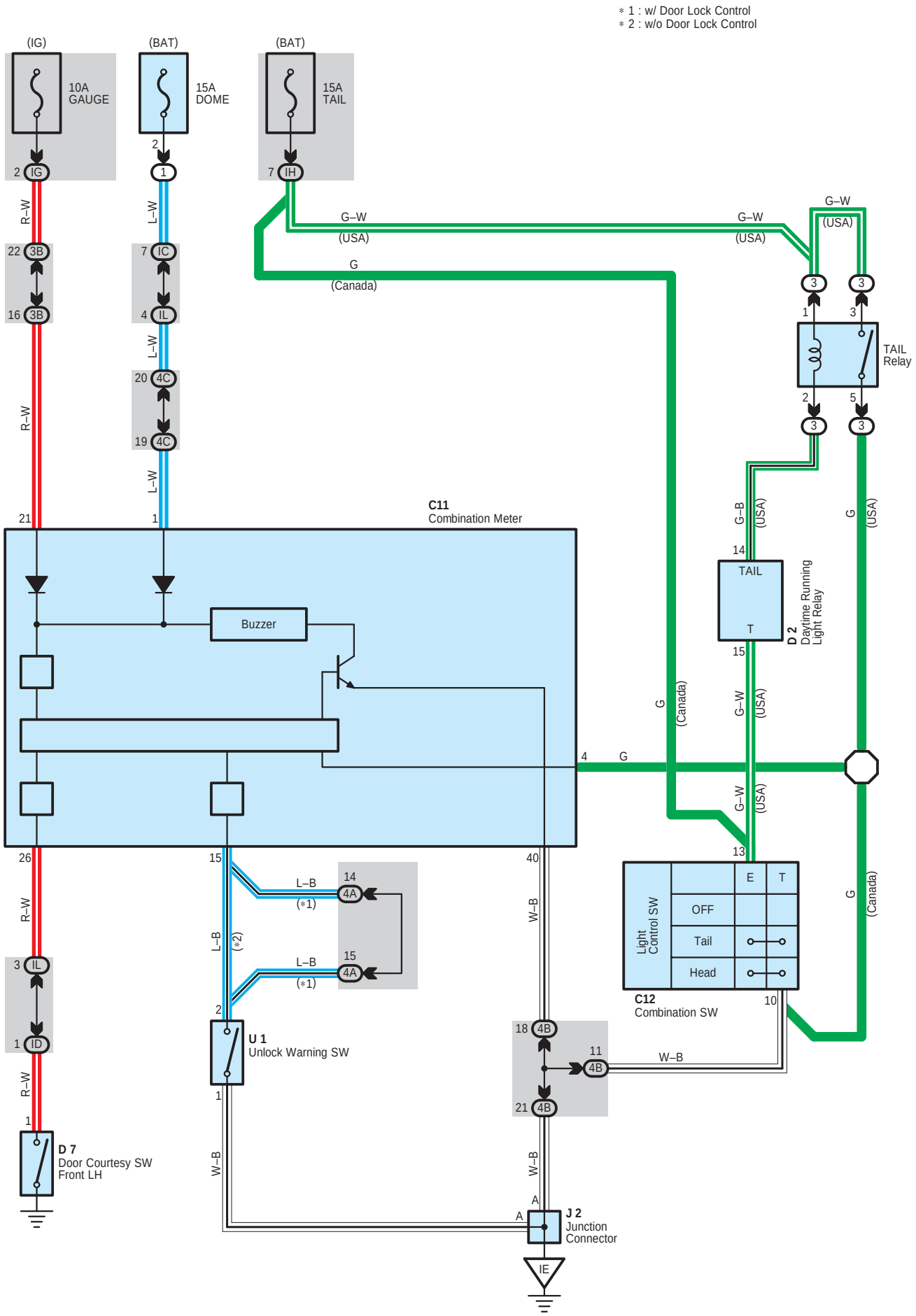

System Outline

The current is applied at all times to TERMINAL 1 of the combination meter through the DOME fuse.
When the ignition SW is turned to ON position, the current flows to TERMINAL 21 of the combination meter through the GAUGE fuse. When the light control SW is turned to Tail or Head position, current is applied to TERMINAL 4 of the combination meter through the TAIL fuse via the TAIL relay (USA) or light control SW (Canada).

1. Light Reminder System

When the light control SW is in Tail or Head position, the ignition SW turned to OFF from ON position, and the driver's door opened (Door courtesy SW on), the current flows to TERMINAL 21 of the combination meter stops. As a result, the combination meter is activated and current flows from TERMINAL 1 of the combination meter to TERMINAL 40 to GROUND, the buzzer in the combination meter goes on to remind the light is lighting up.

2. Key Reminder System

When the driver door is opened with the ignition SW off and ignition key remaining in the key cylinder (Unlock warning SW on), a signal is input from the unlock warning SW to TERMINAL 15 of the combination meter, and from the door courtesy SW front LH to TERMINAL 26 of the combination meter. As a result, the buzzer in the combination meter goes on and warns the driver that the key is remaining in the key cylinder.

: Parts Location

Code	See Page	Code	See Page	Code	See Page
C11	38	D2	38	J2	39
C12	38	D7	40	U1	39

: Relay Blocks

Code	See Page	Relay Blocks (Relay Block Location)
1	23	Engine Room R/B (Engine Compartment Left)
3	28	RH R/B (Right Side of the Instrument Panel Reinforcement)

: Junction Block and Wire Harness Connector

Code	See Page	Junction Block and Wire Harness (Connector Location)
IC	25	Engine Room Main Wire and Instrument Panel J/B (Lower Finish Panel)
ID	25	Floor Wire and Instrument Panel J/B (Lower Finish Panel)
IG	25	Instrument Panel Wire and Instrument Panel J/B (Lower Finish Panel)
IH		
IL	24	
3B	29	Instrument Panel Wire and RH J/B (Right Side of the Instrument Panel Reinforcement)
4A	32	Instrument Panel Wire and Center J/B (Behind the Combination Meter)
4B		
4C		

: Ground Points

Code	See Page	Ground Points Location
IE	44	Behind Combination Meter

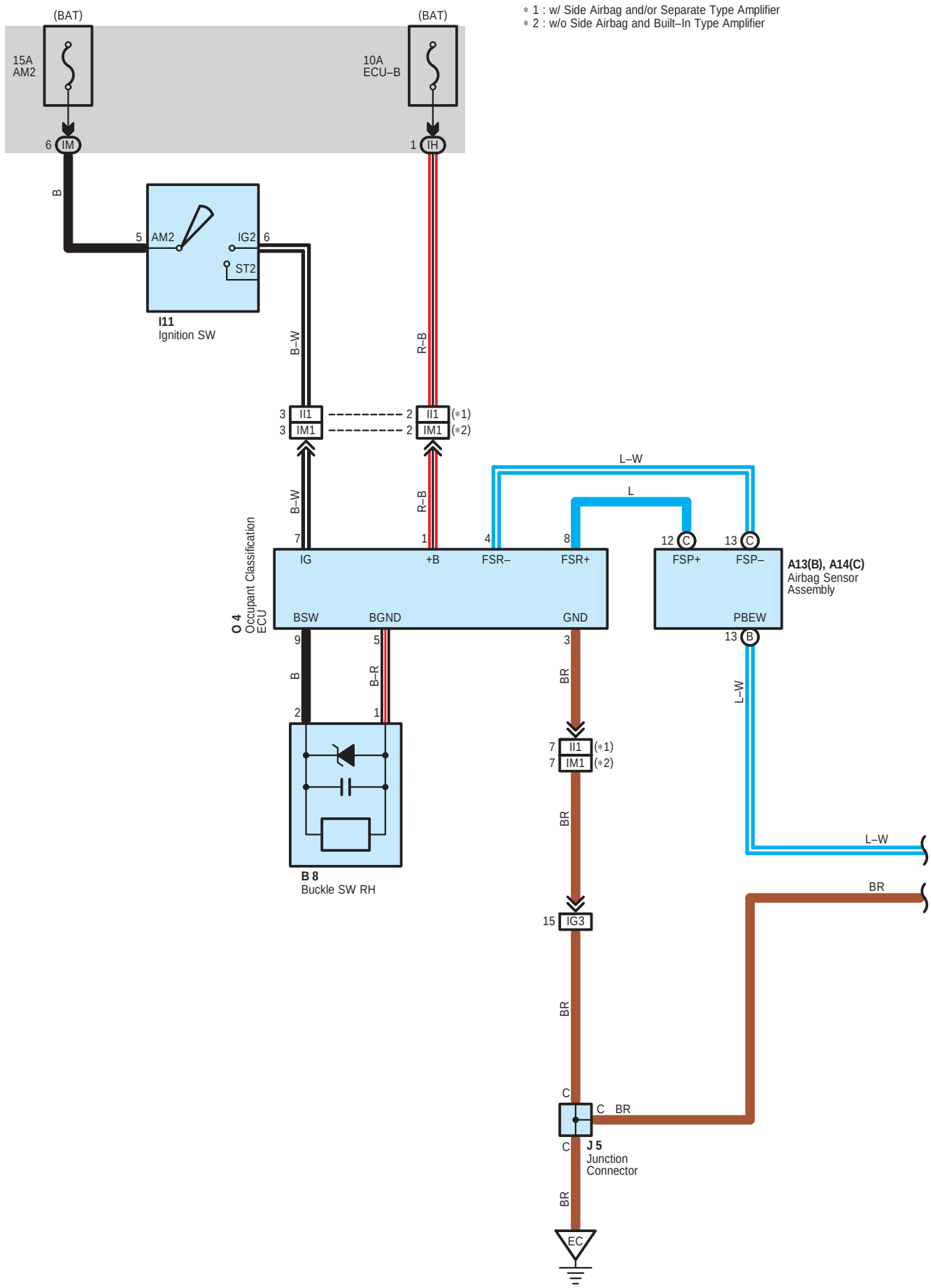
(BAT)
15A
AM2
6 IM
(BAT)
10A
ECU–B
1 IH
∗ 1 : w/ Side Airbag and/or Separate Type Amplifier
∗ 2 : w/o Side Airbag and Built–In Type Amplifier
B
5 AM2
IG2 6
ST2
I11
Ignition SW
B–W
R–B
3 II1
3 IM1
2 II1 (∗1)
2 IM1 (∗2)
L–W
L
7 IG
1 +B
4 FSR–
8 FSR+
12 C FSP+
13 C FSP–
A13(B), A14(C)
Airbag Sensor
Assembly
O 4
Occupant Classification
ECU
BSW
BGND
GND
PBEW
13 B
9
5
3
B
B–R
BR
L–W
2
1
7 II1 (∗1)
7 IM1 (∗2)
B 8
Buckle SW RH
15 IG3
C
C BR
J 5
Junction
Connector
EC

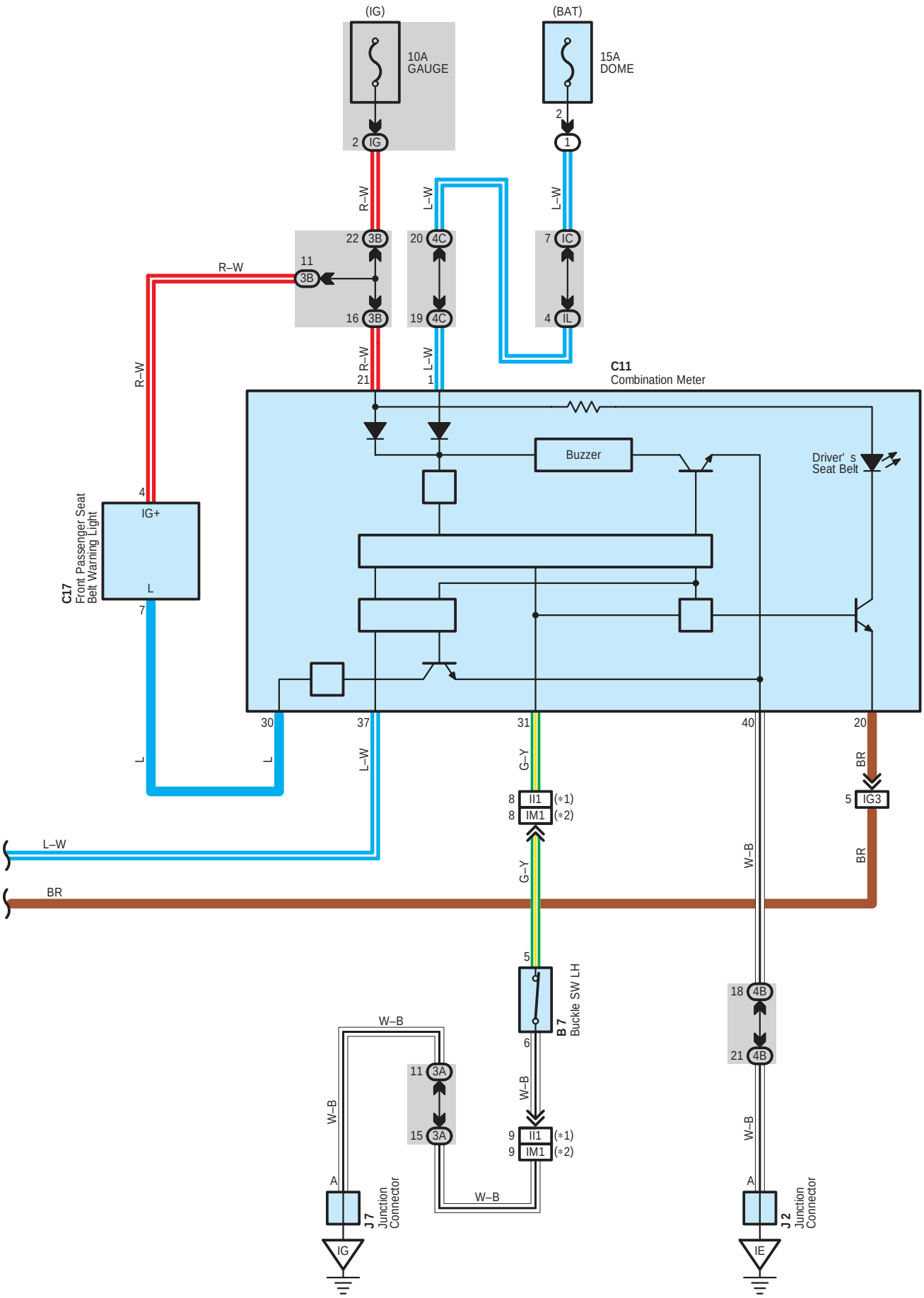
(IG)
10A
GAUGE
(BAT)
15A
DOME
2
IG
2
1
R–W
L–W
L–W
22
3B
20
4C
7
IC
11
3B
R–W
16
3B
19
4C
4
IL
R–W
R–W
21
L–W
1
C11
Combination Meter
Buzzer
Driver' s
Seat Belt
4
IG+
C17
Front Passenger Seat
Belt Warning Light
L
7
30
37
31
40
20
L
L
L–W
G–Y
BR
8
II1
(*1)
8
IM1
(*2)
5
IG3
L–W
G–Y
W–B
BR
BR
5
B 7
Buckle SW LH
18
4B
W–B
6
21
4B
11
3A
W–B
W–B
15
3A
9
II1
(*1)
9
IM1
(*2)
W–B
A
J 7
Junction
Connector
W–B
A
J 2
Junction
Connector
IG
IE

Seat Belt Warning

System Outline

Current is always applied from the DOME fuse to TERMINAL 1 of the combination meter. When the ignition SW is turned to ON position, the current from the GAUGE fuse flows to TERMINAL 21 of the combination meter and flows to TERMINAL 4 of the front passenger seat belt warning light.

Seat Belt Warning System

When the ignition SW turned on, a signal is input to the combination meter. To determine whether the driver has fastened the seat belt, a signal is input from the buckle SW LH to TERMINAL 31 of the combination meter. When the seat belt is not fastened, the seat belt warning light in the combination meter blinks, and emits a warning sound.
In addition, the front passenger is recognized by a sensor (Occupant detection sensor) is installed in the front passenger seat, and determines whether the seat belt is fastened. When not fastened, the signals from the occupant detection sensor is input to TERMINAL 37 of the combination meter, and the front passenger seat belt warning light blinks.

: Parts Location

Code		See Page	Code	See Page	Code	See Page
A13	B	38	C11	38	J5	39
A14	C	38	C17	38	J7	39
B7		40	I11	39	O4	41
B8		40	J2	39		

: Relay Blocks

Code	See Page	Relay Blocks (Relay Block Location)
1	23	Engine Room R/B (Engine Compartment Left)

: Junction Block and Wire Harness Connector

Code	See Page	Junction Block and Wire Harness (Connector Location)
IC	25	Engine Room Main Wire and Instrument Panel J/B (Lower Finish Panel)
IG	25	Instrument Panel Wire and Instrument Panel J/B (Lower Finish Panel)
IH		
IL	24	
IM		
3A	29	Instrument Panel Wire and RH J/B (Right Side of the Instrument Panel Reinforcement)
3B		
4B	32	Instrument Panel Wire and Center J/B (Behind the Combination Meter)
4C		

: Connector Joining Wire Harness and Wire Harness

Code	See Page	Joining Wire Harness and Wire Harness (Connector Location)
IG3	45	Engine Wire and Instrument Panel Wire (Blower Unit RH)
II1	45	Instrument Panel Wire and Floor Wire (Under the Instrument Panel Center)
IM1	45	Instrument Panel Wire and Instrument Panel No.3 Wire (Under the Instrument Panel Center)

: Ground Points

Code	See Page	Ground Points Location
EC	42 (2ZZ–GE)	Left Side of the Cylinder Head
	43 (1ZZ–FE)	
IE	44	Behind Combination Meter
IG	44	Right Kick Panel

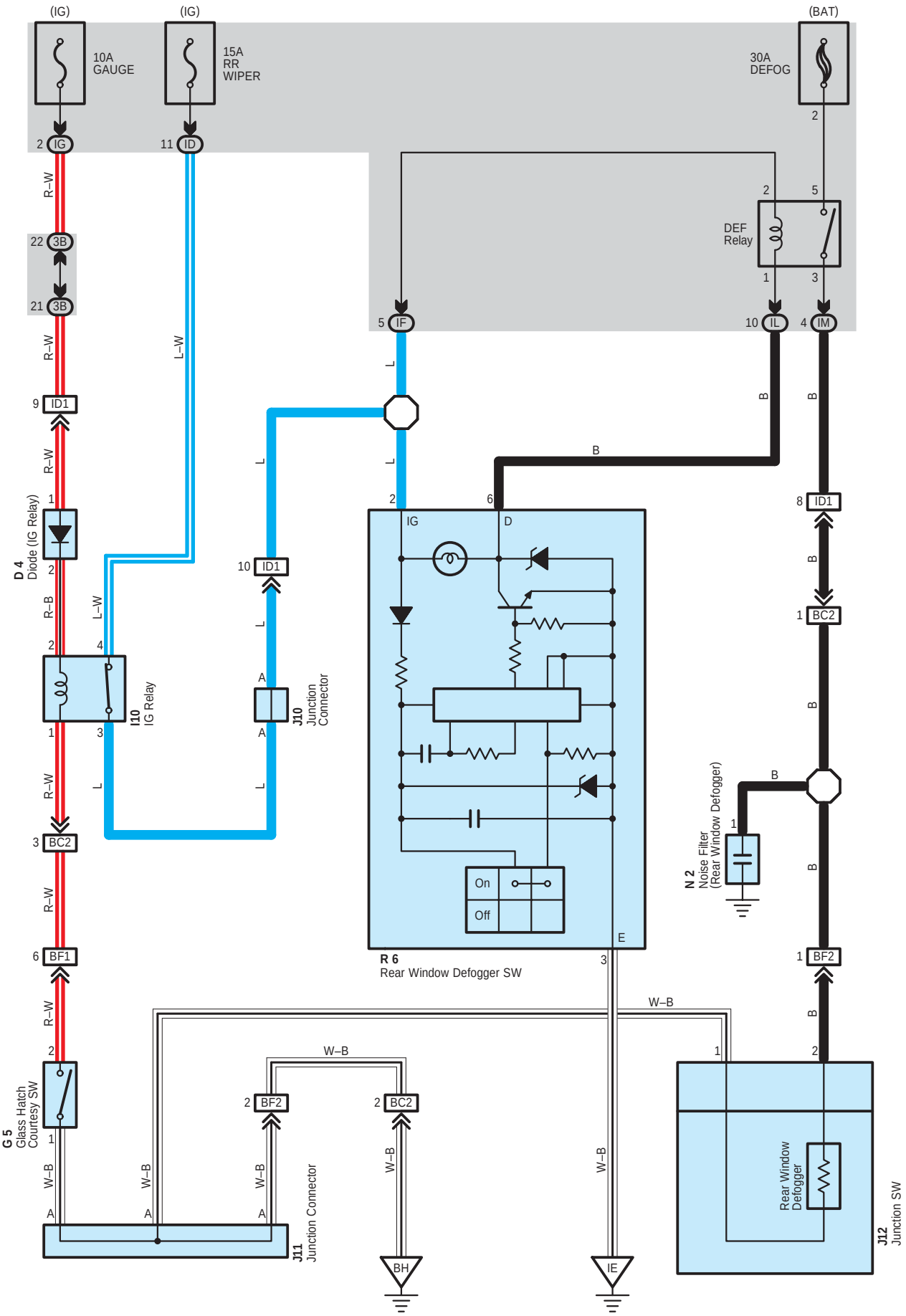
(IG)
10A
GAUGE
(IG)
15A
RR
WIPER
(BAT)
30A
DEFOG
2 IG
11 ID
2
R–W
22 3B
21 3B
R–W
L–W
9 ID1
R–W
1
D 4
Diode (IG Relay)
2
R–B
L–W
2
4
1
3
I10
IG Relay
R–W
3 BC2
R–W
6 BF1
R–W
2
G 5
Glass Hatch
Courtesy SW
1
W–B
A
W–B
A
W–B
A
J11
Junction Connector
2 BF2
2 BC2
W–B
BH
W–B
IE
L
L
10 ID1
L
A
A
J10
Junction
Connector
L
L
5 IF
L
L
2
6
IG
D
B
On
Off
E
3
R 6
Rear Window Defogger SW
2
5
DEF
Relay
1
3
10 IL
4 IM
B
B
B
8 ID1
B
1 BC2
B
B
1
N 2
Noise Filter
(Rear Window Defogger)
B
B
1 BF2
B
W–B
1
2
Rear Window
Defogger
J12
Junction SW

○ : **Parts Location**

Code	See Page	Code	See Page	Code	See Page
D4	38	J10	40	N2	41
G5	40	J11	40	R6	39
I10	39	J12	40		

: **Junction Block and Wire Harness Connector**

Code	See Page	Junction Block and Wire Harness (Connector Location)
ID	25	Floor Wire and Instrument Panel J/B (Lower Finish Panel)
IF	25	Instrument Panel Wire and Instrument Panel J/B (Lower Finish Panel)
IG		
IL	24	
IM		
3B	29	Instrument Panel Wire and RH J/B (Right Side of the Instrument Panel Reinforcement)

: **Connector Joining Wire Harness and Wire Harness**

Code	See Page	Joining Wire Harness and Wire Harness (Connector Location)
ID1	44	Instrument Panel Wire and Floor Wire (Left Kick Panel)
BC2	46	Back Door No.1 Wire and Floor Wire (Left Quarter Panel)
BF1	46	Back Door No.1 Wire and Back Door No.2 Wire (Back Panel LH)
BF2		

: **Ground Points**

Code	See Page	Ground Points Location
IE	44	Behind Combination Meter
BH	46	Left Quarter Panel

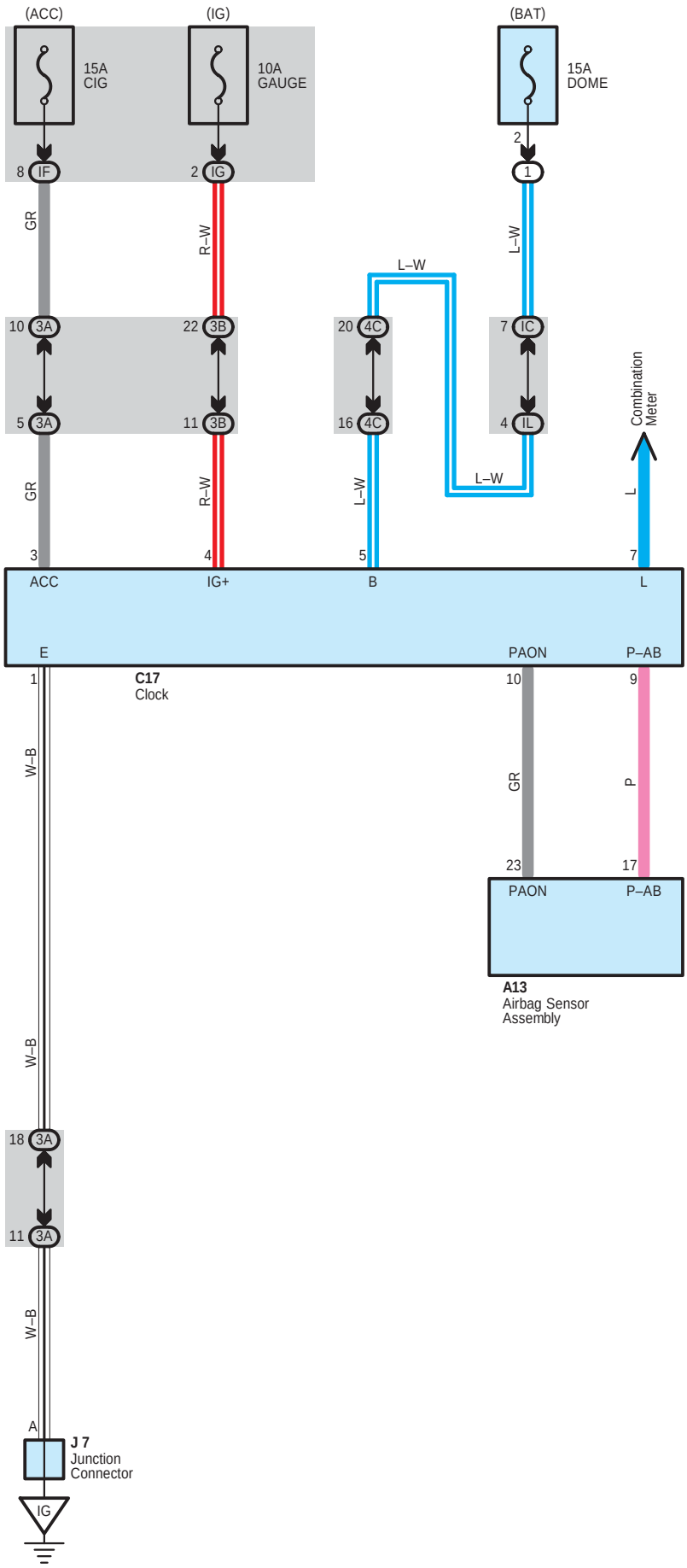
(ACC)
(IG)
(BAT)
15A
CIG
10A
GAUGE
15A
DOME
8 IF
2 IG
2
1
GR
R–W
L–W
L–W
10 3A
22 3B
20 4C
7 IC
5 3A
11 3B
16 4C
4 IL
Combination
Meter
GR
R–W
L–W
L–W
L
3
4
5
7
ACC
IG+
B
L
E
PAON
P–AB
1
C17
Clock
10
9
W–B
GR
P
23
17
PAON
P–AB
A13
Airbag Sensor
Assembly
W–B
18 3A
11 3A
W–B
A
J 7
Junction
Connector
IG

○ : **Parts Location**

Code	See Page	Code	See Page	Code	See Page
A13	38	C17	38	J7	39

▭ : **Relay Blocks**

Code	See Page	Relay Blocks (Relay Block Location)
1	23	Engine Room R/B (Engine Compartment Left)

▭ : **Junction Block and Wire Harness Connector**

Code	See Page	Junction Block and Wire Harness (Connector Location)
IC	25	Engine Room Main Wire and Instrument Panel J/B (Lower Finish Panel)
IF	25	Instrument Panel Wire and Instrument Panel J/B (Lower Finish Panel)
IG		
IL	24	
3A	29	Instrument Panel Wire and RH J/B (Right Side of the Instrument Panel Reinforcement)
3B		
4C	32	Instrument Panel Wire and Center J/B (Behind the Combination Meter)

▽ : **Ground Points**

Code	See Page	Ground Points Location
IG	44	Right Kick Panel

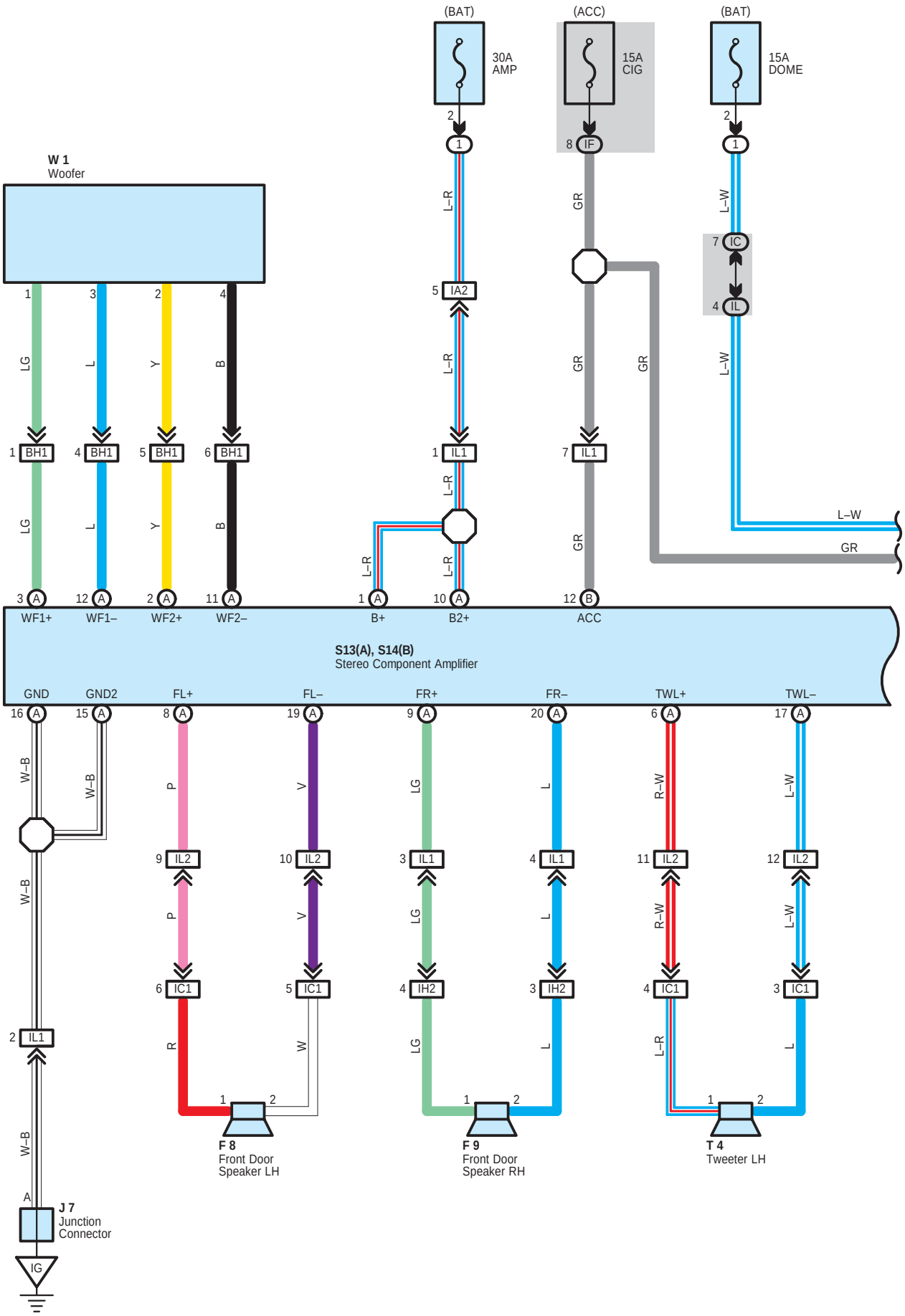
(BAT)
30A
AMP
(ACC)
15A
CIG
(BAT)
15A
DOME
W 1
Woofer
S13(A), S14(B)
Stereo Component Amplifier
WF1+
WF1–
WF2+
WF2–
B+
B2+
ACC
GND
GND2
FL+
FL–
FR+
FR–
TWL+
TWL–
F 8
Front Door
Speaker LH
F 9
Front Door
Speaker RH
T 4
Tweeter LH
J 7
Junction
Connector
IG

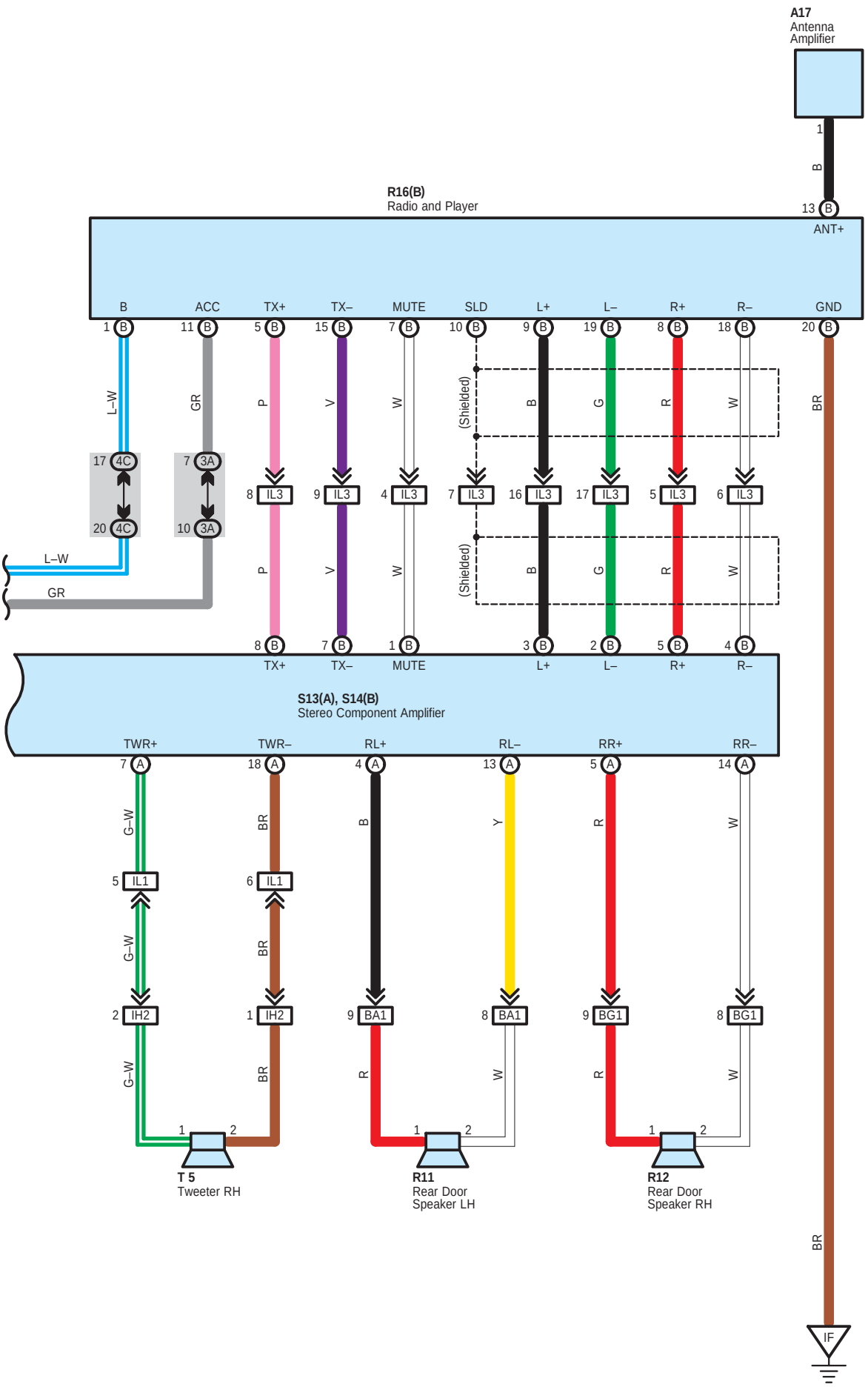
A17
Antenna
Amplifier
R16(B)
Radio and Player
ANT+
B
ACC
TX+
TX–
MUTE
SLD
L+
L–
R+
R–
GND
(Shielded)
S13(A), S14(B)
Stereo Component Amplifier
TWR+
TWR–
RL+
RL–
RR+
RR–
T 5
Tweeter RH
R11
Rear Door
Speaker LH
R12
Rear Door
Speaker RH
IF

Audio System for Separate Amplifier

○ : **Parts Location**

Code	See Page	Code	See Page	Code	See Page
A17	38	R11	41	S14 B	39
F8	40	R12	41	T4	41
F9	40	R16 B	39	T5	41
J7	39	S13 A	39	W1	41

▭ : **Relay Blocks**

Code	See Page	Relay Blocks (Relay Block Location)
1	23	Engine Room R/B (Engine Compartment Left)

▭ : **Junction Block and Wire Harness Connector**

Code	See Page	Junction Block and Wire Harness (Connector Location)
IC	25	Engine Room Main Wire and Instrument Panel J/B (Lower Finish Panel)
IF	25	Instrument Panel Wire and Instrument Panel J/B (Lower Finish Panel)
IL	24	
3A	29	Instrument Panel Wire and RH J/B (Right Side of the Instrument Panel Reinforcement)
4C	32	Instrument Panel Wire and Center J/B (Behind the Combination Meter)

▭ : **Connector Joining Wire Harness and Wire Harness**

Code	See Page	Joining Wire Harness and Wire Harness (Connector Location)
IA2	44	Engine Room Main Wire and Instrument Panel Wire (Instrument Panel Reinforcement LH)
IC1	44	Front Door LH Wire and Instrument Panel Wire (Left Kick Panel)
IH2	45	Front Door RH Wire and Instrument Panel Wire (Right Kick Panel)
IL1	45	Floor Wire and Instrument Panel Wire (Right Kick Panel)
IL2		
IL3		
BA1	46	Rear Door LH Wire and Floor Wire (Left Center Pillar)
BG1	46	Rear Door RH Wire and Floor Wire (Right Center Pillar)
BH1	46	Floor Wire and Floor Wire (Under the Right Center Pillar)

▽ : **Ground Points**

Code	See Page	Ground Points Location
IF	44	Behind Combination Meter
IG	44	Right Kick Panel

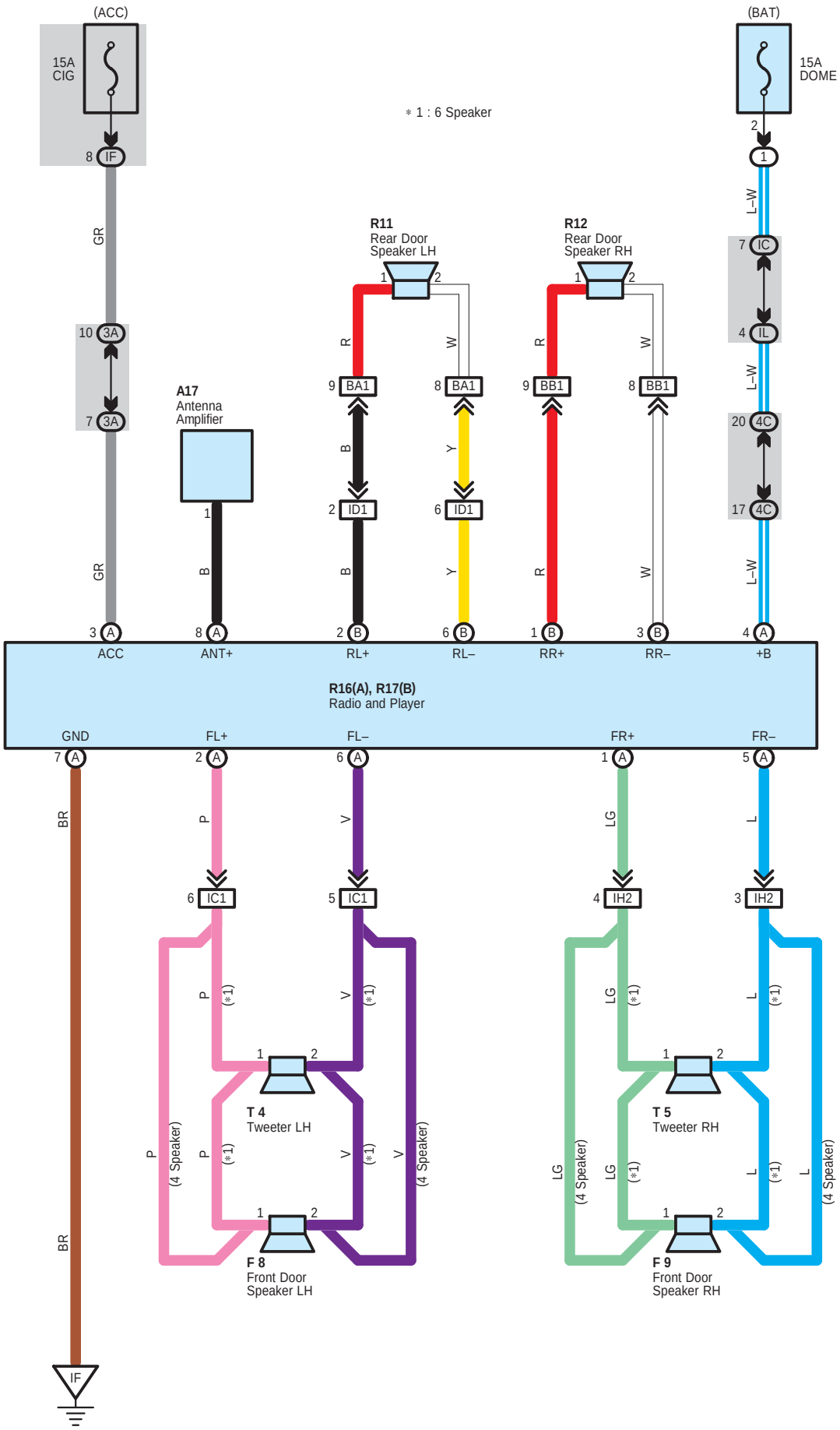
(ACC)
15A
CIG
8 IF
GR
10 3A
7 3A
GR
3 A
ACC
A17
Antenna
Amplifier
1
B
8 A
ANT+
R11
Rear Door
Speaker LH
1 2
R
W
9 BA1
8 BA1
B
Y
2 ID1
6 ID1
B
Y
2 B
RL+
6 B
RL–
R12
Rear Door
Speaker RH
1 2
R
W
9 BB1
8 BB1
R
W
1 B
RR+
3 B
RR–
(BAT)
15A
DOME
2
1
L–W
7 IC
4 IL
L–W
20 4C
17 4C
L–W
4 A
+B
∗ 1 : 6 Speaker
R16(A), R17(B)
Radio and Player
GND
FL+
FL–
FR+
FR–
7 A
2 A
6 A
1 A
5 A
BR
P
V
LG
L
6 IC1
5 IC1
4 IH2
3 IH2
P (∗1)
V (∗1)
LG (∗1)
L (∗1)
T 4
Tweeter LH
T 5
Tweeter RH
P (4 Speaker)
V (4 Speaker)
LG (4 Speaker)
L (4 Speaker)
F 8
Front Door
Speaker LH
F 9
Front Door
Speaker RH
BR
IF

: Parts Location

Code	See Page	Code	See Page	Code	See Page
A17	38	R11	41	R17 B	39
F8	40	R12	41	T4	41
F9	40	R16 A	39	T5	41

: Relay Blocks

Code	See Page	Relay Blocks (Relay Block Location)
1	23	Engine Room R/B (Engine Compartment Left)

: Junction Block and Wire Harness Connector

Code	See Page	Junction Block and Wire Harness (Connector Location)
IC	25	Engine Room Main Wire and Instrument Panel J/B (Lower Finish Panel)
IF	25	Instrument Panel Wire and Instrument Panel J/B (Lower Finish Panel)
IL	24	
3A	29	Instrument Panel Wire and RH J/B (Right Side of the Instrument Panel Reinforcement)
4C	32	Instrument Panel Wire and Center J/B (Behind the Combination Meter)

: Connector Joining Wire Harness and Wire Harness

Code	See Page	Joining Wire Harness and Wire Harness (Connector Location)
IC1	44	Front Door LH Wire and Instrument Panel Wire (Left Kick Panel)
ID1	44	Instrument Panel Wire and Floor Wire (Left Kick Panel)
IH2	45	Front Door RH Wire and Instrument Panel Wire (Right Kick Panel)
BA1	46	Rear Door LH Wire and Floor Wire (Left Center Pillar)
BB1	46	Rear Door RH Wire and Instrument Panel Wire (Right Center Pillar)

: Ground Points

Code	See Page	Ground Points Location
IF	44	Behind Combination Meter

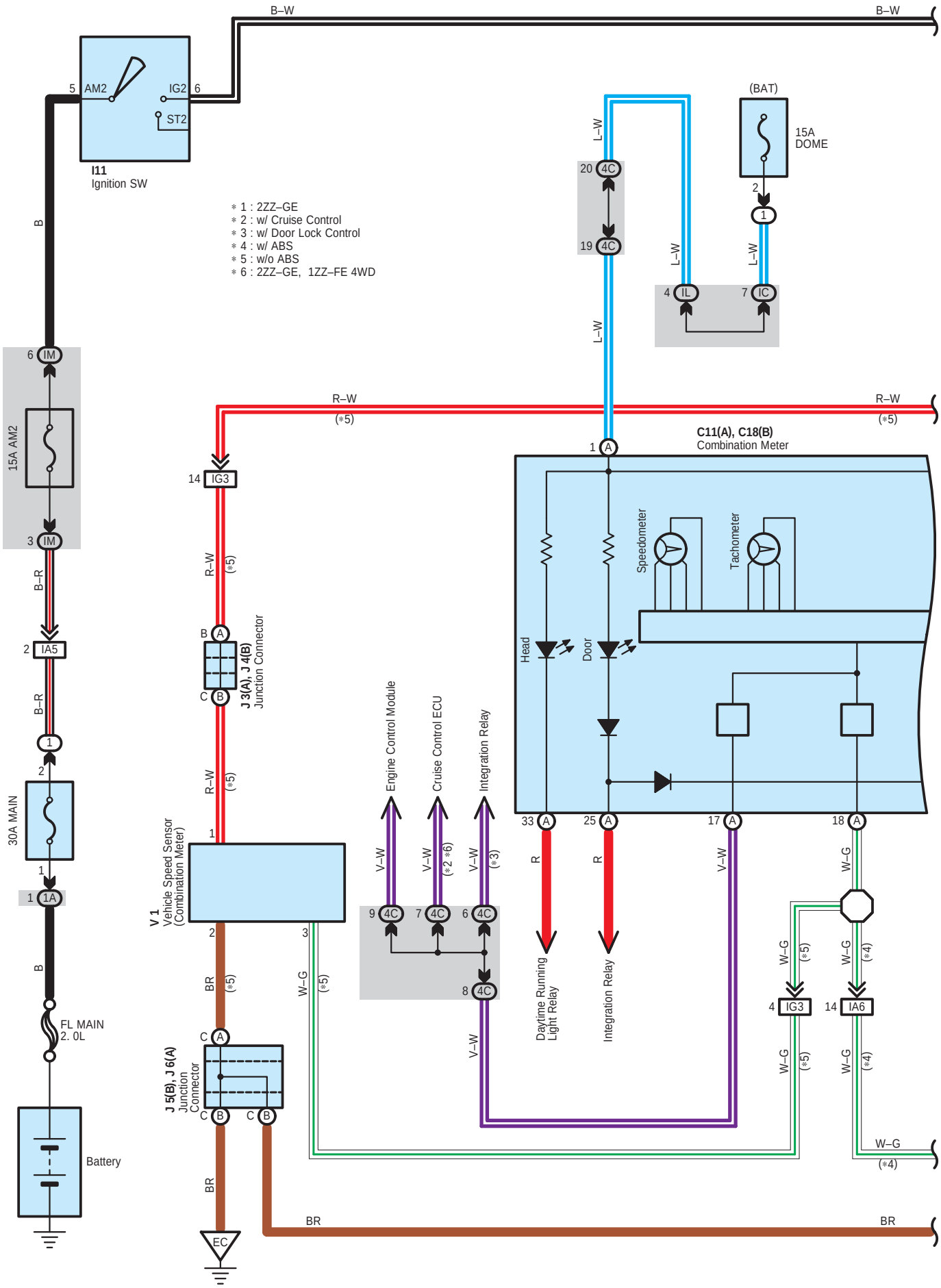
B–W
B–W
5 AM2
IG2 6
ST2
I11
Ignition SW
B
6 IM
15A AM2
3 IM
B–R
2 IA5
B–R
1
2
30A MAIN
1
1 1A
B
FL MAIN
2. 0L
Battery
＊1 : 2ZZ–GE
＊2 : w/ Cruise Control
＊3 : w/ Door Lock Control
＊4 : w/ ABS
＊5 : w/o ABS
＊6 : 2ZZ–GE, 1ZZ–FE 4WD
(BAT)
15A
DOME
2
1
L–W
20 4C
19 4C
L–W
L–W
4 IL
7 IC
L–W
R–W
(＊5)
R–W
(＊5)
1 A
C11(A), C18(B)
Combination Meter
14 IG3
R–W
(＊5)
B A
C B
J 3(A), J 4(B)
Junction Connector
R–W
(＊5)
1
V 1
Vehicle Speed Sensor
(Combination Meter)
2
3
BR
(＊5)
W–G
(＊5)
C A
J 5(B), J 6(A)
Junction
Connector
C B
C B
BR
EC
Engine Control Module
Cruise Control ECU
Integration Relay
V–W
V–W
(＊2 ＊6)
V–W
(＊3)
9 4C
7 4C
6 4C
8 4C
V–W
Head
Door
Speedometer
Tachometer
33 A
25 A
17 A
18 A
R
R
V–W
W–G
Daytime Running
Light Relay
Integration Relay
W–G
(＊5)
W–G
(＊4)
4 IG3
14 IA6
W–G
(＊5)
W–G
(＊4)
W–G
(＊4)
BR
BR

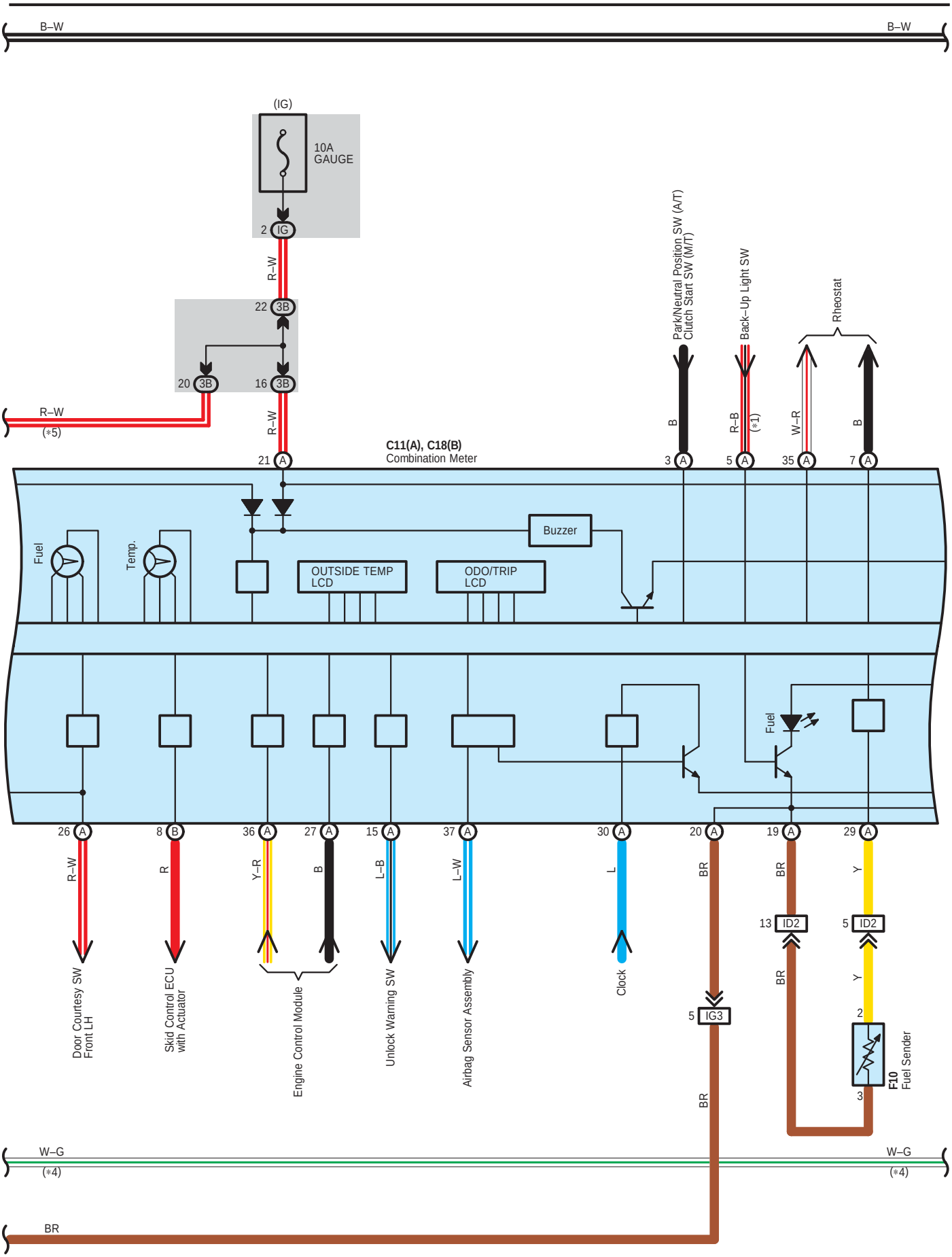
B–W
B–W
(IG)
10A
GAUGE
2 IG
R–W
22 3B
20 3B
16 3B
R–W
(*5)
R–W
21 A
C11(A), C18(B)
Combination Meter
Park/Neutral Position SW (A/T)
Clutch Start SW (M/T)
Back–Up Light SW
Rheostat
B
3 A
R–B
(*1)
5 A
W–R
35 A
B
7 A
Fuel
Temp.
Buzzer
OUTSIDE TEMP
LCD
ODO/TRIP
LCD
Fuel
26 A
8 B
36 A
27 A
15 A
37 A
30 A
20 A
19 A
29 A
R–W
R
Y–R
B
L–B
L–W
L
BR
BR
Y
13 ID2
5 ID2
Door Courtesy SW
Front LH
Skid Control ECU
with Actuator
Engine Control Module
Unlock Warning SW
Airbag Sensor Assembly
Clock
5 IG3
BR
BR
Y
2
3
F10
Fuel Sender
W–G
(*4)
W–G
(*4)
BR

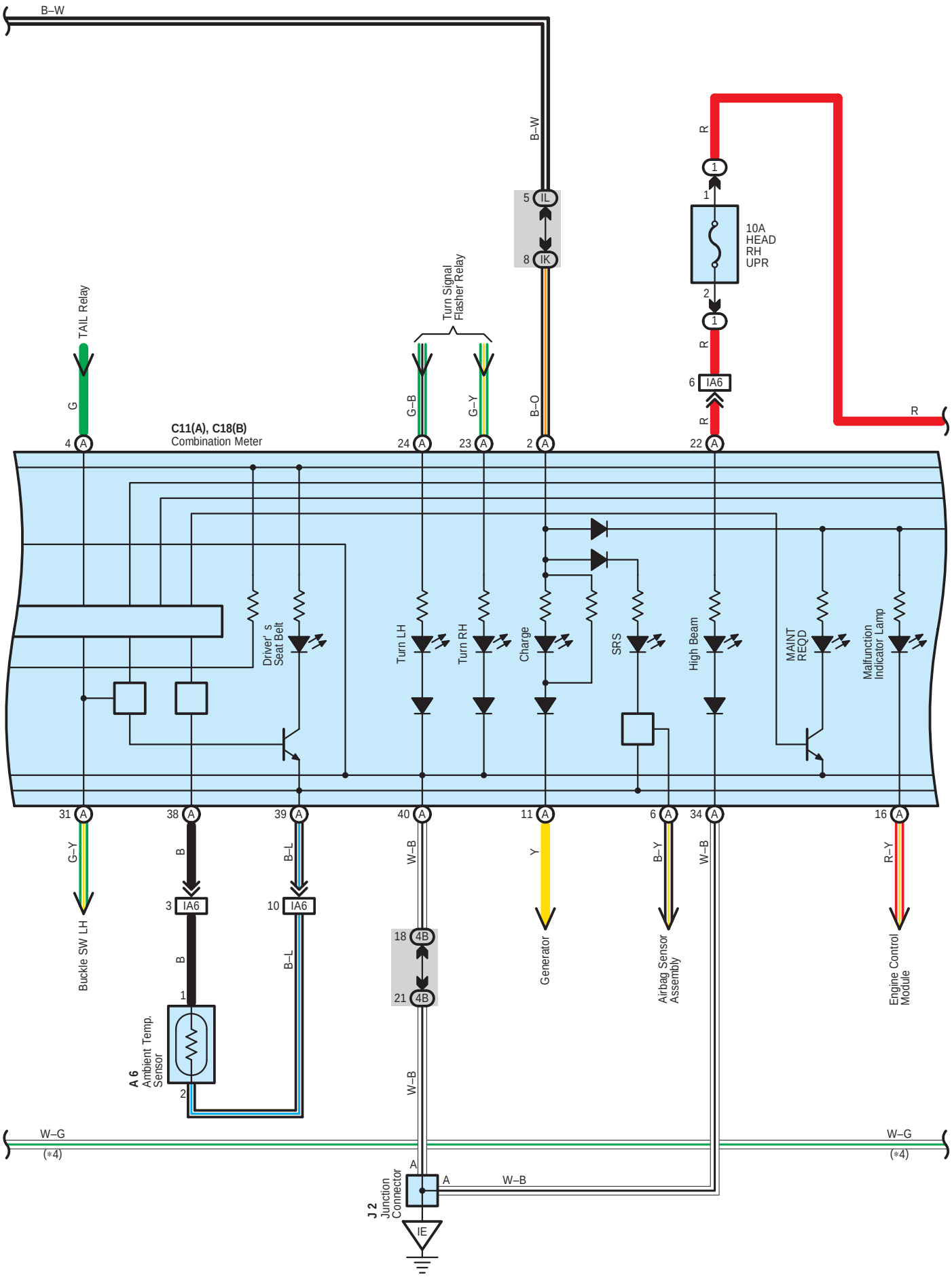
B–W
B–W
5 IL
8 IK
R
1
1
10A
HEAD
RH
UPR
2
1
R
6 IA6
R
R
TAIL Relay
G
Turn Signal
Flasher Relay
G–B
G–Y
B–O
C11(A), C18(B)
Combination Meter
4 A
24 A
23 A
2 A
22 A
Driver' s
Seat Belt
Turn LH
Turn RH
Charge
SRS
High Beam
MAINT
REQD
Malfunction
Indicator Lamp
31 A
38 A
39 A
40 A
11 A
6 A
34 A
16 A
G–Y
B
B–L
W–B
Y
B–Y
W–B
R–Y
3 IA6
10 IA6
18 4B
21 4B
Buckle SW LH
B
B–L
Generator
Airbag Sensor
Assembly
Engine Control
Module
1
A 6
Ambient Temp.
Sensor
2
W–B
W–G
(*4)
W–G
(*4)
A
A
W–B
J 2
Junction
Connector
IE

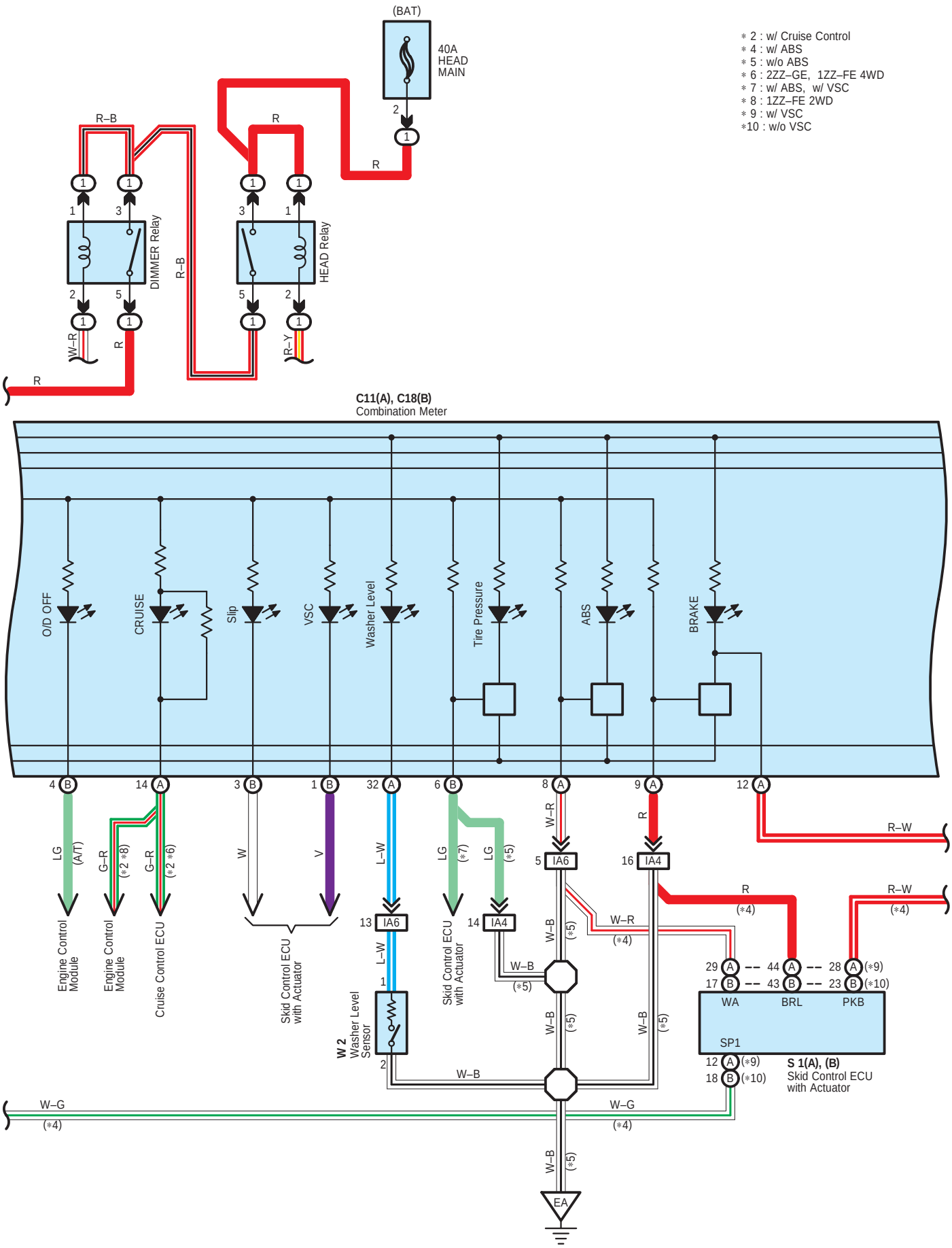

* 2 : w/ Cruise Control
* 4 : w/ ABS
* 5 : w/o ABS
* 6 : 2ZZ–GE, 1ZZ–FE 4WD
* 7 : w/ ABS, w/ VSC
* 8 : 1ZZ–FE 2WD
* 9 : w/ VSC
*10 : w/o VSC

∗ 4 : w/ ABS
∗ 5 : w/o ABS

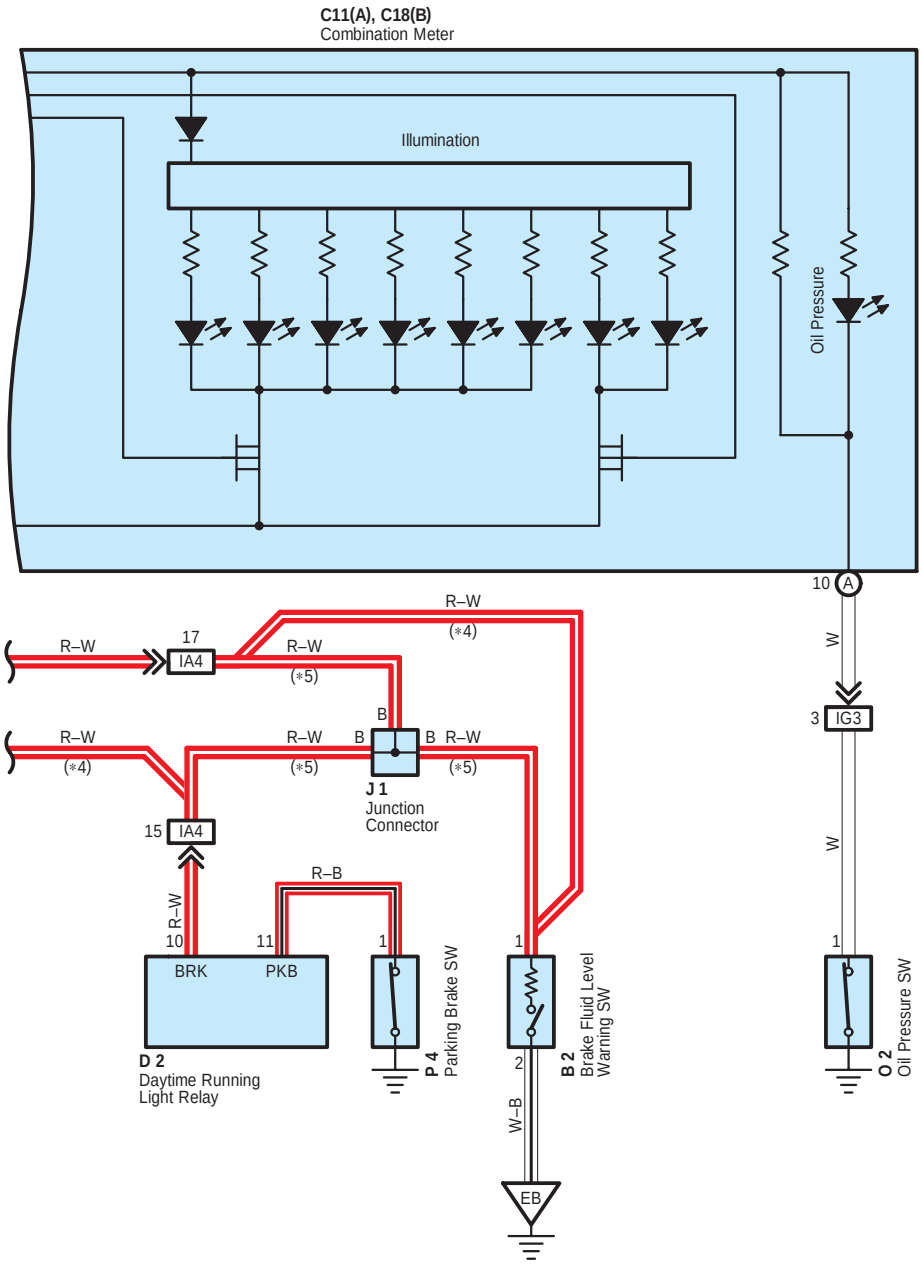

○ : Parts Location

Code	See Page	Code	See Page	Code	See Page
A6	34 (2ZZ–GE)	J1	35 (2ZZ–GE)	P4	39
	36 (1ZZ–FE)		37 (1ZZ–FE)	S1 A	37 (1ZZ–FE)
B2	34 (2ZZ–GE)	J2	39	S1 B	35 (2ZZ–GE)
	36 (1ZZ–FE)	J3 A	39		37 (1ZZ–FE)
C11 A	38	J4 B	39	V1	37 (1ZZ–FE)
C18 B	38	J5 B	39	W2	35 (2ZZ–GE)
D2	38	J6 A	39		37 (1ZZ–FE)
F10	40	O2	35 (2ZZ–GE)		
I11	39		37 (1ZZ–FE)		

: Relay Blocks

Code	See Page	Relay Blocks (Relay Block Location)
1	23	Engine Room R/B (Engine Compartment Left)

: Junction Block and Wire Harness Connector

Code	See Page	Junction Block and Wire Harness (Connector Location)
IC	25	Engine Room Main Wire and Instrument Panel J/B (Lower Finish Panel)
IG	25	Instrument Panel Wire and Instrument Panel J/B (Lower Finish Panel)
IK	24	
IL		
IM		
1A	23	Engine Wire and Engine Room J/B (Engine Compartment Left)
3B	29	Instrument Panel Wire and RH J/B (Right Side of the Instrument Panel Reinforcement)
4B	32	Instrument Panel Wire and Center J/B (Behind the Combination Meter)
4C		

: Connector Joining Wire Harness and Wire Harness

Code	See Page	Joining Wire Harness and Wire Harness (Connector Location)
IA4	44	Engine Room Main Wire and Instrument Panel Wire (Instrument Panel Reinforcement LH)
IA5		
IA6		
ID2	44	Instrument Panel Wire and Floor Wire (Left Kick Panel)
IG3	45	Engine Wire and Instrument Panel Wire (Blower Unit RH)

: Ground Points

Code	See Page	Ground Points Location
EA	42 (2ZZ–GE)	Front Right Fender
	43 (1ZZ–FE)	
EB	42 (2ZZ–GE)	Front Left Suspension Tower
	43 (1ZZ–FE)	
EC	42 (2ZZ–GE)	Left Side of the Cylinder Head
	43 (1ZZ–FE)	
IE	44	Behind Combination Meter

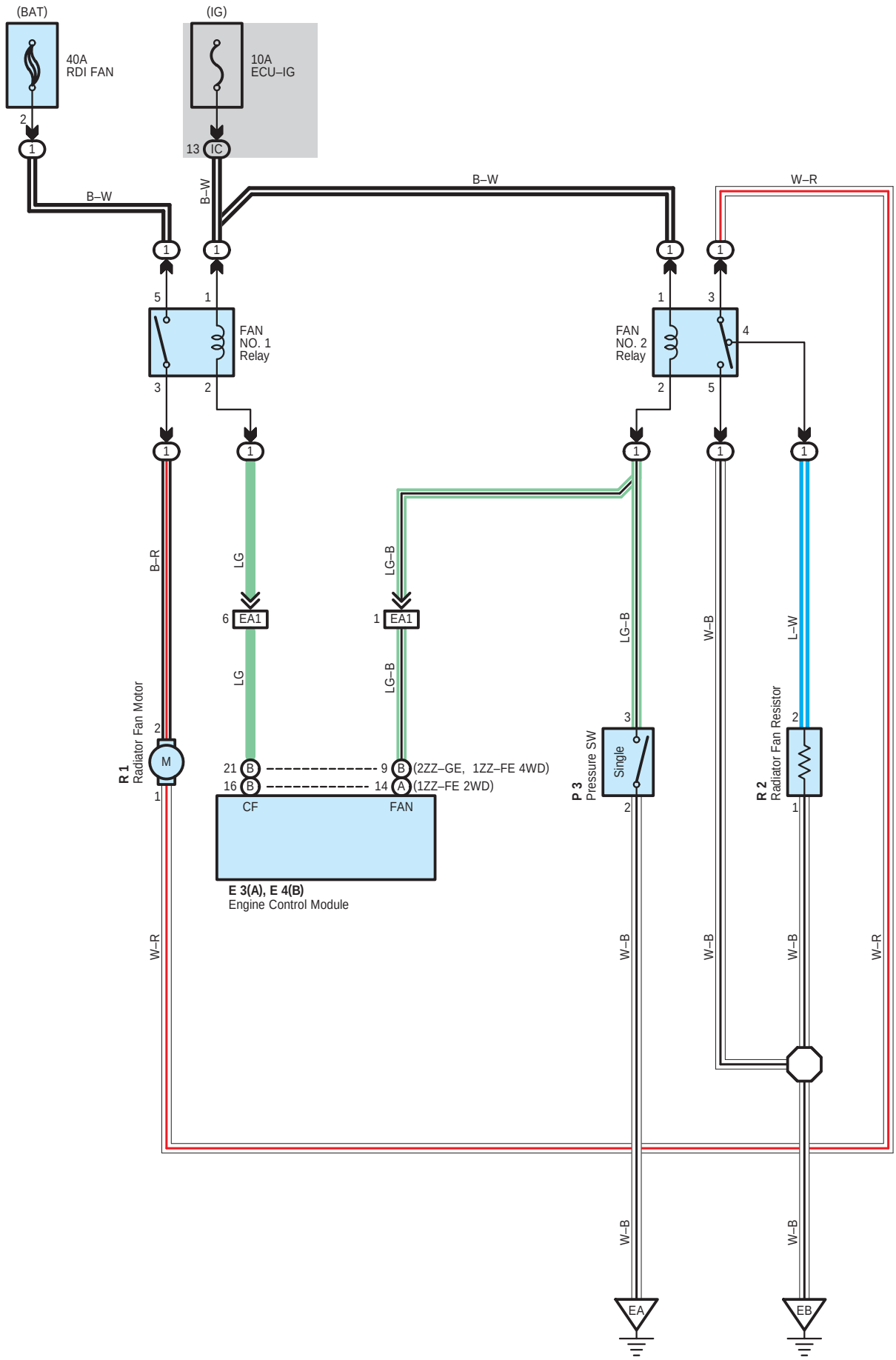
(BAT)
40A
RDI FAN
(IG)
10A
ECU–IG
13 IC
B–W
B–W
B–W
W–R
FAN
NO. 1
Relay
FAN
NO. 2
Relay
B–R
LG
LG–B
6 EA1
1 EA1
LG
LG–B
LG–B
W–B
L–W
R 1
Radiator Fan Motor
M
21 B
16 B
9 B (2ZZ–GE, 1ZZ–FE 4WD)
14 A (1ZZ–FE 2WD)
CF
FAN
E 3(A), E 4(B)
Engine Control Module
P 3
Pressure SW
Single
R 2
Radiator Fan Resistor
W–R
W–B
W–B
W–B
W–R
W–B
W–B
EA
EB

System Outline

The current is applied at all times through the RDI FAN fuse to TERMINAL 5 of the FAN NO.1 relay.
When the ignition SW is turned on, the current flows through the ECU–IG fuse to FAN NO.1 relay (Coil side) to TERMINAL CF of the engine control module. At the same time as this current flow, the current from ECU–IG fuse flows to the FAN NO.2 relay (Coil side) to TERMINAL 3 of the pressure SW.

1. Low Speed Operation

When the A/C system is operating, the FAN NO.1 Relay is turned on. As a result, the current flows from the RDI FAN fuse to FAN NO.1 relay (Point side) to TERMINAL 2 of the radiator fan motor to TERMINAL 1 to TERMINAL 3 of the FAN NO.2 relay to TERMINAL 4 to TERMINAL 2 of the radiator fan resistor to TERMINAL 1 to GROUND, and the radiator fan motor rotates at low speed.

2. High Speed Operation

When the pressure SW is on or engine control module operated, the FAN NO.1 and NO.2 relay is turned on. As a result, the current flows from the RDI FAN fuse to FAN NO.1 relay (Point side) to radiator fan motor to TERMINAL 3 of the FAN NO.2 Relay to TERMINAL 5 to GROUND, and the radiator fan motor rotates at high speed.

: Parts Location

Code		See Page	Code	See Page	Code	See Page
E3	A	38	P3	37 (1ZZ–FE)	R2	35 (2ZZ–GE)
E4	B	38	R1	35 (2ZZ–GE)		37 (1ZZ–FE)
P3		35 (2ZZ–GE)		37 (1ZZ–FE)		

: Relay Blocks

Code	See Page	Relay Blocks (Relay Block Location)
1	23	Engine Room R/B (Engine Compartment Left)

: Junction Block and Wire Harness Connector

Code	See Page	Junction Block and Wire Harness (Connector Location)
IC	25	Engine Room Main Wire and Instrument Panel J/B (Lower Finish Panel)

: Connector Joining Wire Harness and Wire Harness

Code	See Page	Joining Wire Harness and Wire Harness (Connector Location)
EA1	42 (2ZZ–GE)	Engine Wire and Engine Room Main Wire (Inside of the Engine Room R/B)
	43 (1ZZ–FE)	

: Ground Points

Code	See Page	Ground Points Location
EA	42 (2ZZ–GE)	Front Right Fender
	43 (1ZZ–FE)	
EB	42 (2ZZ–GE)	Front Left Suspension Tower
	43 (1ZZ–FE)	

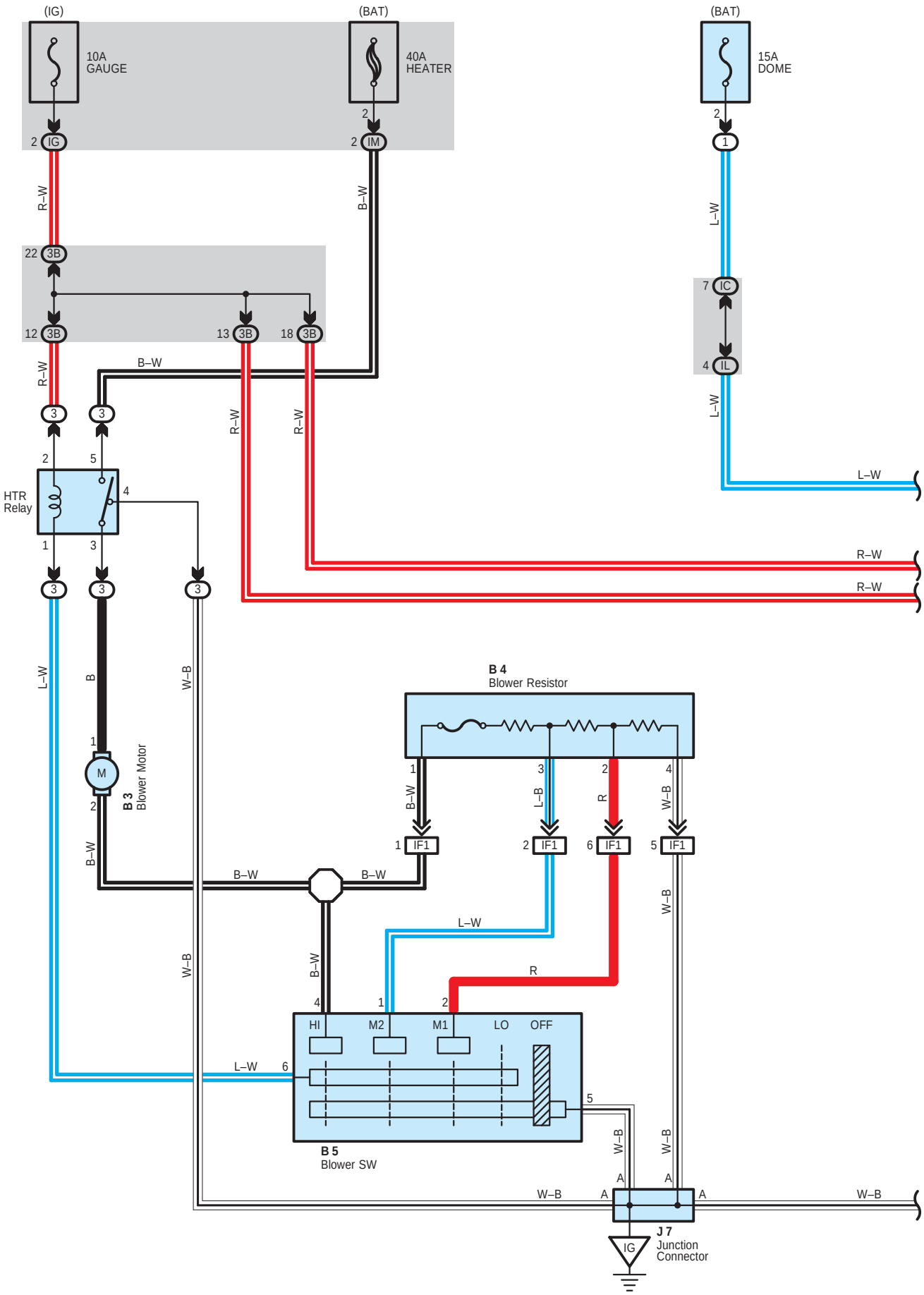
(IG)
10A
GAUGE
(BAT)
40A
HEATER
(BAT)
15A
DOME
2 IG
2 IM
2
1
R–W
B–W
L–W
22 3B
12 3B
13 3B
18 3B
7 IC
4 IL
B–W
R–W
R–W
L–W
3
3
2
5
4
HTR
Relay
1
3
R–W
R–W
3
3
3
L–W
B
W–B
1
M
2
B 3
Blower Motor
B–W
B 4
Blower Resistor
1
3
2
4
B–W
L–B
R
W–B
1 IF1
2 IF1
6 IF1
5 IF1
B–W
B–W
W–B
L–W
W–B
R
4
1
2
HI
M2
M1
LO
OFF
L–W
6
5
B 5
Blower SW
W–B
W–B
A
A
W–B
A
A
W–B
IG
J 7
Junction
Connector

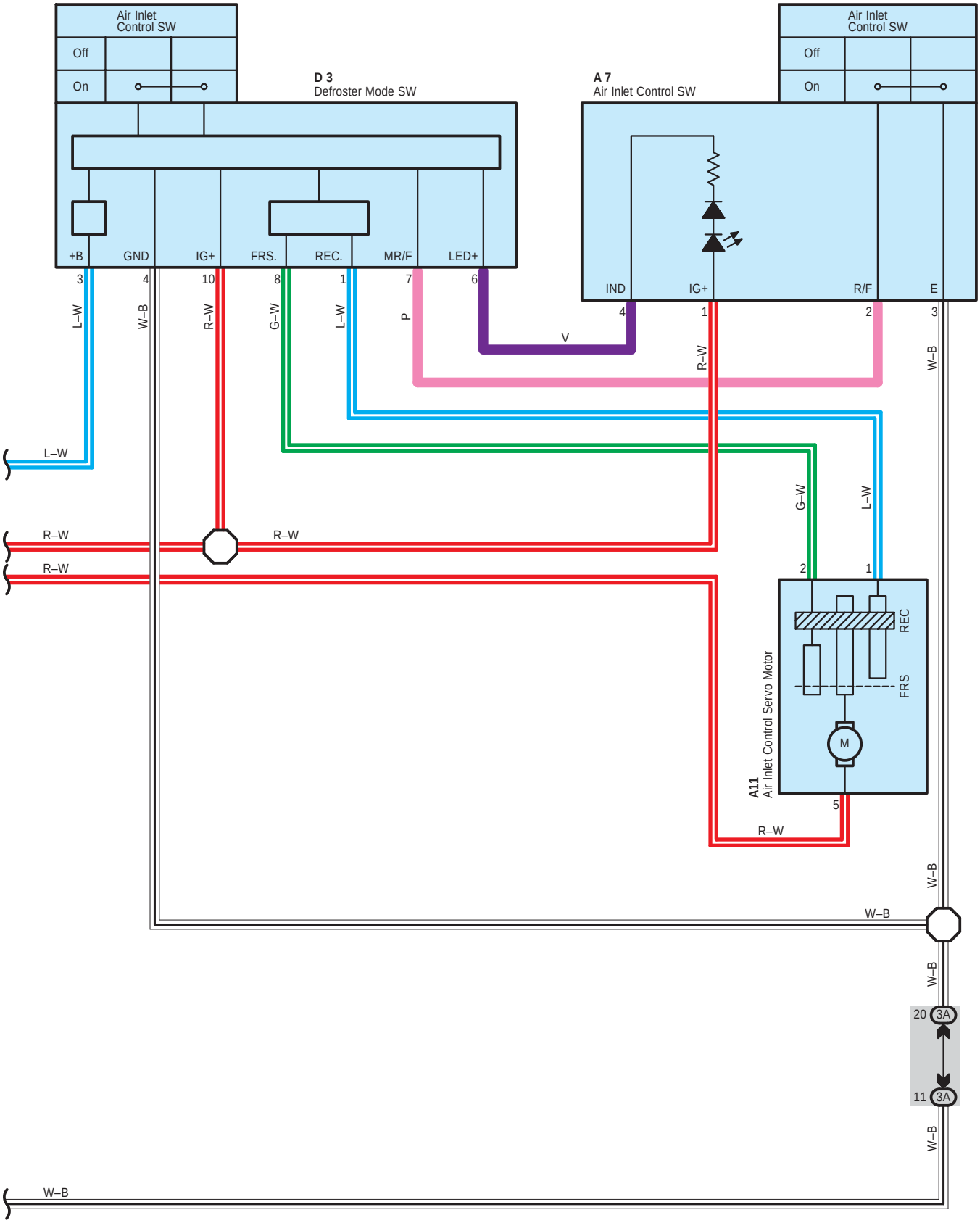
Air Inlet
Control SW
Off
On
D 3
Defroster Mode SW
+B
GND
IG+
FRS.
REC.
MR/F
LED+
3
4
10
8
1
7
6
L–W
W–B
R–W
G–W
L–W
P
V
A 7
Air Inlet Control SW
Air Inlet
Control SW
Off
On
IND
IG+
R/F
E
4
1
2
3
R–W
W–B
L–W
R–W
R–W
R–W
G–W
L–W
2
1
REC
FRS
M
A11
Air Inlet Control Servo Motor
5
R–W
W–B
W–B
W–B
20
3A
11
3A
W–B
W–B

System Outline

Current is applied at all times through the HEATER fuse to TERMINAL 5 of the HTR relay.
When the ignition SW is turned on, the current flows through the GAUGE fuse to TERMINAL 2 of the HTR relay to TERMINAL 1 to TERMINAL 6 of the blower SW.

1. Heater Blower Motor Operation

∗ Low speed operation
When the blower SW is moved to LO position, the current flows to TERMINAL 6 of the blower SW to TERMINAL 5 to GROUND, causing the HTR relay to turn on. This causes the current flows from the HEATER fuse to TERMINAL 5 of the HTR relay to TERMINAL 3 to the blower motor to the blower resistor to GROUND, rotating the blower motor at low speed.

∗ Medium speed operation (Operation at M1, M2)
When the blower SW is moved to M1 position, the current flows to TERMINAL 6 of the blower SW to TERMINAL 5 to GROUND, causing the HTR relay to turn on. This causes the current flows from the HEATER fuse to TERMINAL 5 of the HTR relay to TERMINAL 3 to the blower motor to the blower resistor to TERMINAL 2 of the blower SW to TERMINAL 5 to GROUND. At this time, the blower resistance of the blower resistor is smaller than at low speed, so the blower motor rotates at medium low speed.
When the blower SW is moved to M2 position, the current flows through the HTR relay to the blower motor to the blower resistor to TERMINAL 1 of the blower SW to TERMINAL 5 to GROUND. At this time, resistance of the blower resistor is smaller than at M1 position, so the blower motor rotates at medium high speed.

∗ High speed operation
When the blower SW is moved to HI position, the current flows to TERMINAL 6 of the blower SW to TERMINAL 5 to GROUND, causing the HTR relay to turn on.
This causes the current flows from the HEATER fuse to TERMINAL 5 of the HTR relay to TERMINAL 3 to the blower motor to TERMINAL 4 of the blower SW to TERMINAL 5 to GROUND, rotating the blower motor at high speed.

○ : Parts Location

Code	See Page	Code	See Page	Code	See Page
A7	38	B4	38	J7	39
A11	38	B5	38		
B3	38	D3	38		

▭ : Relay Blocks

Code	See Page	Relay Blocks (Relay Block Location)
1	23	Engine Room R/B (Engine Compartment Left)
3	28	RH R/B (Right Side of the Instrument Panel Reinforcement)

▭ : Junction Block and Wire Harness Connector

Code	See Page	Junction Block and Wire Harness (Connector Location)
IC	25	Engine Room Main Wire and Instrument Panel J/B (Lower Finish Panel)
IG	25	Instrument Panel Wire and Instrument Panel J/B (Lower Finish Panel)
IL	24	
IM		
3A	29	Instrument Panel Wire and RH J/B (Right Side of the Instrument Panel Reinforcement)
3B		

▭ : Connector Joining Wire Harness and Wire Harness

Code	See Page	Joining Wire Harness and Wire Harness (Connector Location)
IF1	45	Instrument Panel Wire and A/C Sub Wire (Left Upper Side of the Blower Unit)

▽ : Ground Points

Code	See Page	Ground Points Location
IG	44	Right Kick Panel

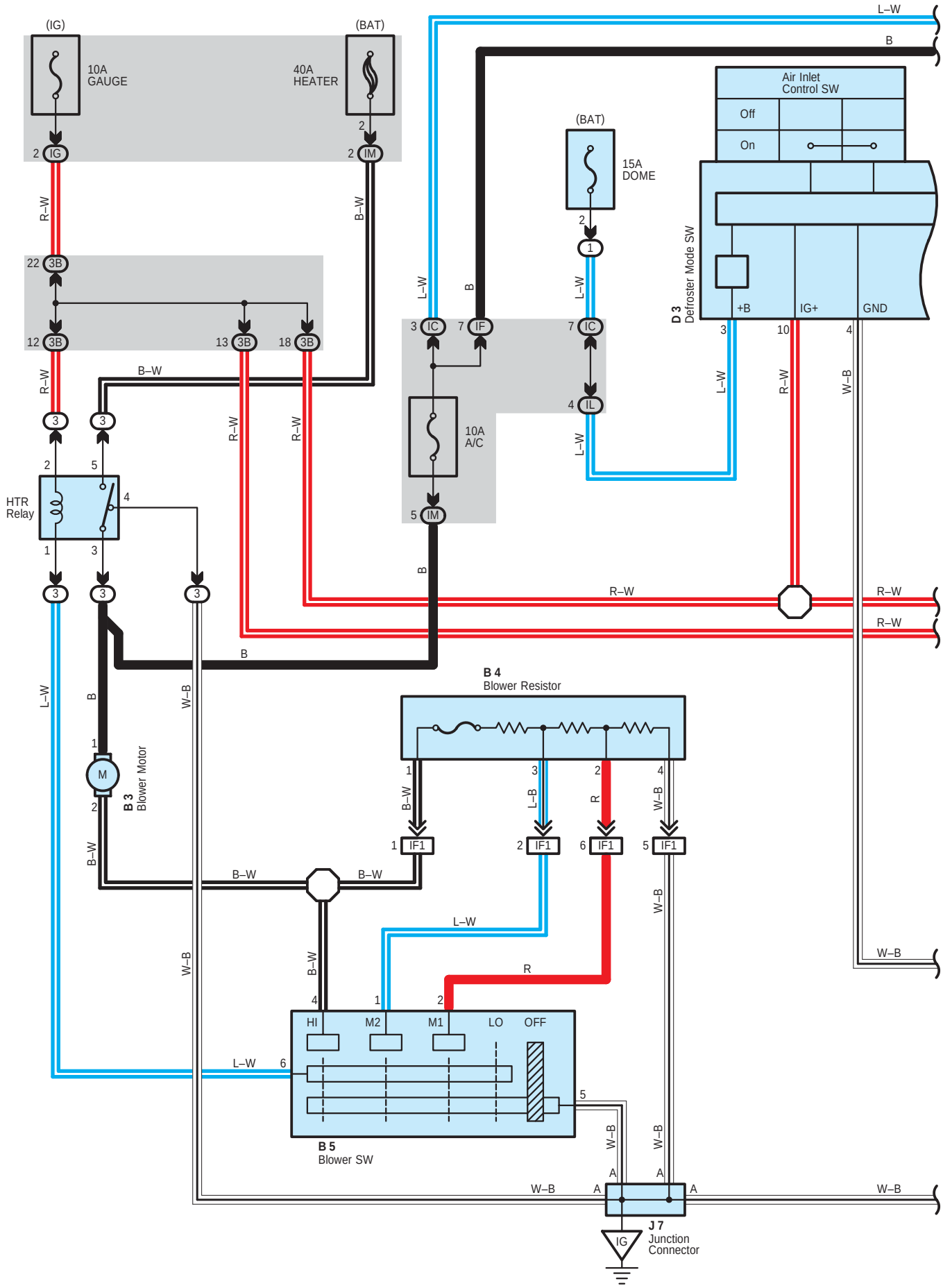
(IG)
(BAT)
10A
GAUGE
40A
HEATER
2 IG
2 IM
R–W
B–W
22 3B
12 3B
13 3B
18 3B
3
3
HTR
Relay
2
5
4
1
3
3
3
3
B–W
R–W
R–W
L–W
B
3 IC
7 IF
10A
A/C
5 IM
B
(BAT)
15A
DOME
2
1
L–W
7 IC
4 IL
L–W
L–W
B
L–W
Air Inlet
Control SW
Off
On
D 3
Defroster Mode SW
+B
IG+
GND
3
10
4
L–W
R–W
W–B
R–W
R–W
R–W
B
L–W
B
W–B
1
M
2
B 3
Blower Motor
B–W
B 4
Blower Resistor
1
3
2
4
B–W
L–B
R
W–B
1 IF1
2 IF1
6 IF1
5 IF1
B–W
B–W
L–W
W–B
W–B
R
W–B
4
1
2
HI
M2
M1
LO
OFF
L–W
6
5
B 5
Blower SW
W–B
W–B
A
A
W–B
A
A
W–B
J 7
Junction
Connector
IG

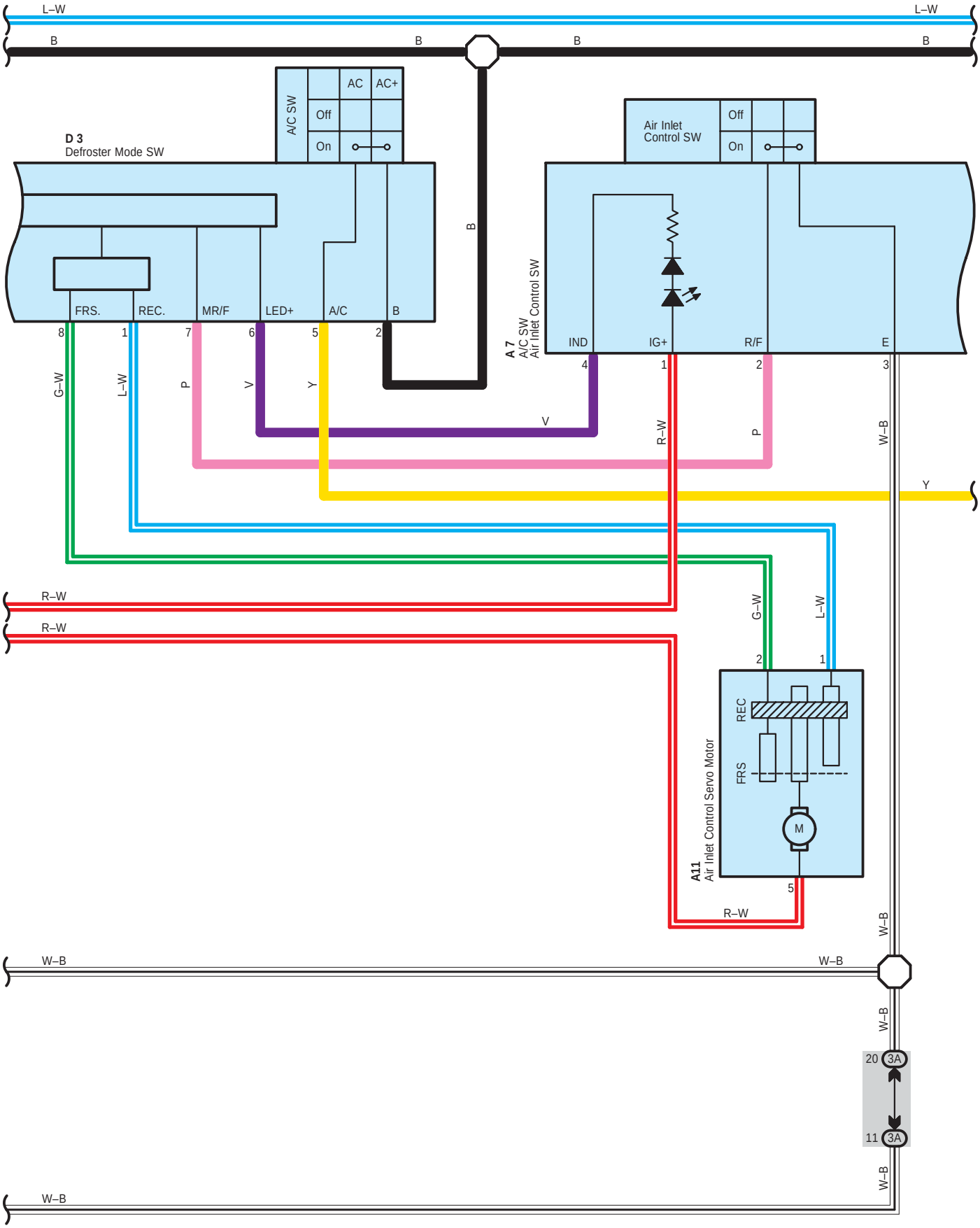
L–W
L–W
B
B
B
B
A/C SW
AC
AC+
Off
On
D 3
Defroster Mode SW
FRS.
REC.
MR/F
LED+
A/C
B
8
1
7
6
5
2
G–W
L–W
P
V
Y
B
Air Inlet
Control SW
Off
On
A 7
A/C SW
Air Inlet Control SW
IND
IG+
R/F
E
4
1
2
3
V
R–W
P
W–B
Y
R–W
R–W
G–W
L–W
2
1
A11
Air Inlet Control Servo Motor
REC
FRS
M
5
R–W
W–B
W–B
W–B
W–B
20
3A
11
3A
W–B
W–B

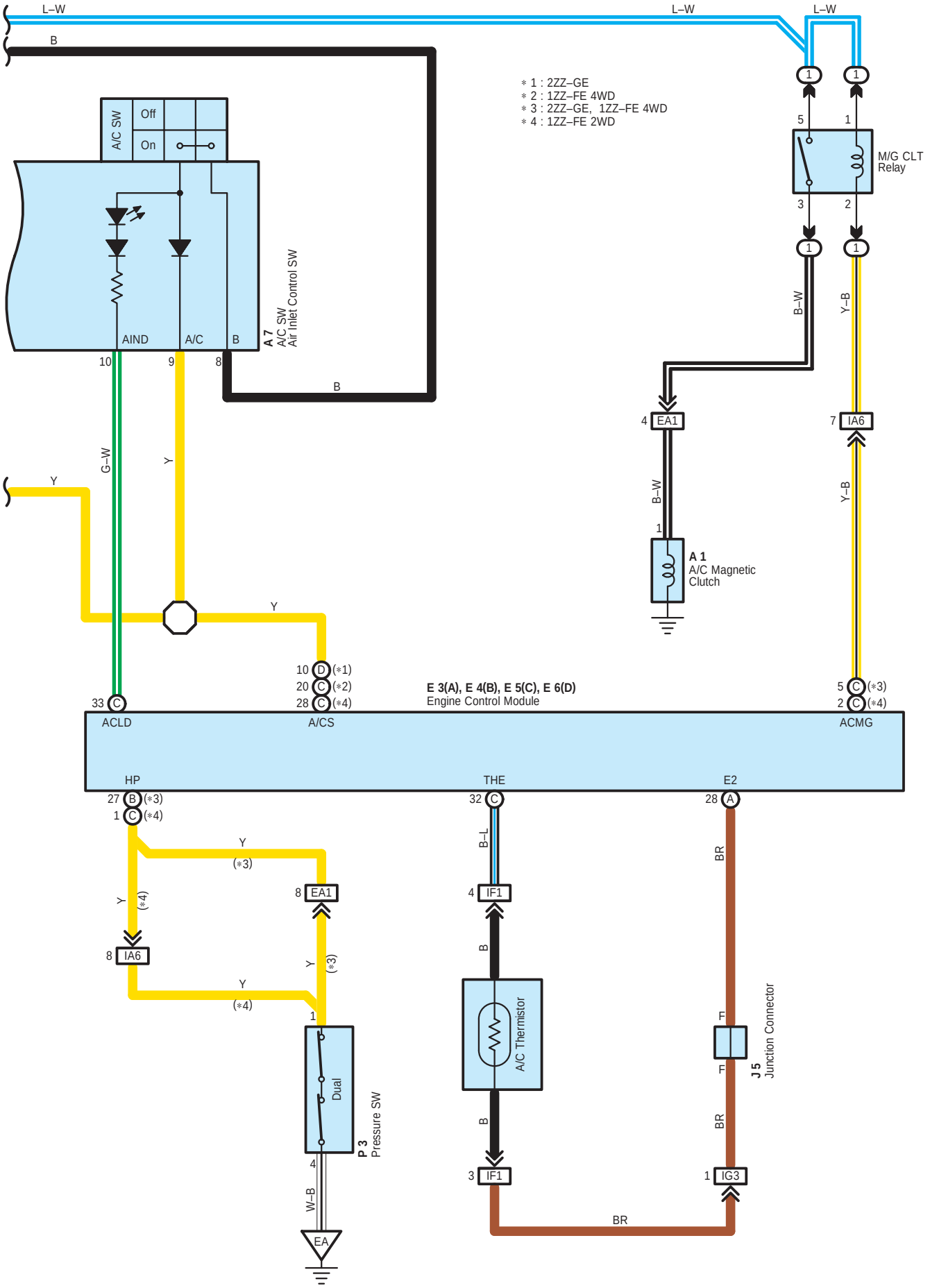
L–W
B
A/C SW
Off
On
AIND
A/C
B
A 7
A/C SW
Air Inlet Control SW
10
9
8
G–W
Y
∗1 : 2ZZ–GE
∗2 : 1ZZ–FE 4WD
∗3 : 2ZZ–GE, 1ZZ–FE 4WD
∗4 : 1ZZ–FE 2WD
M/G CLT
Relay
B–W
Y–B
EA1
IA6
A 1
A/C Magnetic
Clutch
E 3(A), E 4(B), E 5(C), E 6(D)
Engine Control Module
ACLD
A/CS
ACMG
HP
THE
E2
(∗1)
(∗2)
(∗3)
(∗4)
B–L
BR
IF1
IG3
A/C Thermistor
J 5
Junction Connector
P 3
Pressure SW
Dual
W–B
EA

System Outline

Current is applied at all times through the HEATER fuse to TERMINAL 5 of the HTR relay.
When the ignition SW is turned on, the current flows through the GAUGE fuse to TERMINAL 2 of the HTR relay to TERMINAL 1 to TERMINAL 6 of the blower SW.

1. Heater Blower Motor Operation

∗ Low speed operation
When the blower SW is moved to LO position, the current flows to TERMINAL 6 of the blower SW to TERMINAL 5 to GROUND, causing the HTR relay to turn on. This causes the current flows from the HEATER fuse to TERMINAL 5 of the HTR relay to TERMINAL 3 to the blower motor to the blower resistor to GROUND, rotating the blower motor at low speed.

∗ Medium speed operation (Operation at M1, M2)
When the blower SW is moved to M1 position, the current flows to TERMINAL 6 of the blower SW to TERMINAL 5 to GROUND, causing the HTR relay to turn on. This causes the current flows from the HEATER fuse to TERMINAL 5 of the HTR relay to TERMINAL 3 to the blower motor to the blower resistor to TERMINAL 2 of the blower SW to TERMINAL 5 to GROUND. At this time, the blower resistance of the blower resistor is smaller than at low speed, so the blower motor rotates at medium low speed.
When the blower SW is moved to M2 position, the current flows through the HTR relay to the blower motor to the blower resistor to TERMINAL 1 of the blower SW to TERMINAL 5 to GROUND. At this time, resistance of the blower resistor is smaller than at M1 position, so the blower motor rotates at medium high speed.

∗ High speed operation
When the blower SW is moved to HI position, the current flows to TERMINAL 6 of the blower SW to TERMINAL 5 to GROUND, causing the HTR relay to turn on.
This causes the current flows from the HEATER fuse to TERMINAL 5 of the HTR relay to TERMINAL 3 to the blower motor to TERMINAL 4 of the blower SW to TERMINAL 5 to GROUND, rotating the blower motor at high speed.

2. Air Conditioning Operation

When the blower SW is set on, the current flows from the HEATER fuse to the HTR relay (Point side) to the A/C fuse to the TERMINAL 8 of the A/C SW and TERMINAL 2 of the defroster mode SW. If the A/C SW or the defroster mode SW is turned on, at this time a signal is input into the engine control module. This activates the engine control module and M/G CLT relay. So that current flows from the A/C fuse to M/G CLT relay (Point side) to A/C magnetic clutch. Causing the compressor to operate.

3. DEF or FOOT & DEF Synchronized Control Function

When the blower SW is on and the heater control lever (Air vent mode control lever) turned to DEF or FOOT & DEF position, it causes A/C to run and the air inlet control SW to be at FRESH position whether A/C SW is on or not.

○ : Parts Location

Code	See Page	Code	See Page	Code	See Page
A1	34 (2ZZ–GE)	B5	38	J5	39
	36 (1ZZ–FE)	D3	38	J7	39
A7	38	E3 A	38	P3	35 (2ZZ–GE)
A11	38	E4 B	38		37 (1ZZ–FE)
B3	38	E5 C	38		
B4	38	E6 D	38		

▭ : Relay Blocks

Code	See Page	Relay Blocks (Relay Block Location)
1	23	Engine Room R/B (Engine Compartment Left)
3	28	RH R/B (Right Side of the Instrument Panel Reinforcement)

: **Junction Block and Wire Harness Connector**

Code	See Page	Junction Block and Wire Harness (Connector Location)
IC	25	Engine Room Main Wire and Instrument Panel J/B (Lower Finish Panel)
IF	25	Instrument Panel Wire and Instrument Panel J/B (Lower Finish Panel)
IG		
IL	24	
IM		
3A	29	Instrument Panel Wire and RH J/B (Right Side of the Instrument Panel Reinforcement)
3B		

: **Connector Joining Wire Harness and Wire Harness**

Code	See Page	Joining Wire Harness and Wire Harness (Connector Location)
EA1	42 (2ZZ–GE)	Engine Wire and Engine Room Main Wire (Inside of the Engine Room R/B)
	43 (1ZZ–FE)	
IA6	44	Engine Room Main Wire and Instrument Panel Wire (Instrument Panel Reinforcement LH)
IF1	45	Instrument Panel Wire and A/C Sub Wire (Left Upper Side of the Blower Unit)
IG3	45	Engine Wire and Instrument Panel Wire (Blower Unit RH)

: **Ground Points**

Code	See Page	Ground Points Location
EA	42 (2ZZ–GE)	Front Right Fender
	43 (1ZZ–FE)	
IG	44	Right Kick Panel