(Cont. next page)

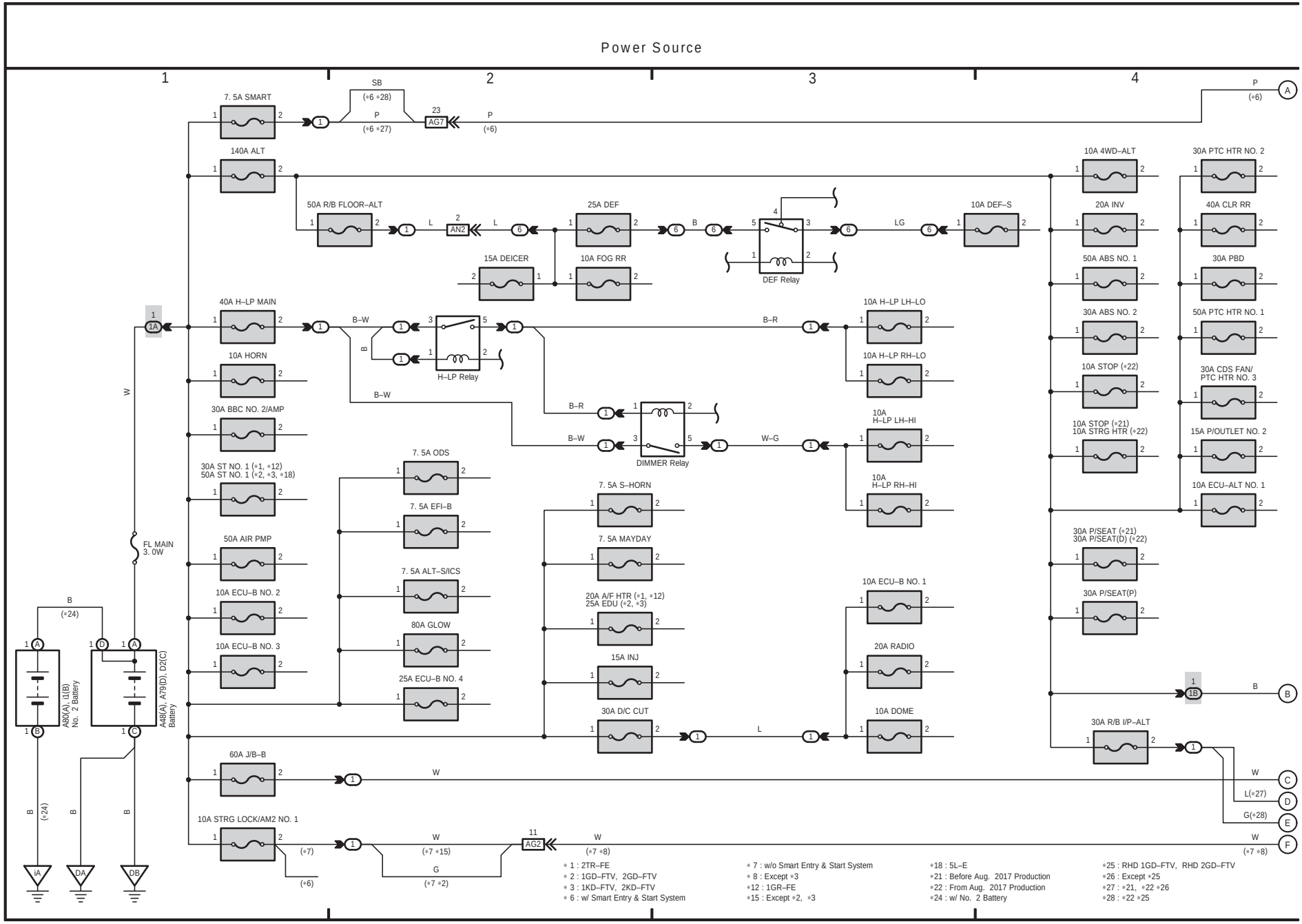

(Cont. next page)

Power Source

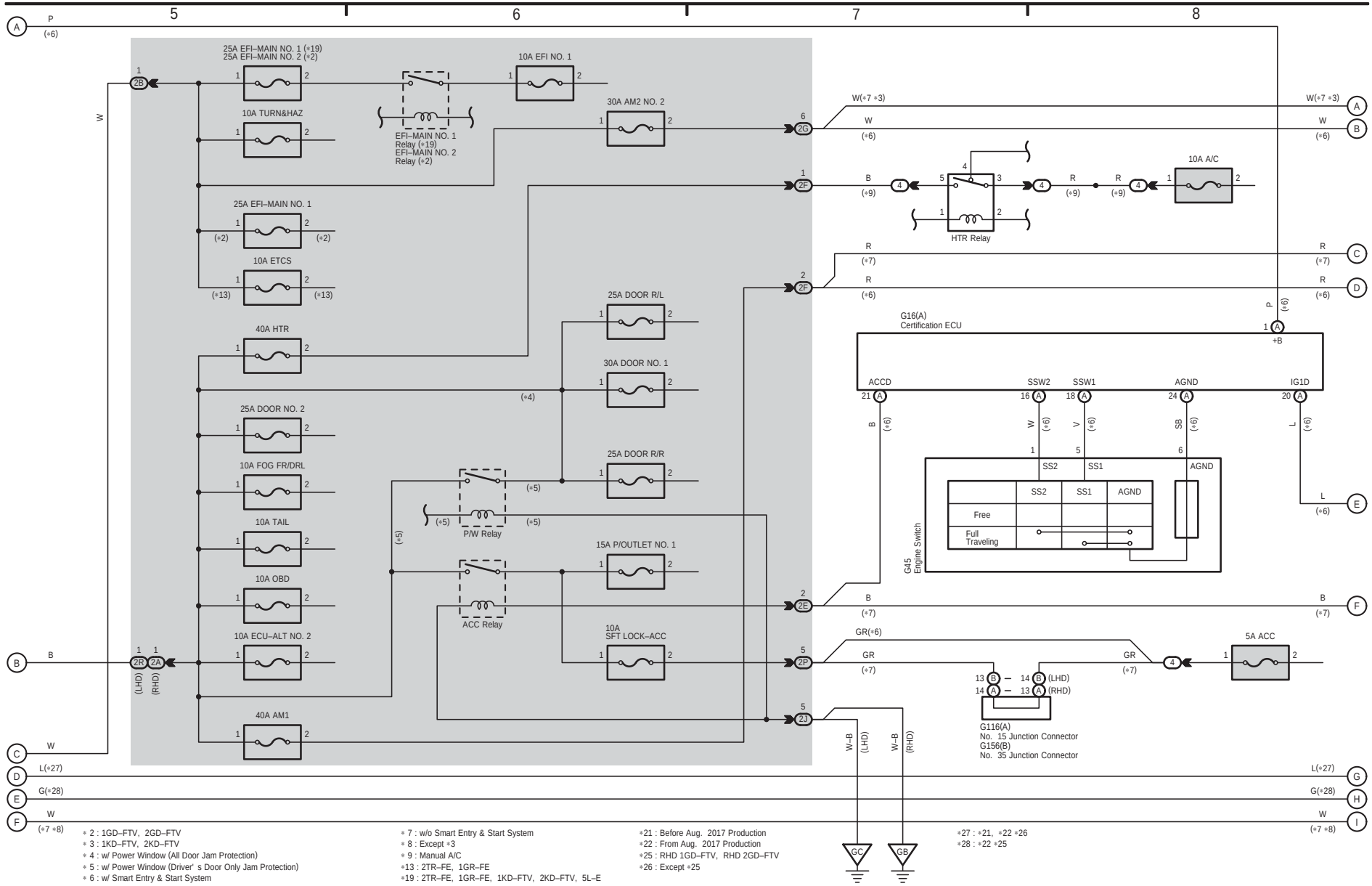

∗ 2 : 1GD–FTV, 2GD–FTV
∗ 3 : 1KD–FTV, 2KD–FTV
∗ 4 : w/ Power Window (All Door Jam Protection)
∗ 5 : w/ Power Window (Driver' s Door Only Jam Protection)
∗ 6 : w/ Smart Entry & Start System
∗ 7 : w/o Smart Entry & Start System
∗ 8 : Except ∗3
∗ 9 : Manual A/C
∗13 : 2TR–FE, 1GR–FE
∗19 : 2TR–FE, 1GR–FE, 1KD–FTV, 2KD–FTV, 5L–E
∗21 : Before Aug. 2017 Production
∗22 : From Aug. 2017 Production
∗25 : RHD 1GD–FTV, RHD 2GD–FTV
∗26 : Except ∗25
∗27 : ∗21, ∗22 ∗26
∗28 : ∗22 ∗25

Power Source
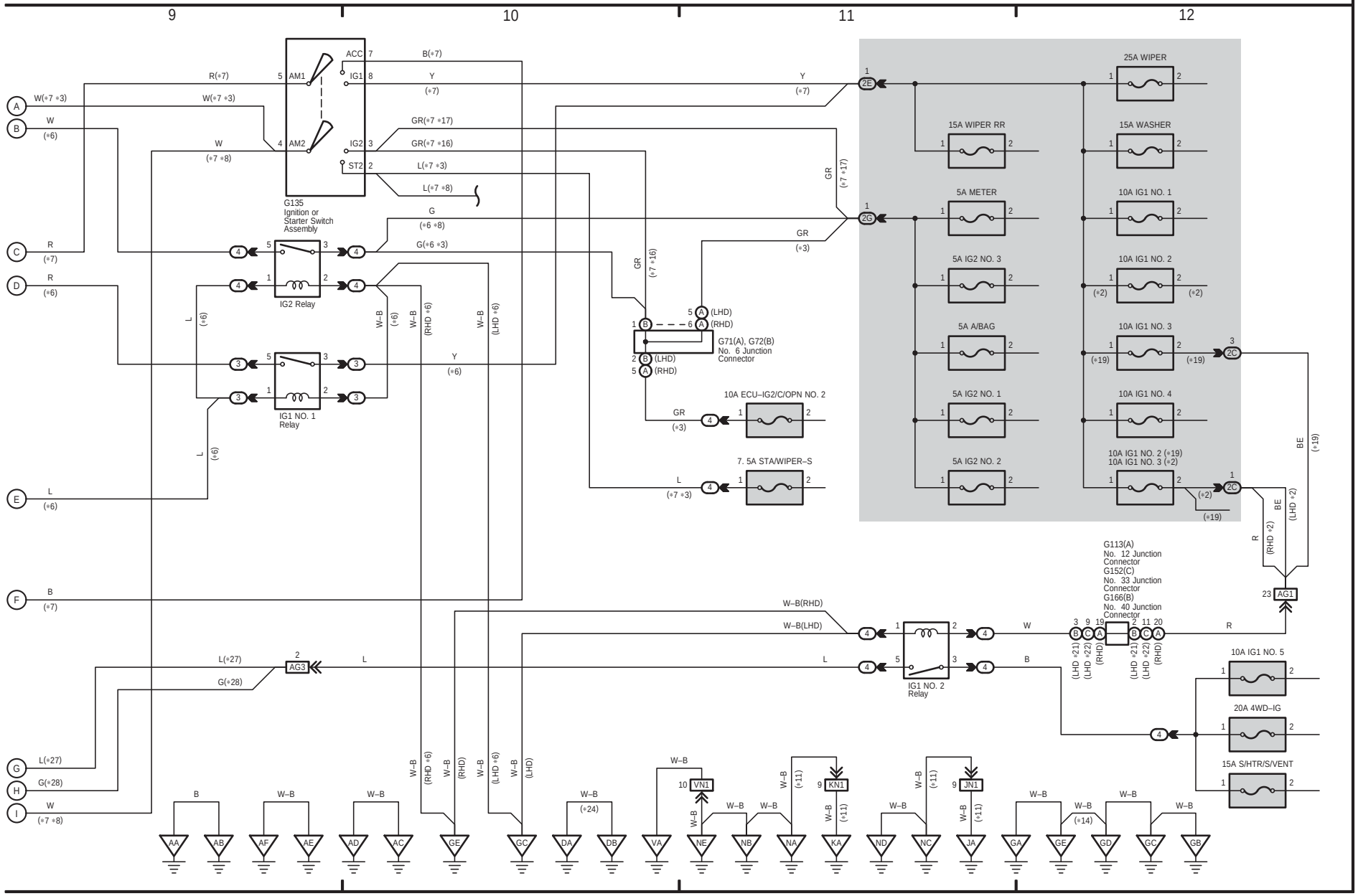
∗ 2 : 1GD–FTV, 2GD–FTV
∗ 3 : 1KD–FTV, 2KD–FTV
∗ 6 : w/ Smart Entry & Start System
∗ 7 : w/o Smart Entry & Start System
∗ 8 : Except ∗3
∗11 : w/ Curtain Shield Airbag
∗14 : w/ PTC Heater
∗16 : 1KD–FTV
∗17 : Except 1KD–FTV
∗19 : 2TR–FE, 1GR–FE, 1KD–FTV, 2KD–FTV, 5L–E
∗21 : Before Aug. 2017 Production
∗22 : From Aug. 2017 Production
∗24 : w/ No. 2 Battery
∗25 : RHD 1GD–FTV, RHD 2GD–FTV
∗26 : Except ∗25
∗27 : ∗21, ∗22 ∗26
∗28 : ∗22 ∗25