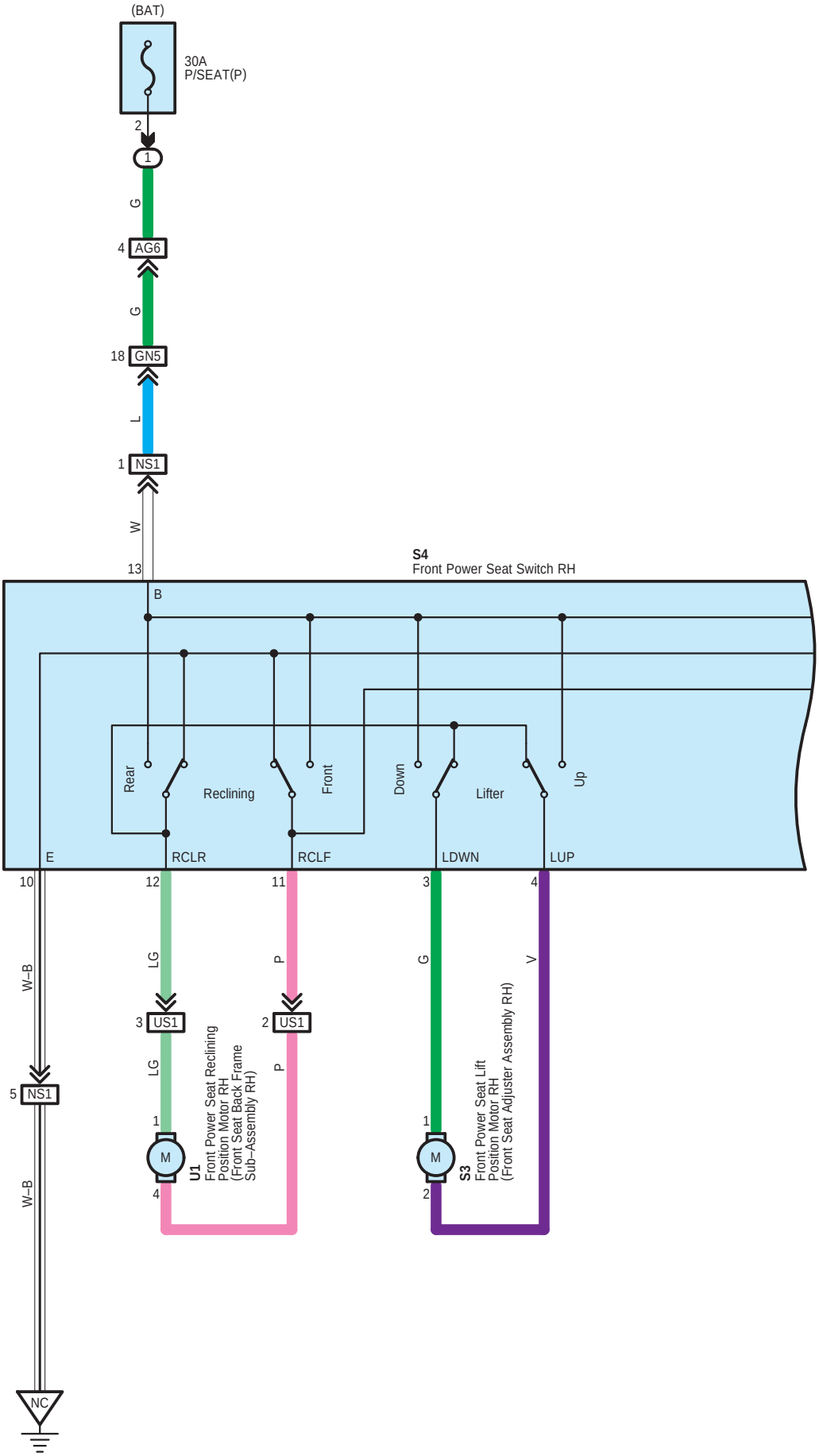
(BAT)
30A
P/SEAT(P)
2
1
G
4
AG6
G
18
GN5
L
1
NS1
W
13
S4
Front Power Seat Switch RH
B
Rear
Reclining
Front
Down
Lifter
Up
E
RCLR
RCLF
LDWN
LUP
10
12
11
3
4
W–B
LG
P
G
V
3
US1
2
US1
5
NS1
LG
P
1
M
4
U1
Front Power Seat Reclining
Position Motor RH
(Front Seat Back Frame
Sub–Assembly RH)
1
M
2
S3
Front Power Seat Lift
Position Motor RH
(Front Seat Adjuster Assembly RH)
W–B
NC

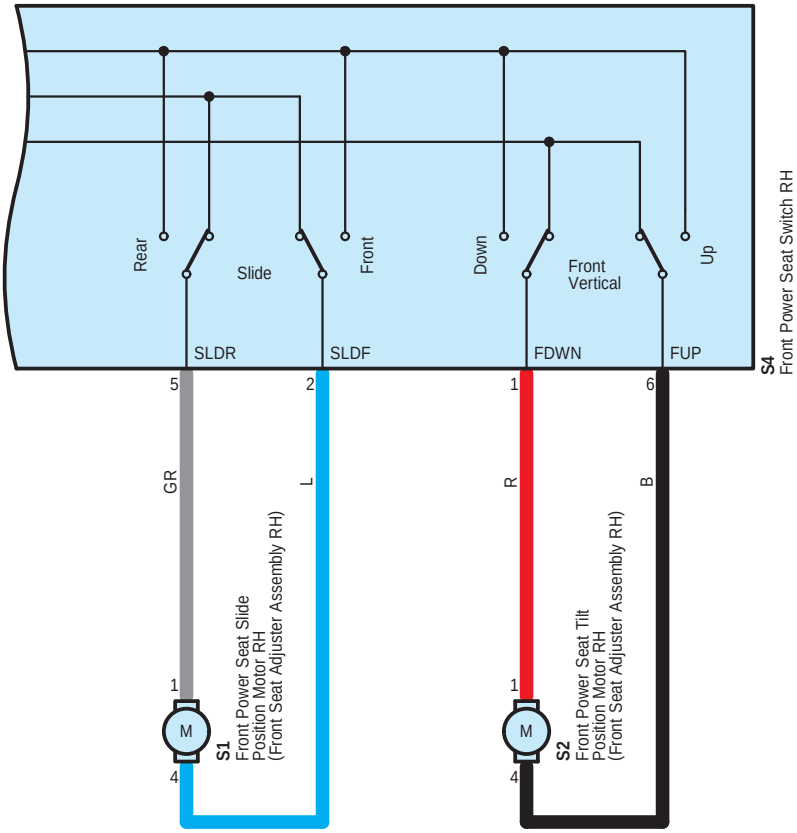
Rear
Slide
Front
Down
Front
Vertical
Up
SLDR
SLDF
FDWN
FUP
S4
Front Power Seat Switch RH
5
2
1
6
GR
L
R
B
1
4
M
S1
Front Power Seat Slide
Position Motor RH
(Front Seat Adjuster Assembly RH)
1
4
M
S2
Front Power Seat Tilt
Position Motor RH
(Front Seat Adjuster Assembly RH)
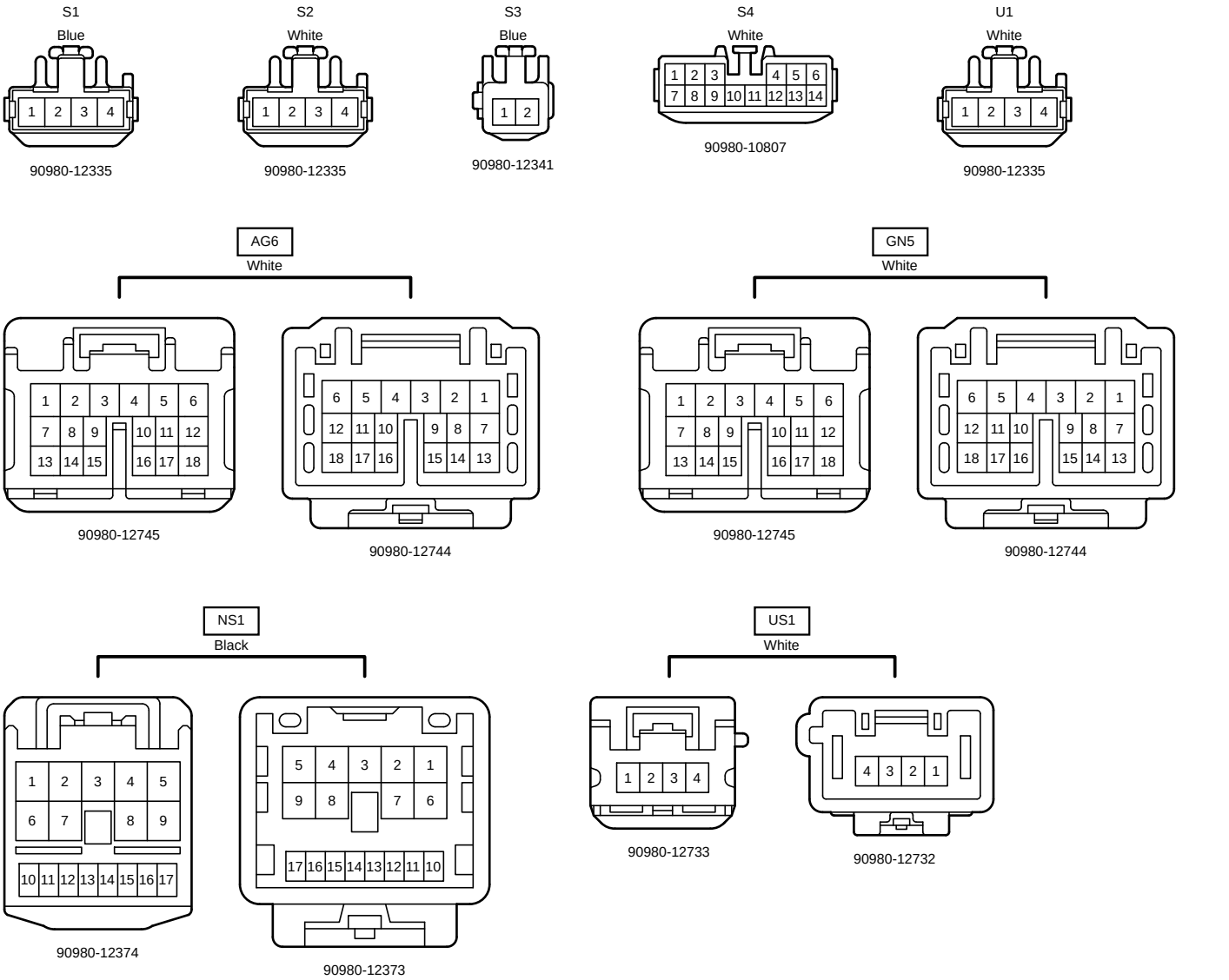
Power Seat (LHD Front Passenger's Seat)