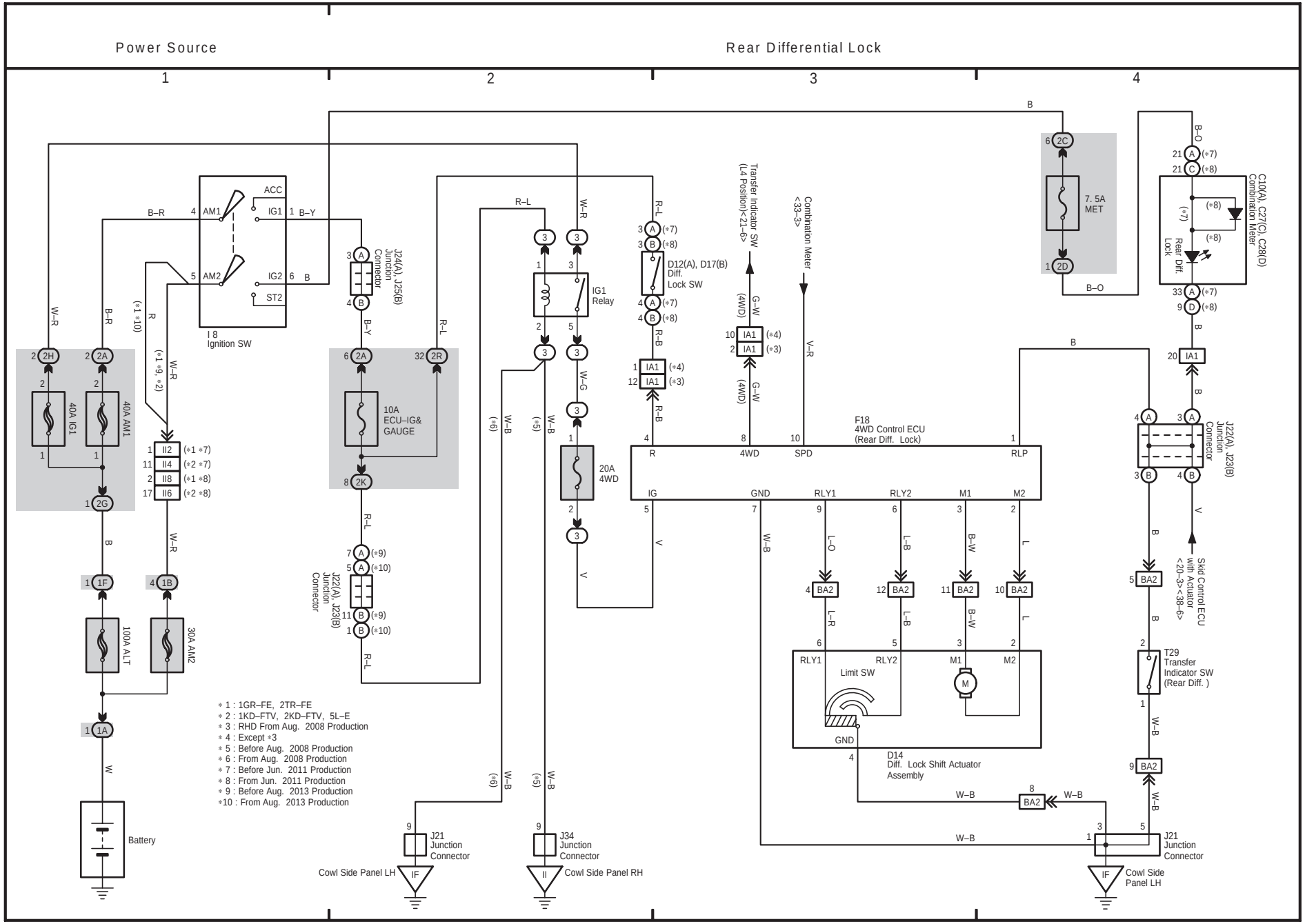
Power Source
Rear Differential Lock
1
2
3
4
ACC
IG1
IG2
ST2
AM1
AM2
I 8
Ignition SW
J24(A), J25(B)
Junction
Connector
10A
ECU–IG&
GAUGE
J22(A), J23(B)
Junction
Connector
IG1
Relay
20A
4WD
D12(A), D17(B)
Diff.
Lock SW
Transfer Indicator SW
(L4 Position)<21–6>
Combination Meter
<33–3>
F18
4WD Control ECU
(Rear Diff. Lock)
IG
GND
RLY1
RLY2
M1
M2
4WD
SPD
RLP
Limit SW
D14
Diff. Lock Shift Actuator
Assembly
7. 5A
MET
C10(A), C27(C), C28(D)
Combination Meter
Rear Diff.
Lock
Skid Control ECU
with Actuator
<20–3><38–6>
T29
Transfer
Indicator SW
(Rear Diff.)
40A IG1
40A AM1
100A ALT
30A AM2
Battery
J21
Junction
Connector
Cowl Side Panel LH
J34
Junction
Connector
Cowl Side Panel RH
Cowl Side
Panel LH
∗1 : 1GR–FE, 2TR–FE
∗2 : 1KD–FTV, 2KD–FTV, 5L–E
∗3 : RHD From Aug. 2008 Production
∗4 : Except ∗3
∗5 : Before Aug. 2008 Production
∗6 : From Aug. 2008 Production
∗7 : Before Jun. 2011 Production
∗8 : From Jun. 2011 Production
∗9 : Before Aug. 2013 Production
∗10 : From Aug. 2013 Production