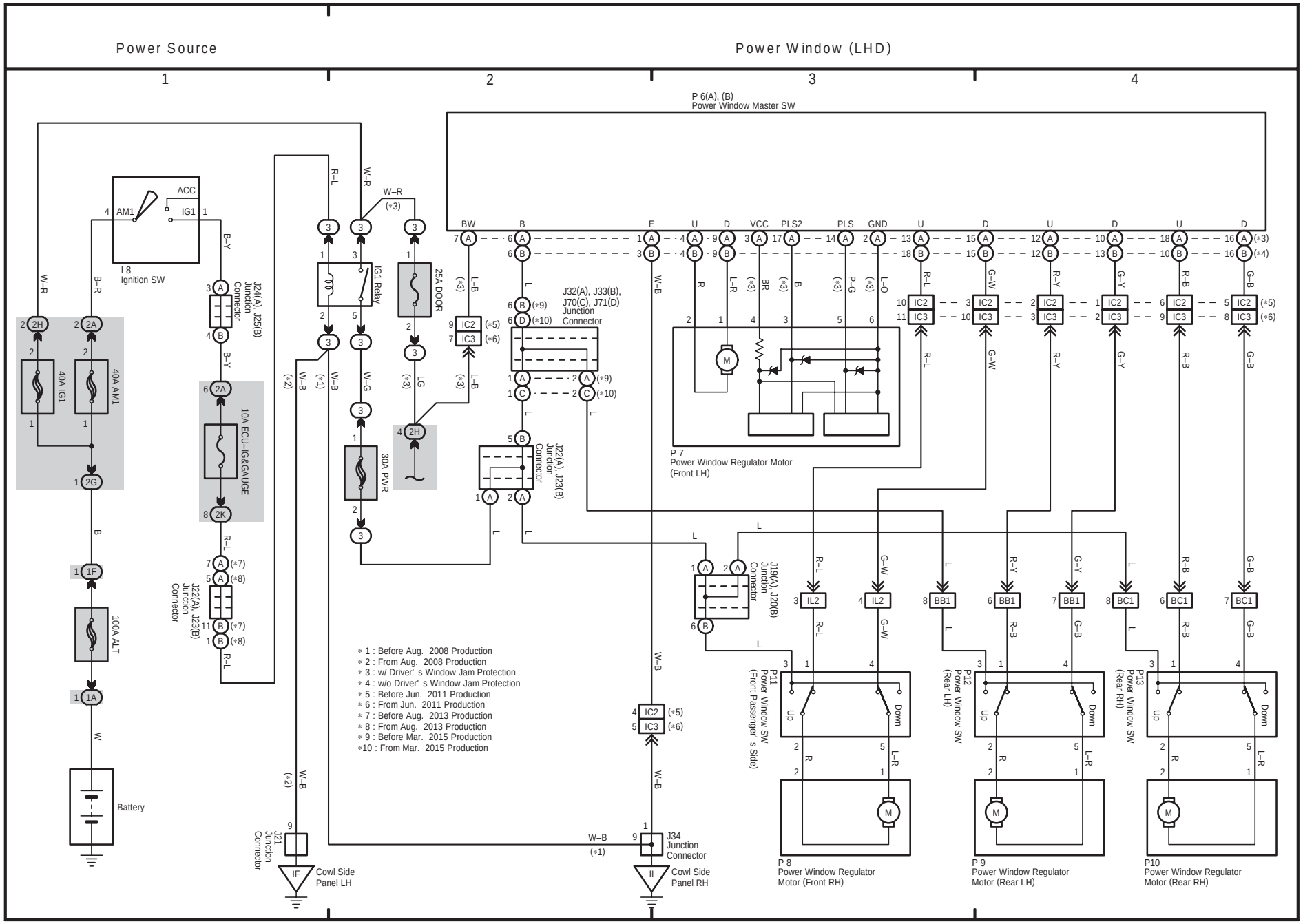
Power Source
Power Window (LHD)
1
2
3
4
P 6(A), (B)
Power Window Master SW
I 8
Ignition SW
ACC
IG1
AM1
J24(A), J25(B)
Junction
Connector
IG1 Relay
25A DOOR
J32(A), J33(B),
J70(C), J71(D)
Junction
Connector
40A IG1
40A AM1
10A ECU–IG&GAUGE
30A PWR
J22(A), J23(B)
Junction
Connector
J19(A), J20(B)
Junction
Connector
100A ALT
Battery
J21
Junction
Connector
Cowl Side
Panel LH
J34
Junction
Connector
Cowl Side
Panel RH
P 7
Power Window Regulator Motor
(Front LH)
P11
Power Window SW
(Front Passenger s Side)
P12
Power Window SW
(Rear LH)
P13
Power Window SW
(Rear RH)
P 8
Power Window Regulator
Motor (Front RH)
P 9
Power Window Regulator
Motor (Rear LH)
P10
Power Window Regulator
Motor (Rear RH)
Up
Down
∗ 1 : Before Aug. 2008 Production
∗ 2 : From Aug. 2008 Production
∗ 3 : w/ Driver' s Window Jam Protection
∗ 4 : w/o Driver' s Window Jam Protection
∗ 5 : Before Jun. 2011 Production
∗ 6 : From Jun. 2011 Production
∗ 7 : Before Aug. 2013 Production
∗ 8 : From Aug. 2013 Production
∗ 9 : Before Mar. 2015 Production
∗10 : From Mar. 2015 Production