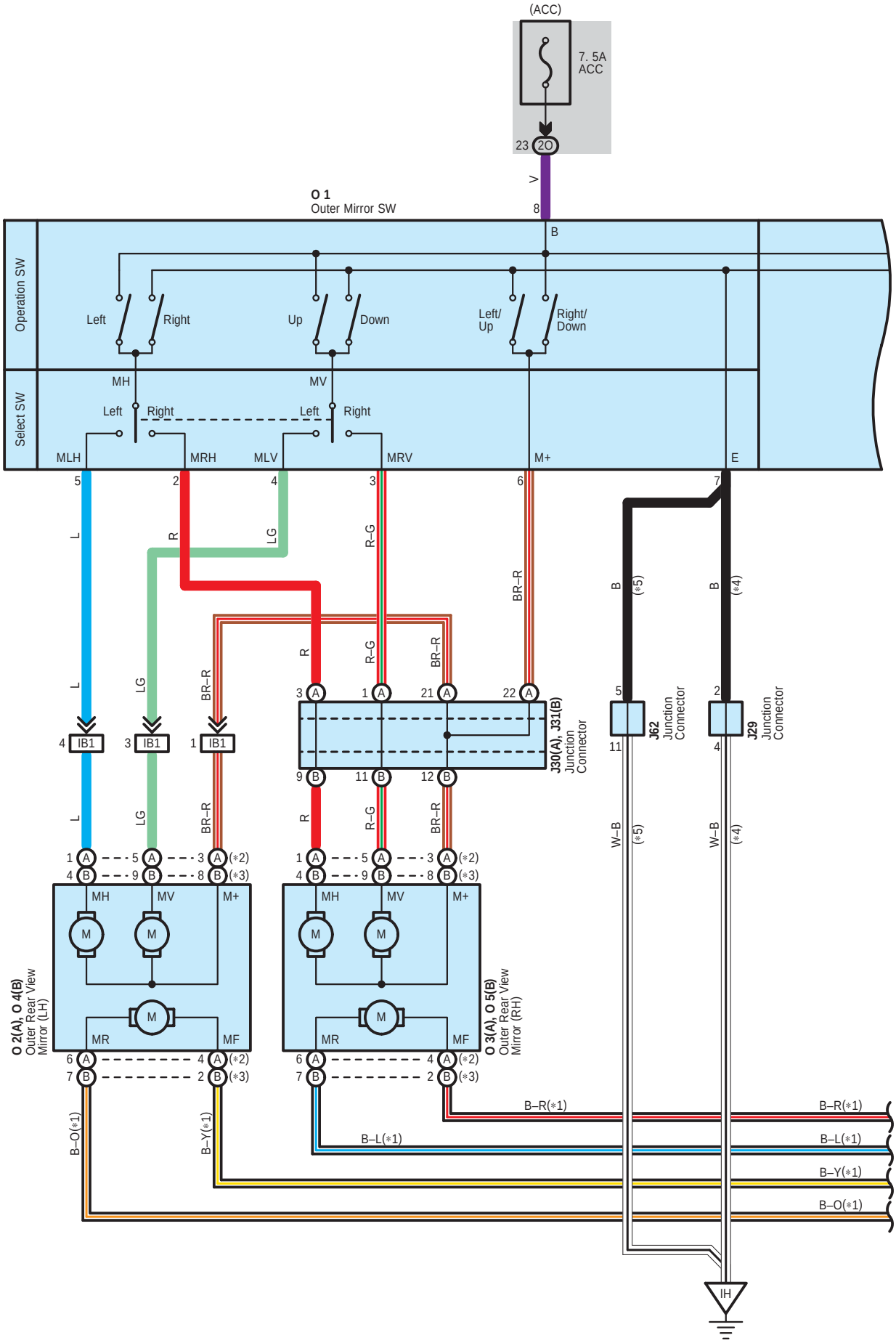
(ACC)
7. 5A
ACC
23
2O
V
O 1
Outer Mirror SW
8
B
Operation SW
Left
Right
Up
Down
Left/
Up
Right/
Down
Select SW
MH
MV
Left
Right
Left
Right
MLH
MRH
MLV
MRV
M+
E
5
2
4
3
6
7
L
R
LG
R–G
BR–R
B
(*5)
B
(*4)
IB1
J30(A), J31(B)
Junction
Connector
J62
Junction
Connector
J29
Junction
Connector
W–B
(*5)
W–B
(*4)
O 2(A), O 4(B)
Outer Rear View
Mirror (LH)
O 3(A), O 5(B)
Outer Rear View
Mirror (RH)
MH
MV
M+
MR
MF
M
(*2)
(*3)
B–R(*1)
B–L(*1)
B–Y(*1)
B–O(*1)
IH

∗ 1 : w/ Retractor
∗ 2 : Before Aug. 2010 Production
∗ 3 : From Aug. 2010 Production
∗ 4 : Before Jun. 2011 Production
∗ 5 : From Jun. 2011 Production

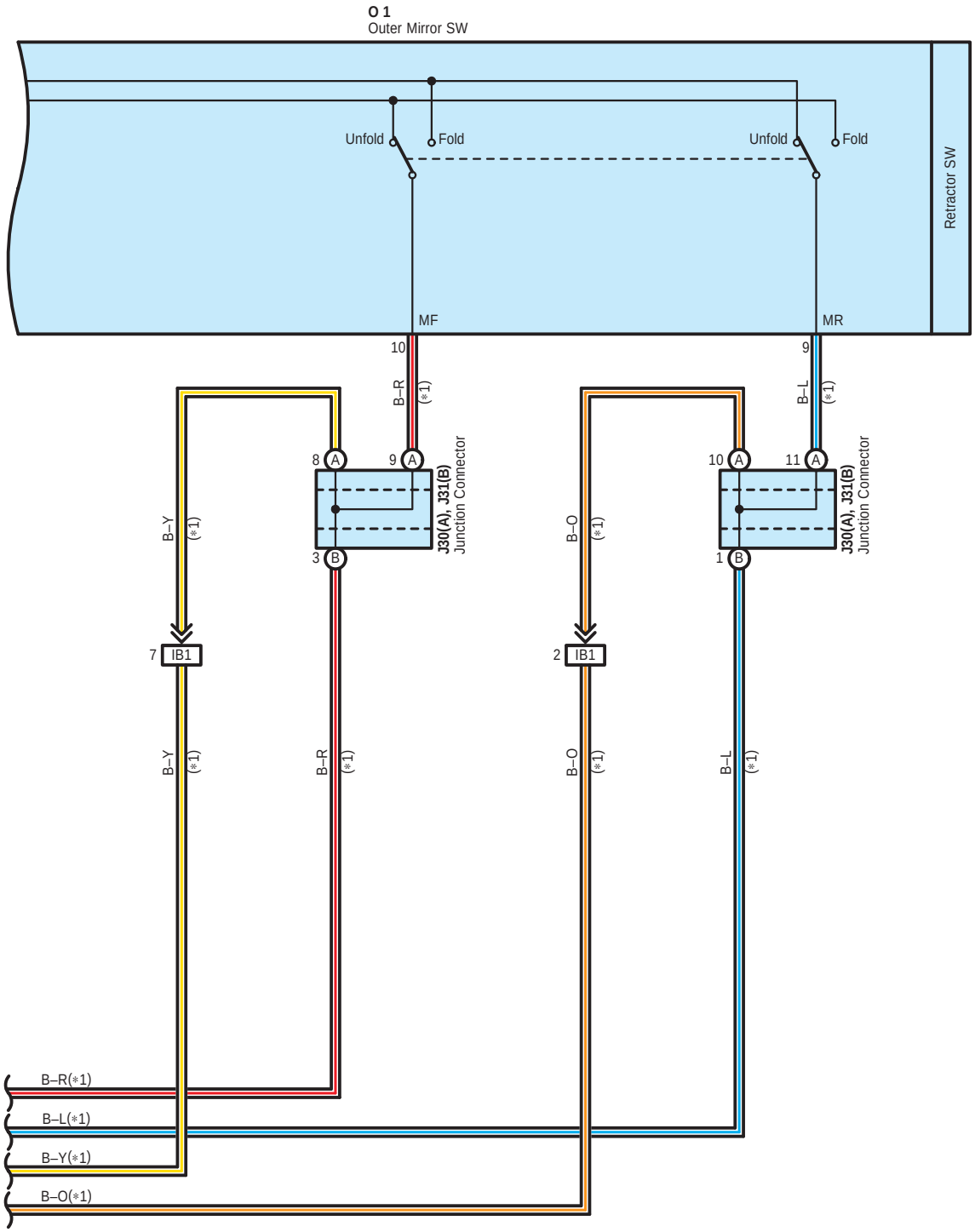

J29
White

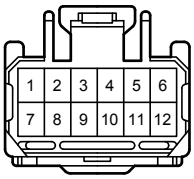

90980-11661

J30
Blue

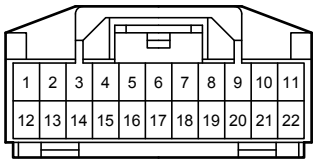

90980-11915

J31
Blue

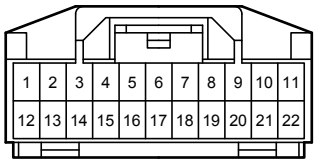

90980-11915

J62
White

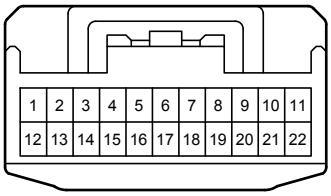

90980-12372

O1
White

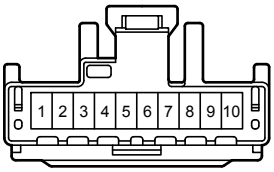

90980-11657

O2
White

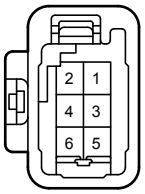

90980-11452

O3
White

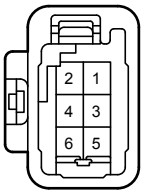

90980-11452

O4
White

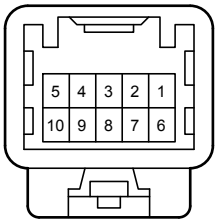

90980-12367

O5
White

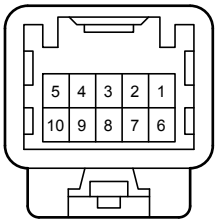

90980-12367

2O
White

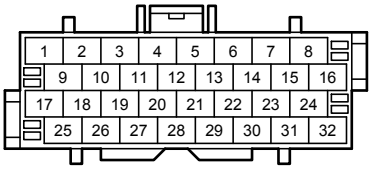

IB1
White

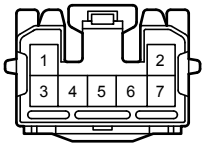

90980-11529

90980-11528