(Cont. next page)

Power Source (1GD-FTV)

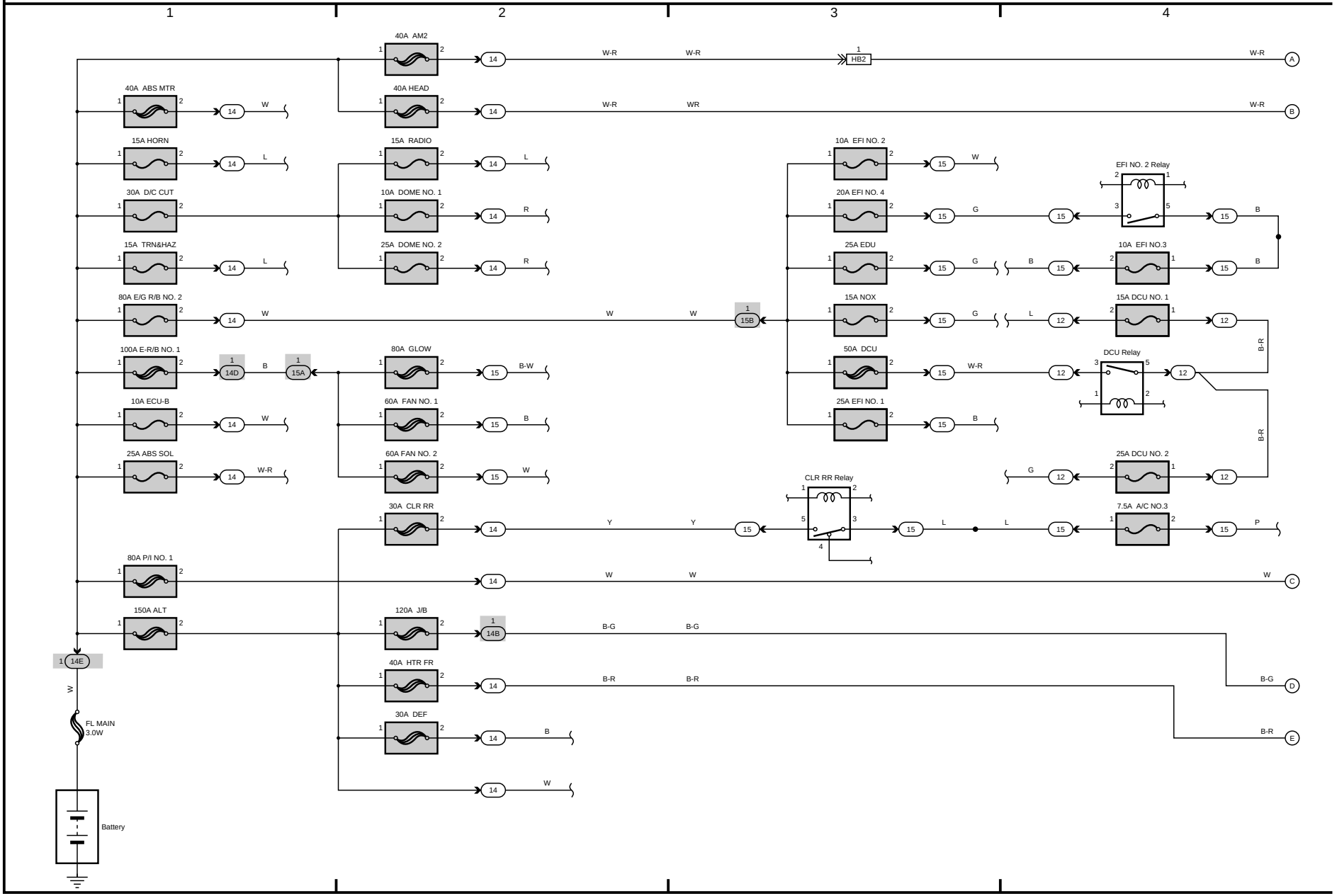

(Cont. next page)

Power Source <1GD-FTV>

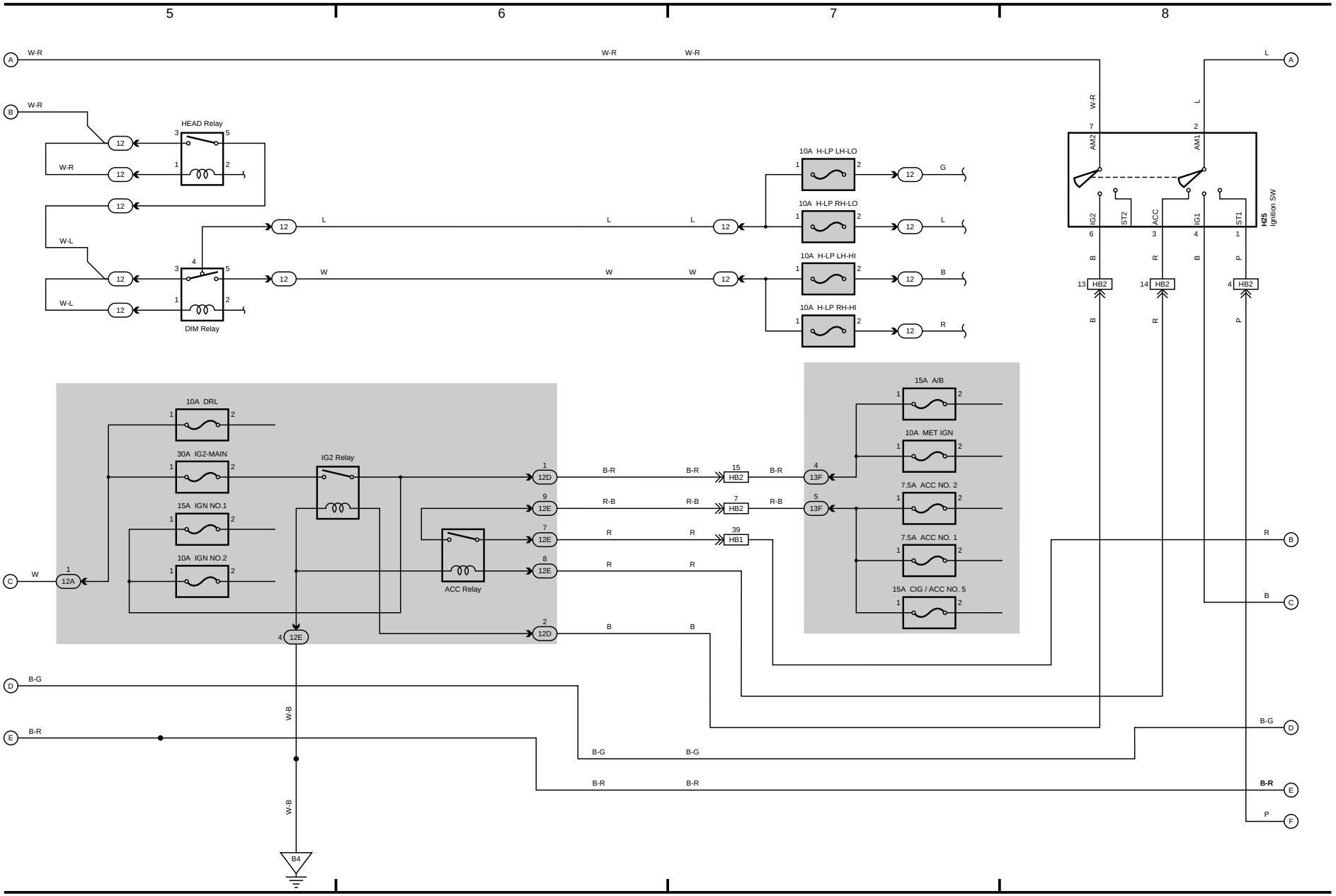

HIACE (EM26T4E)

M
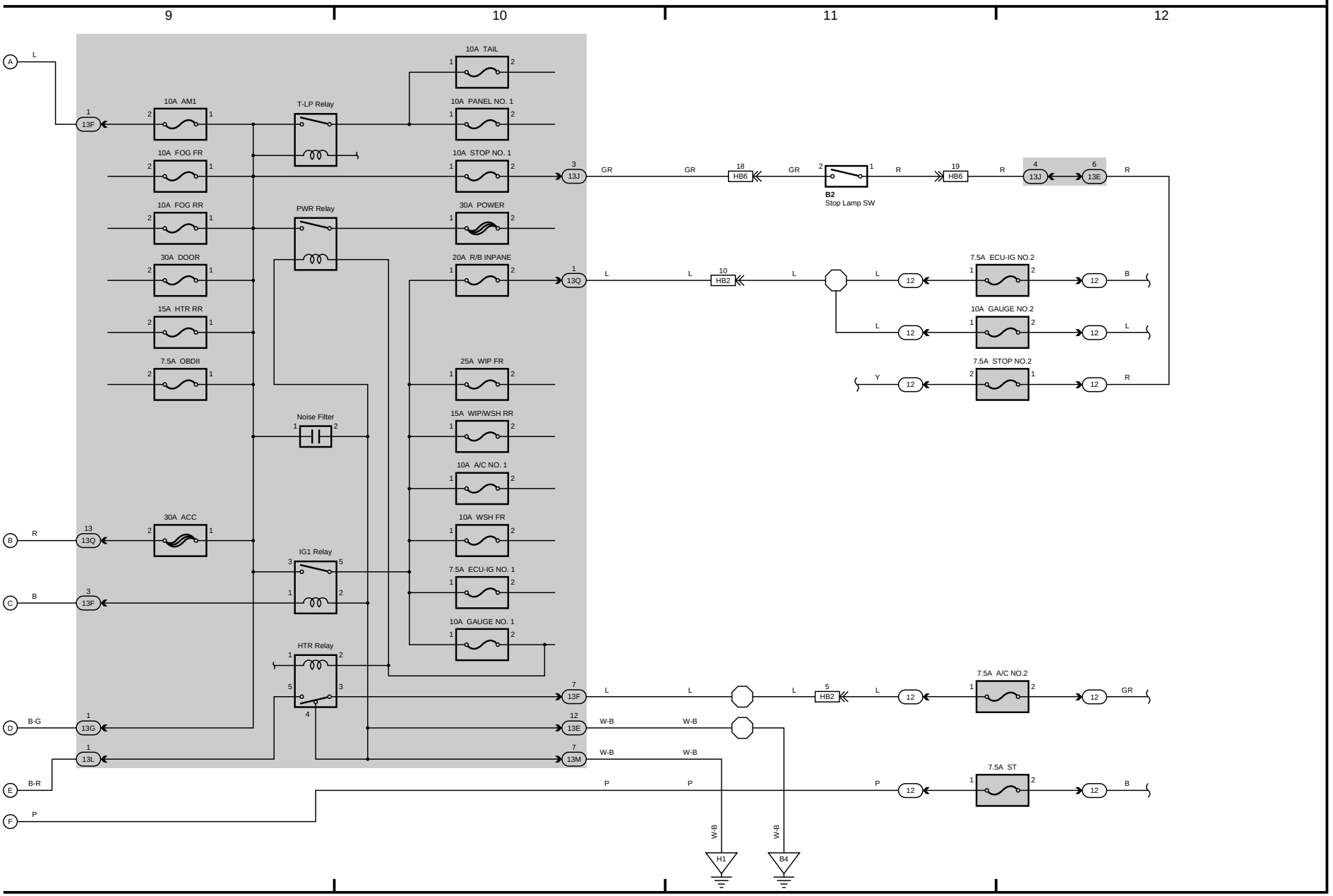
Power Source <1GD-FTV>