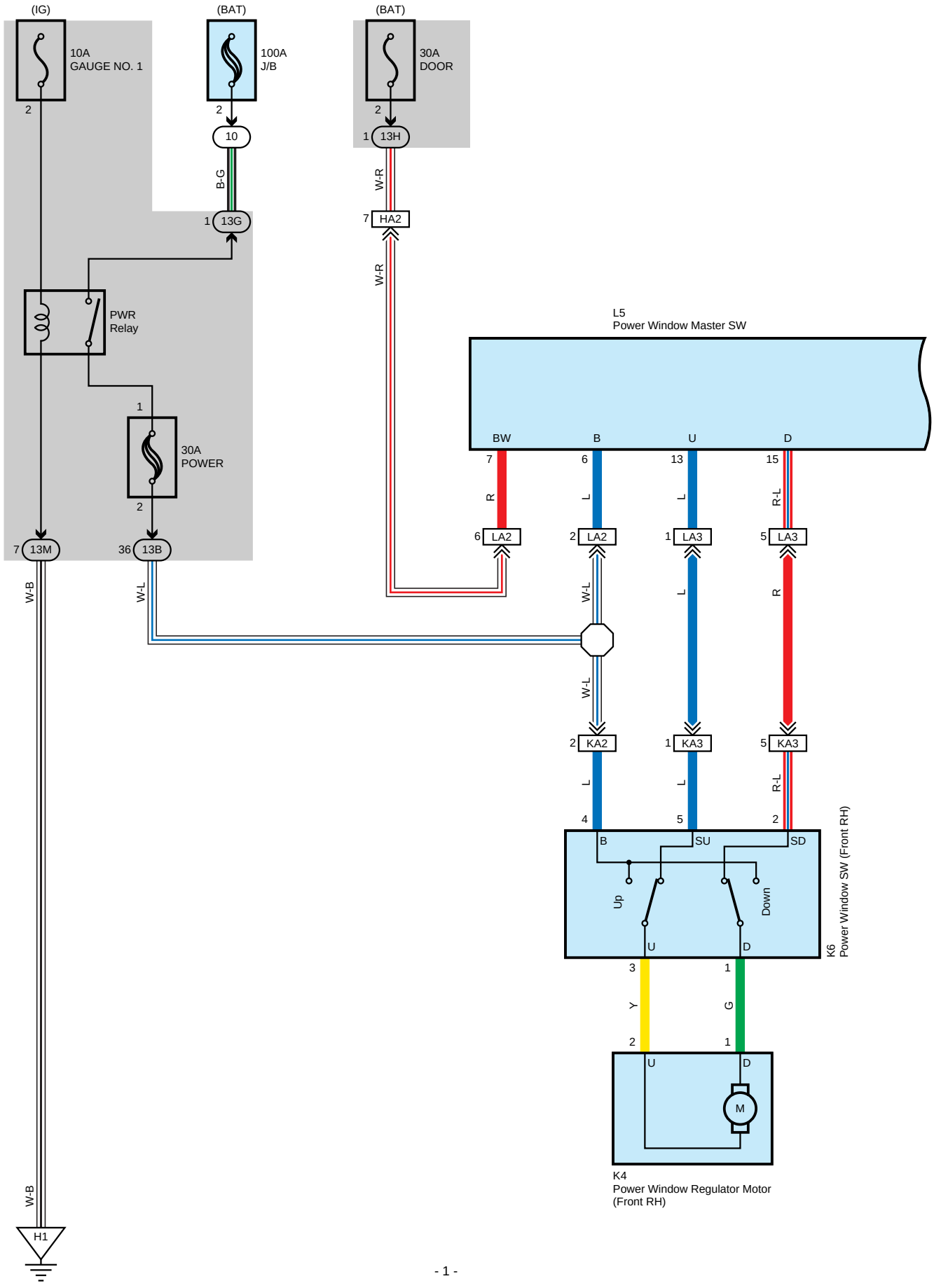
(IG)
10A
GAUGE NO. 1
2
(BAT)
100A
J/B
2
10
B-G
1
13G
(BAT)
30A
DOOR
2
1
13H
W-R
7
HA2
W-R
PWR
Relay
1
30A
POWER
2
7
13M
36
13B
W-B
W-L
L5
Power Window Master SW
BW
B
U
D
7
6
13
15
R
L
L
R-L
6
LA2
2
LA2
1
LA3
5
LA3
W-L
L
R
W-L
2
KA2
1
KA3
5
KA3
L
L
R-L
4
5
2
B
SU
SD
Up
Down
U
D
K6
Power Window SW (Front RH)
3
1
Y
G
2
1
U
D
M
K4
Power Window Regulator Motor
(Front RH)
W-B
H1

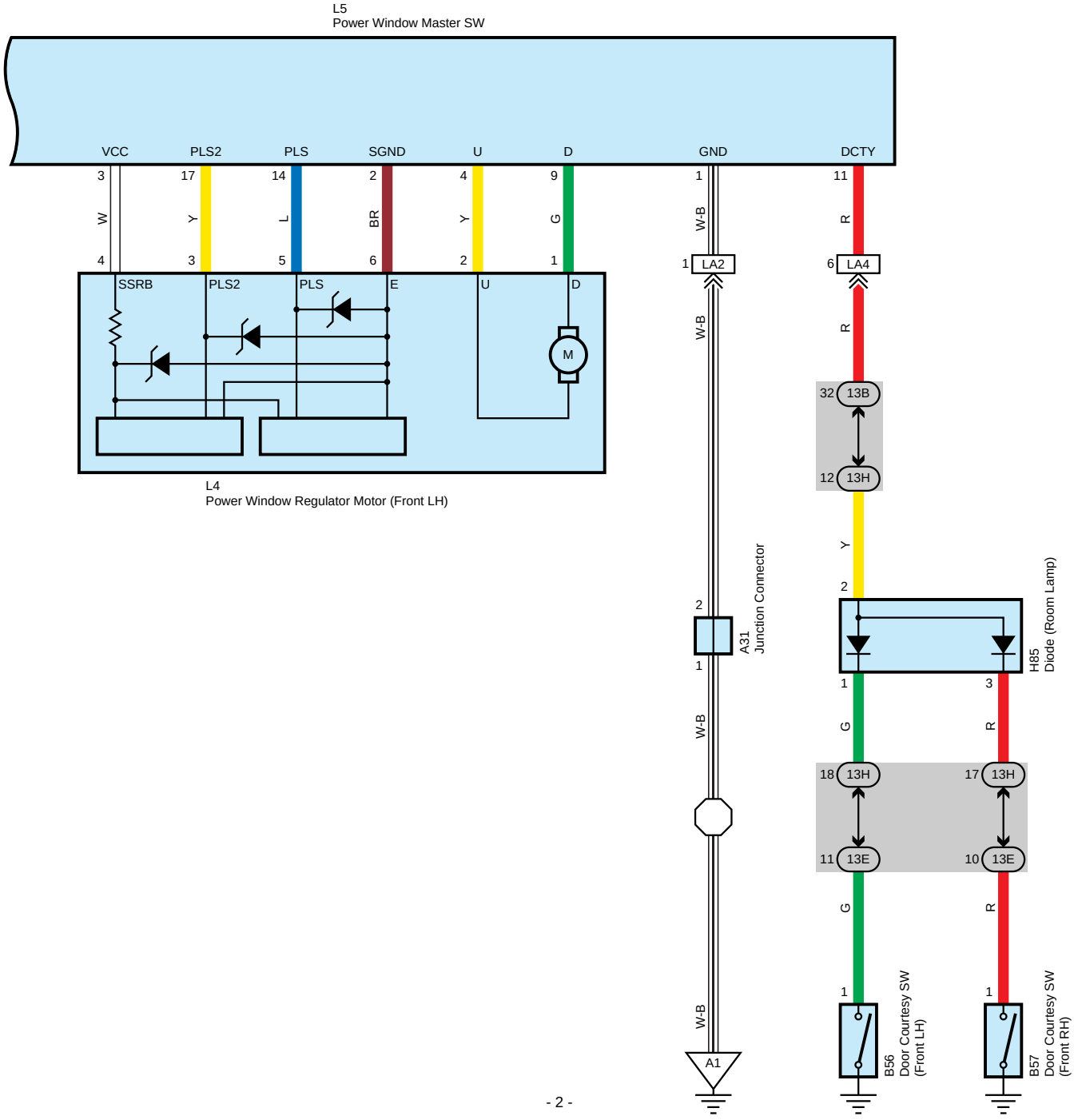
L5
Power Window Master SW
VCC
PLS2
PLS
SGND
U
D
GND
DCTY
3
17
14
2
4
9
1
11
W
Y
L
BR
Y
G
W-B
R
4
3
5
6
2
1
1
LA2
6
LA4
SSRB
PLS2
PLS
E
U
D
M
W-B
R
32
13B
12
13H
L4
Power Window Regulator Motor (Front LH)
Y
2
2
A31
Junction Connector
H85
Diode (Room Lamp)
1
1
3
W-B
G
R
18
13H
17
13H
11
13E
10
13E
G
R
W-B
1
1
A1
B56
Door Courtesy SW
(Front LH)
B57
Door Courtesy SW
(Front RH)

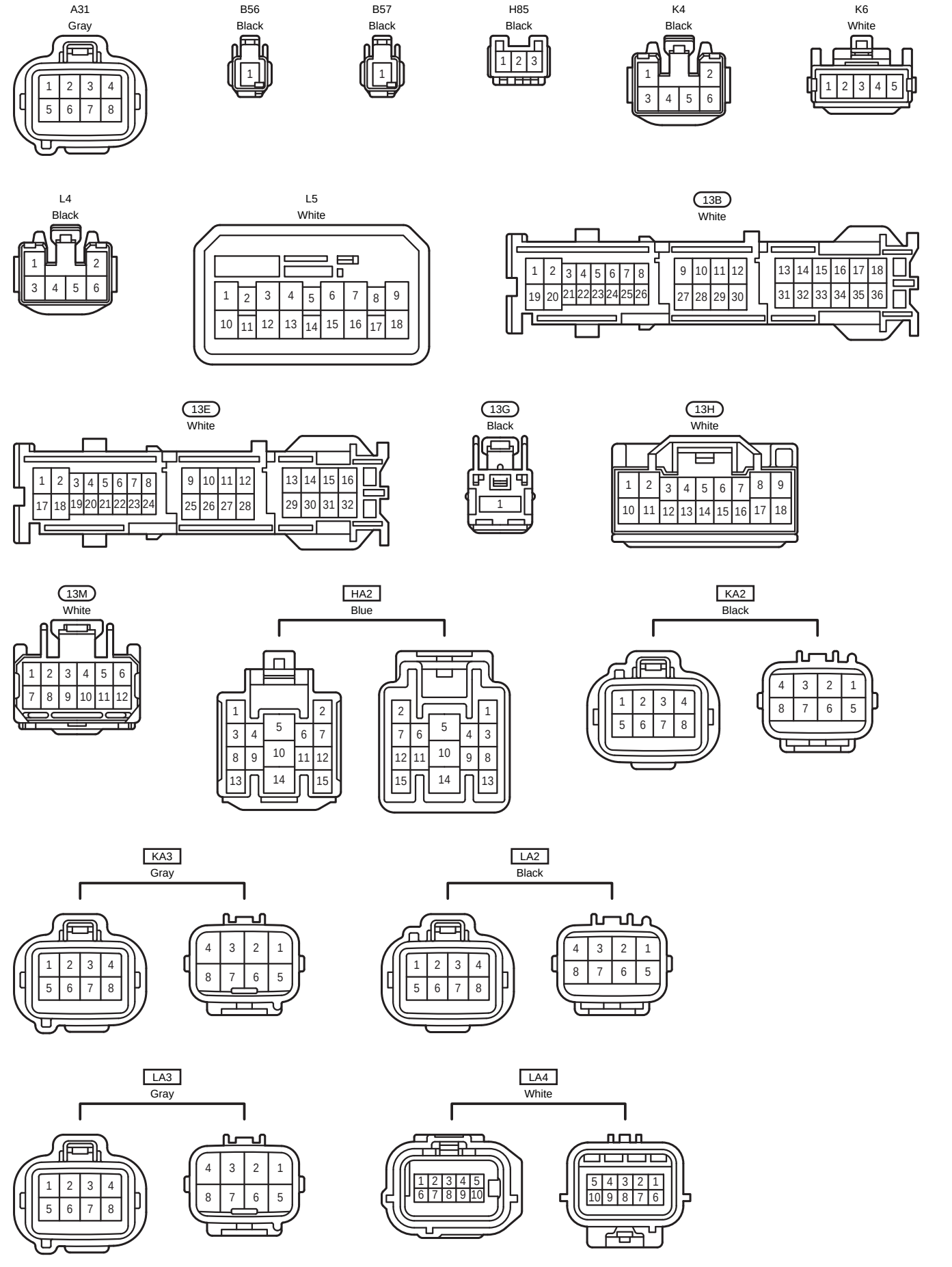
A31
Gray
B56
Black
B57
Black
H85
Black
K4
Black
K6
White
L4
Black
L5
White
13B
White
13E
White
13G
Black
13H
White
13M
White
HA2
Blue
KA2
Black
KA3
Gray
LA2
Black
LA3
Gray
LA4
White