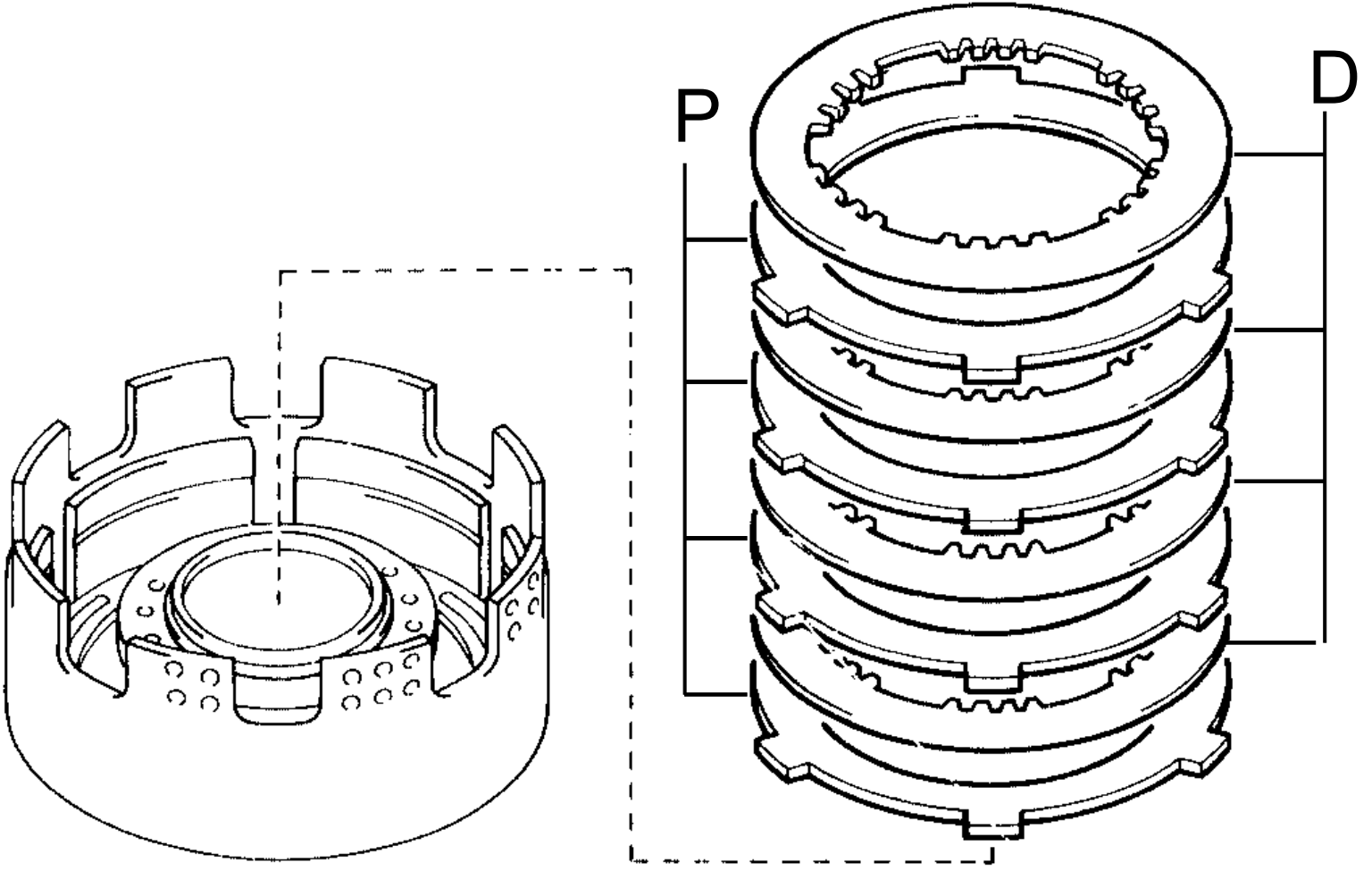

AT1640