BACK

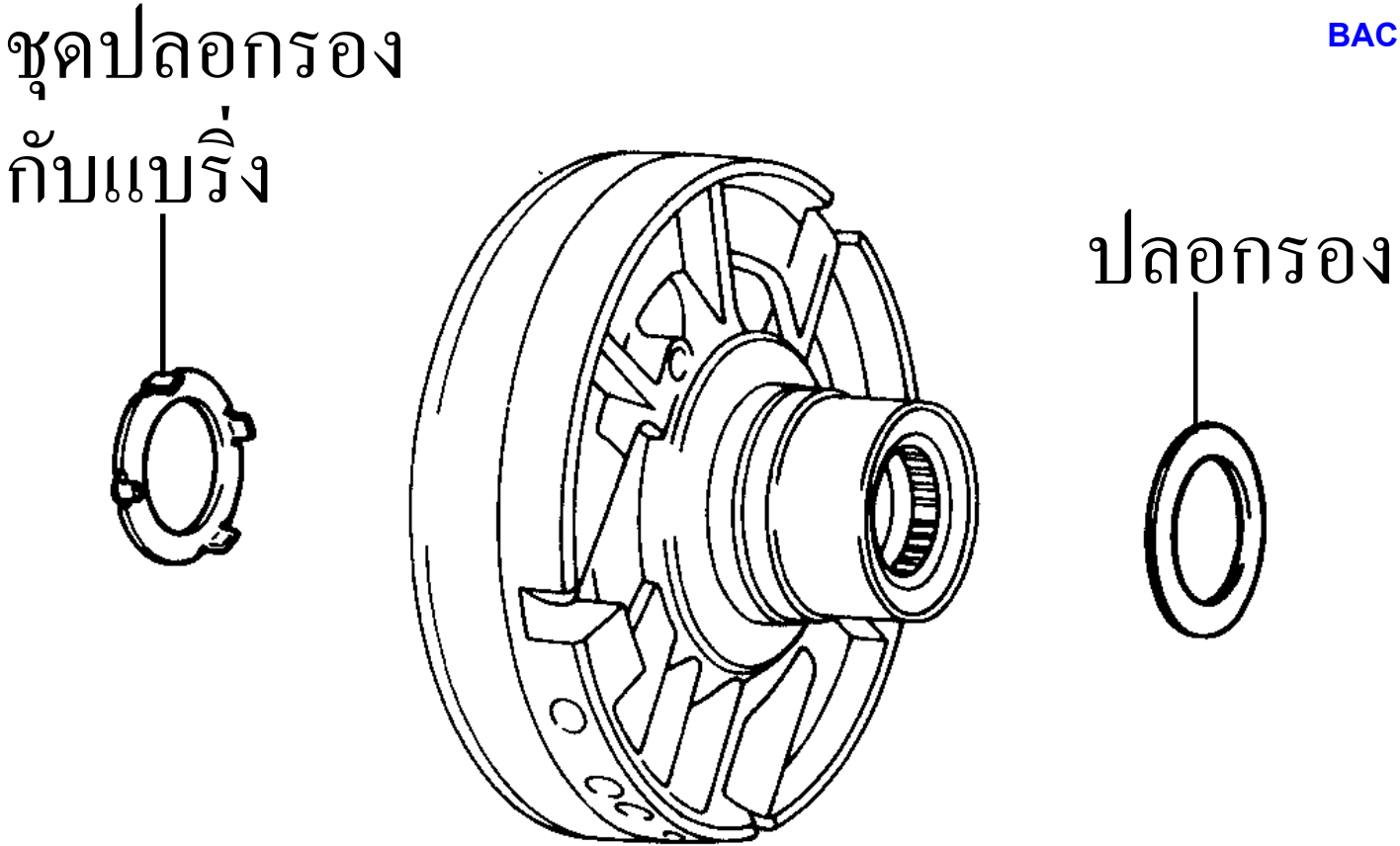

AT5110