BACK

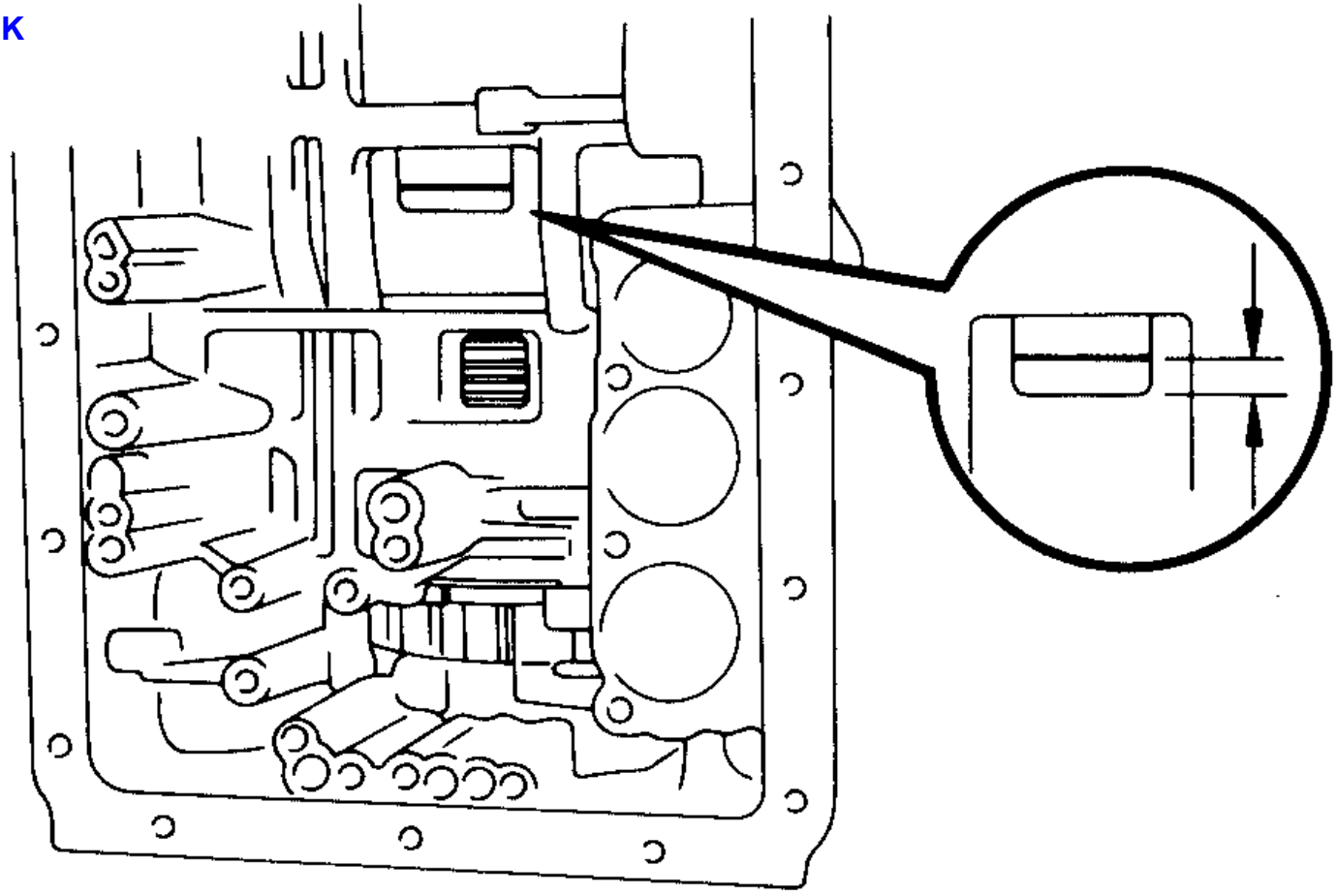

AT5213