BACK

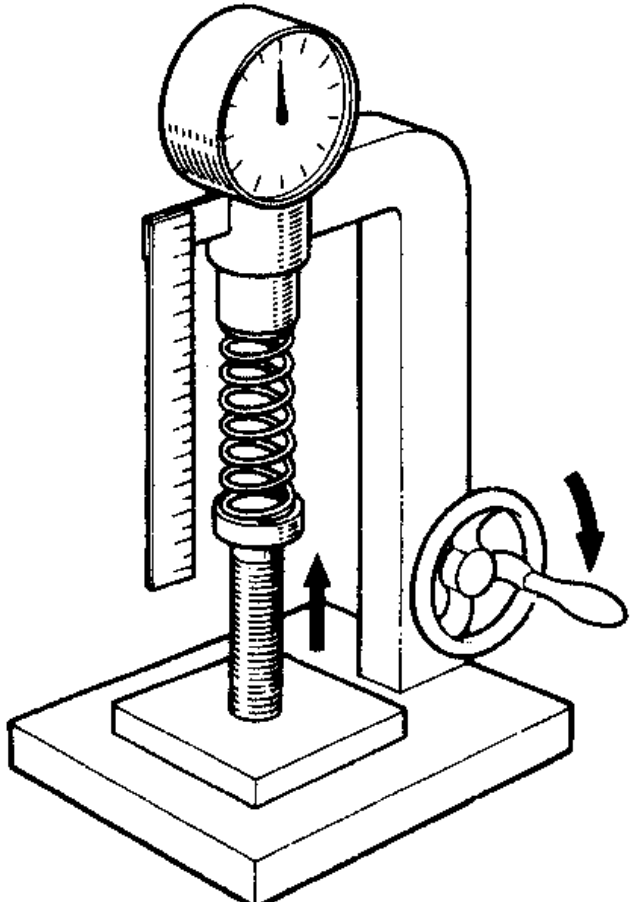

EM0281