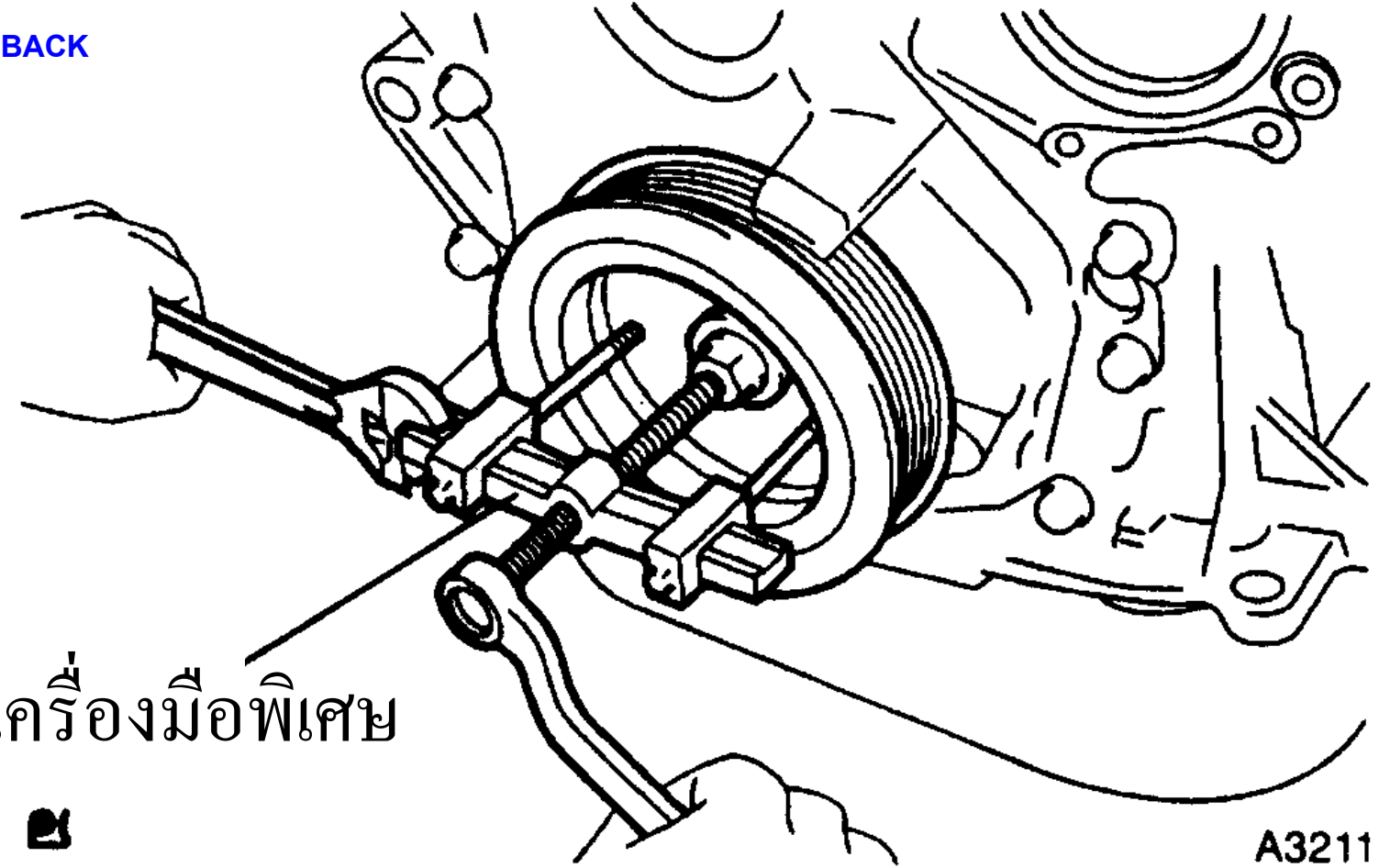BACK