BACK

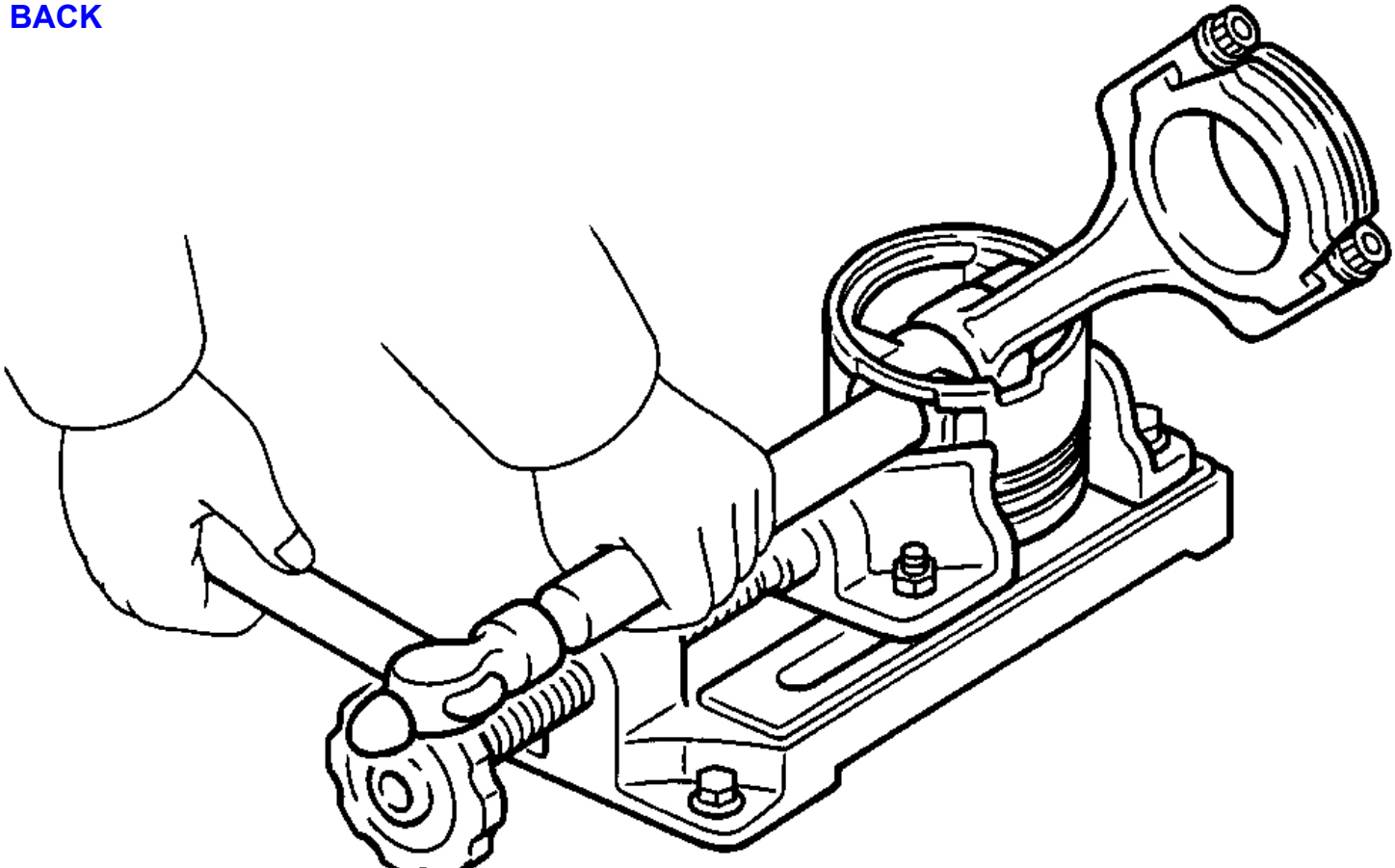

N

A60212