Back

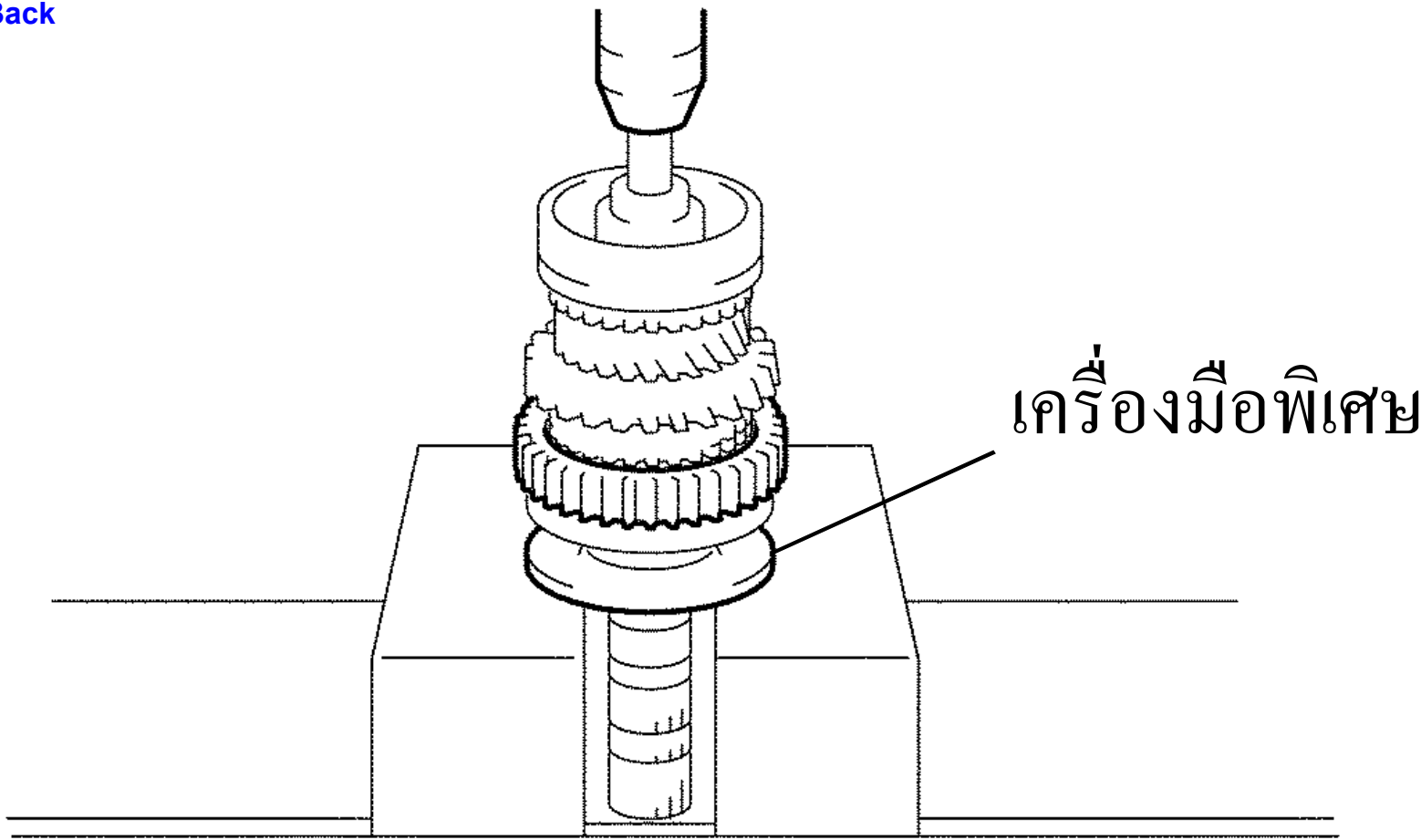

P

C86585