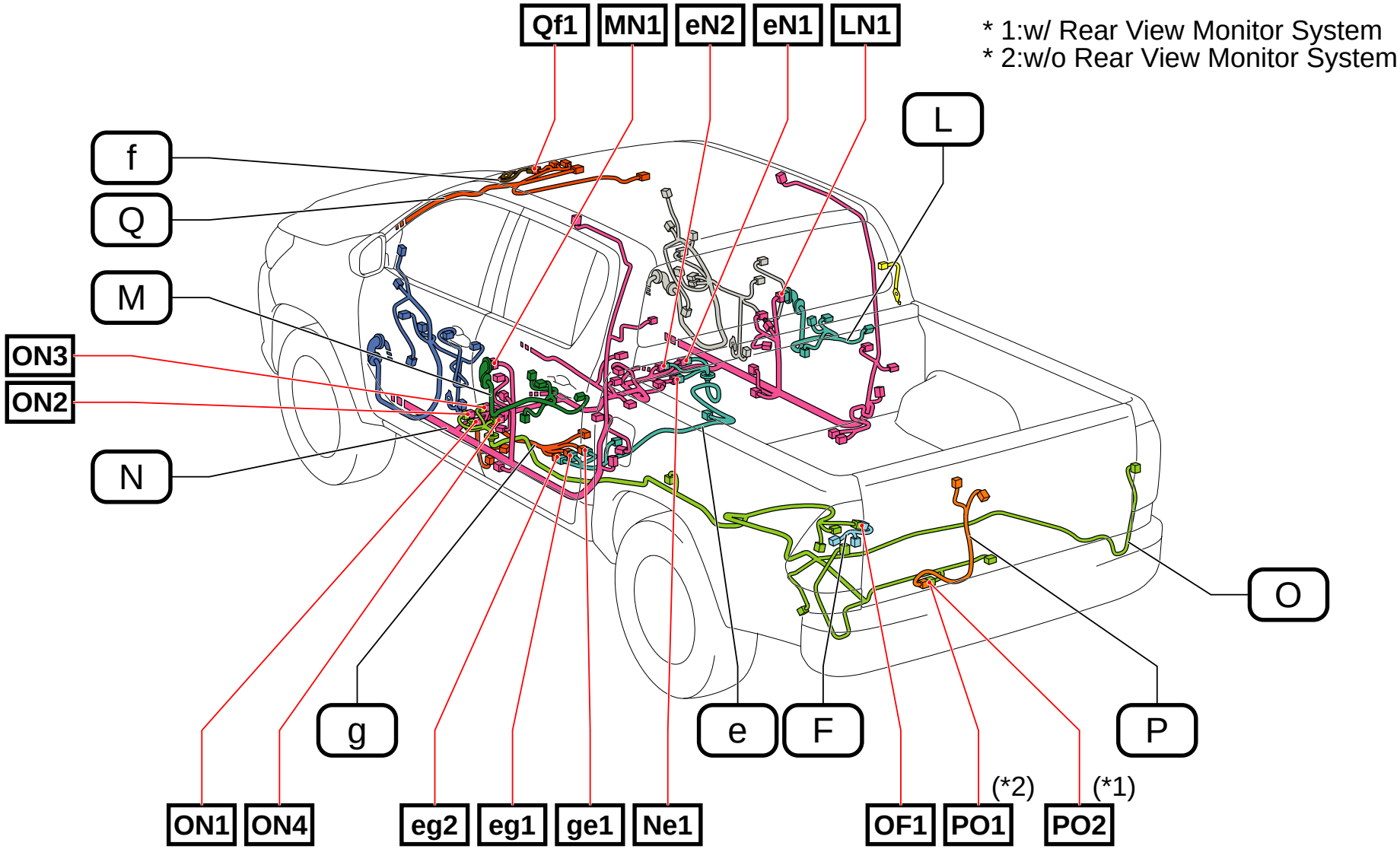
Qf1
MN1
eN2
eN1
LN1
* 1:w/ Rear View Monitor System
* 2:w/o Rear View Monitor System
L
f
Q
M
ON3
ON2
N
O
g
e
F
P
ON1
ON4
eg2
eg1
ge1
Ne1
OF1
PO1
(*2)
PO2
(*1)

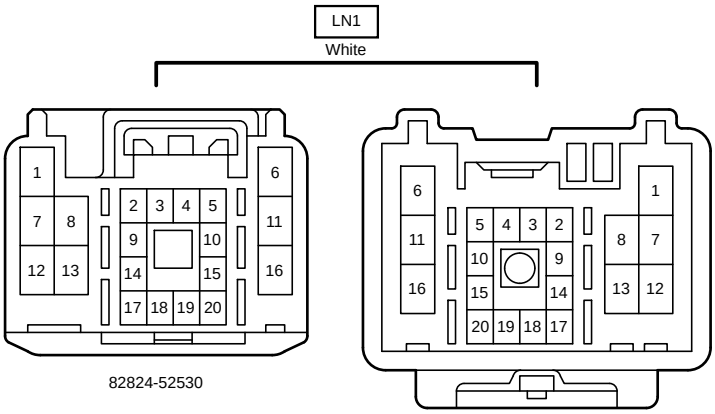
LN1
White
82824-52530
82824-52520

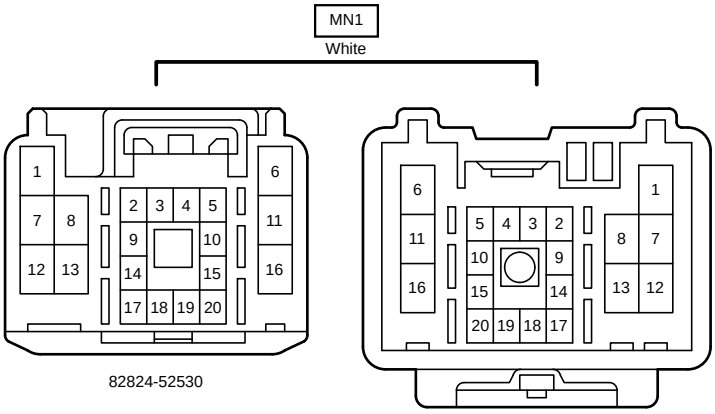
MN1
White
82824-52530
82824-52520

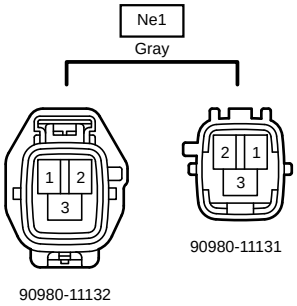
Ne1
Gray
90980-11132
90980-11131

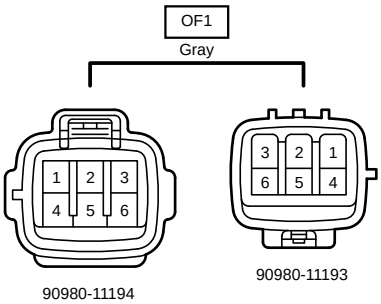
OF1
Gray
90980-11194
90980-11193

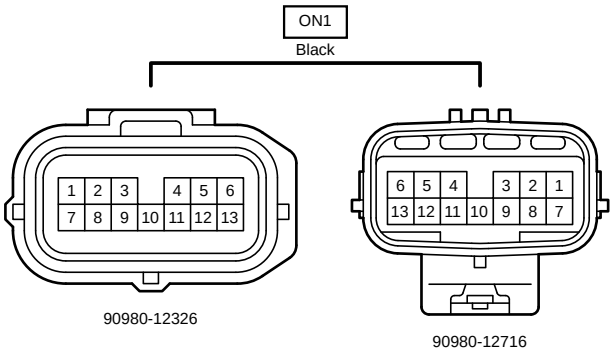
ON1
Black
90980-12326
90980-12716

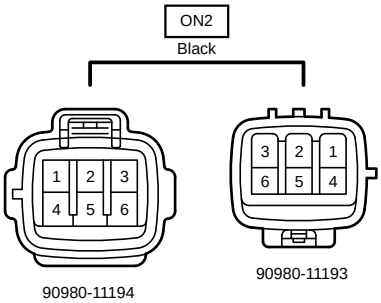
ON2
Black
90980-11194
90980-11193

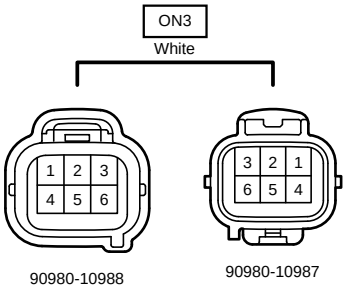
ON3
White
90980-10988
90980-10987

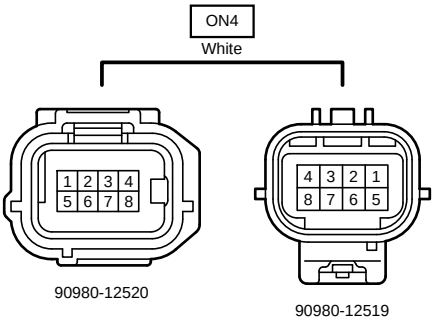
ON4
White
90980-12520
90980-12519

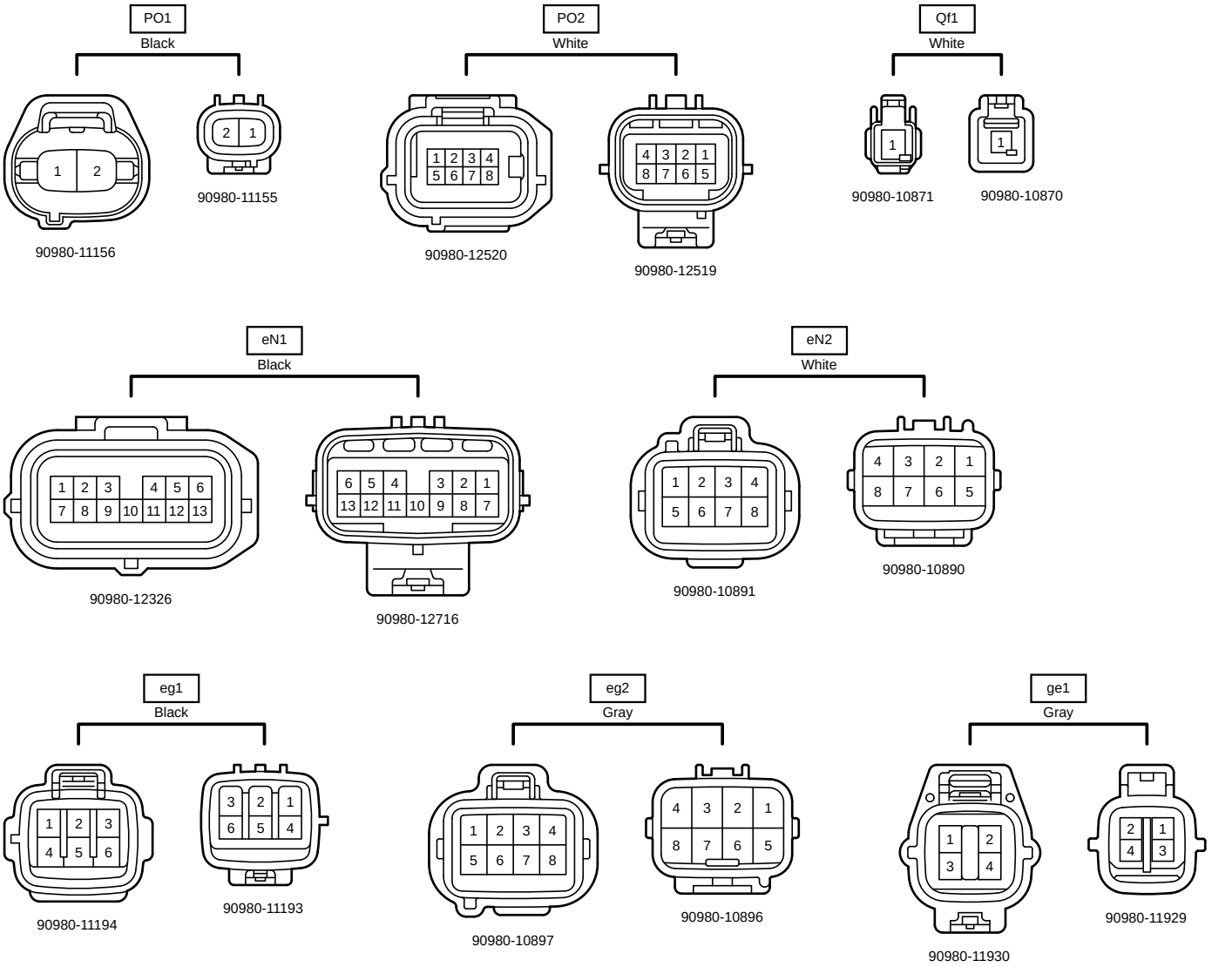
PO1
Black
1 2
90980-11156
2 1
90980-11155
PO2
White
1 2 3 4
5 6 7 8
90980-12520
4 3 2 1
8 7 6 5
90980-12519
Qf1
White
1
90980-10871
1
90980-10870
eN1
Black
1 2 3 4 5 6
7 8 9 10 11 12 13
90980-12326
6 5 4 3 2 1
13 12 11 10 9 8 7
90980-12716
eN2
White
1 2 3 4
5 6 7 8
90980-10891
4 3 2 1
8 7 6 5
90980-10890
eg1
Black
1 2 3
4 5 6
90980-11194
3 2 1
6 5 4
90980-11193
eg2
Gray
1 2 3 4
5 6 7 8
90980-10897
4 3 2 1
8 7 6 5
90980-10896
ge1
Gray
1 2
3 4
90980-11930
2 1
4 3
90980-11929