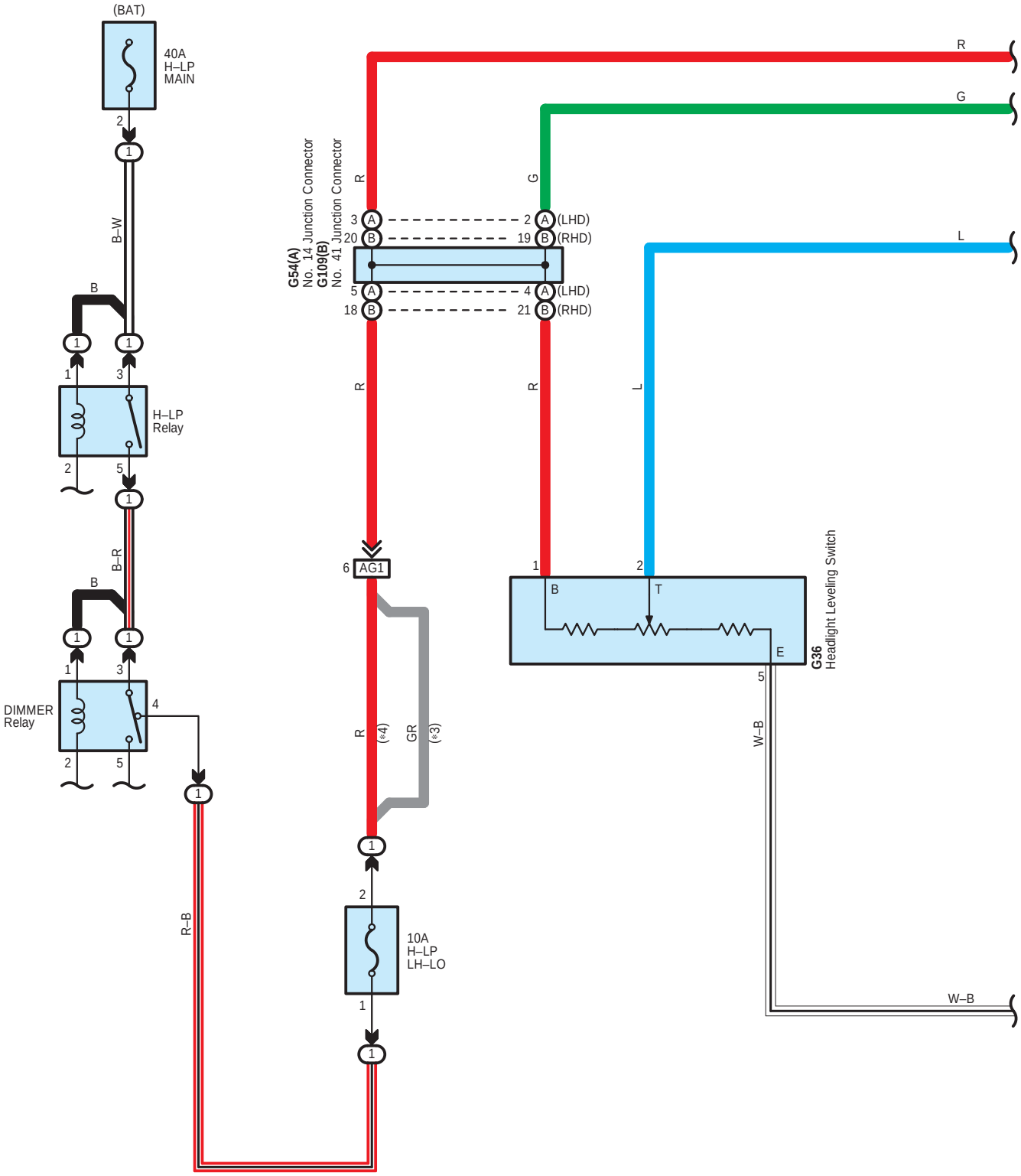
(BAT)
40A
H–LP
MAIN
B–W
B
H–LP
Relay
B–R
B
DIMMER
Relay
R–B
R
G
L
W–B
G54(A)
No. 14 Junction Connector
G109(B)
No. 41 Junction Connector
(LHD)
(RHD)
AG1
(*4)
GR
(*3)
10A
H–LP
LH–LO
G36
Headlight Leveling Switch

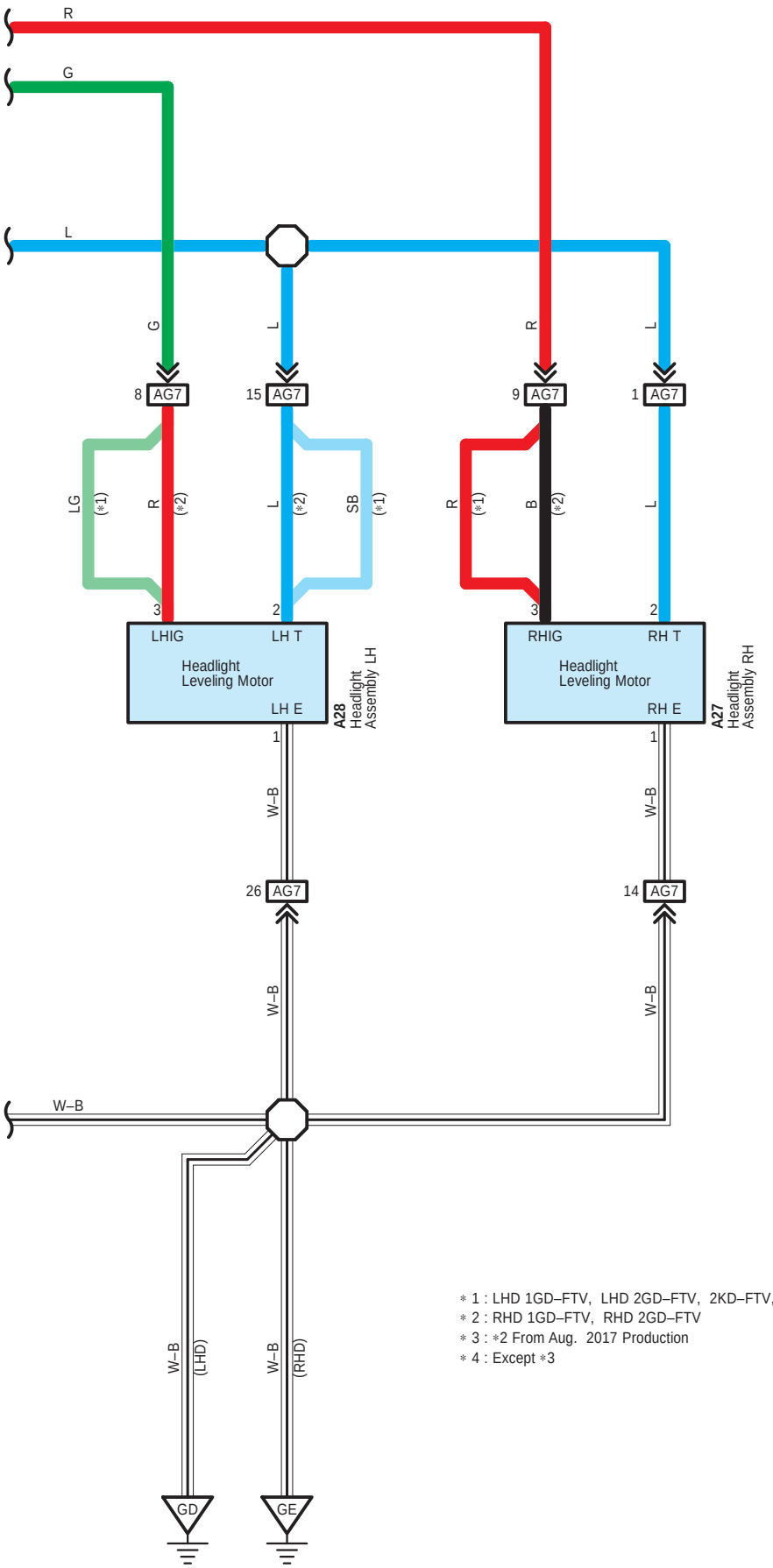

∗ 1 : LHD 1GD–FTV, LHD 2GD–FTV, 2KD–FTV, 1GR–FE, 1TR–FE, 2TR–FE, 1KD–FTV
∗ 2 : RHD 1GD–FTV, RHD 2GD–FTV
∗ 3 : ∗2 From Aug. 2017 Production
∗ 4 : Except ∗3

A27
Black

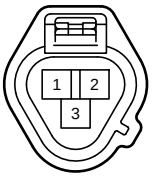

90980-11016
(Headlight Leveling Motor)

A28
Black

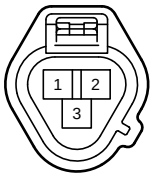

90980-11016
(Headlight Leveling Motor)

G36
Black

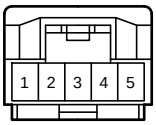

90980-11909

G54
Black

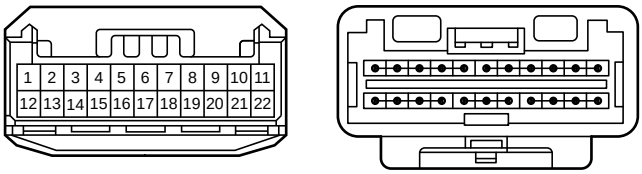

90980-12B54

G109
Black

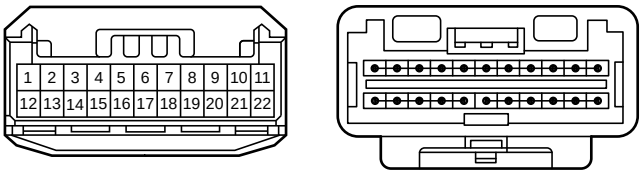

90980-12B54

AG1
White

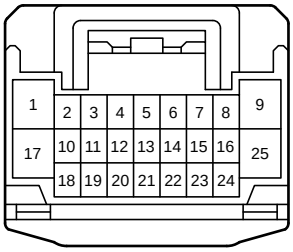

90980-12414

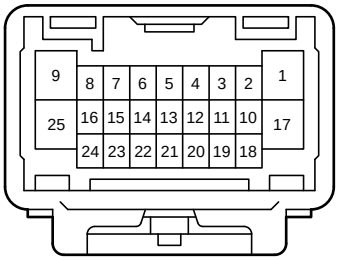

90980-12413

AG7
White

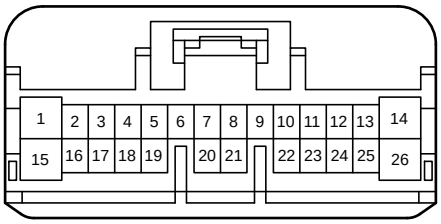

90980-12771

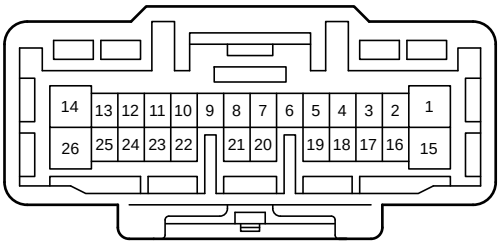

90980-12770