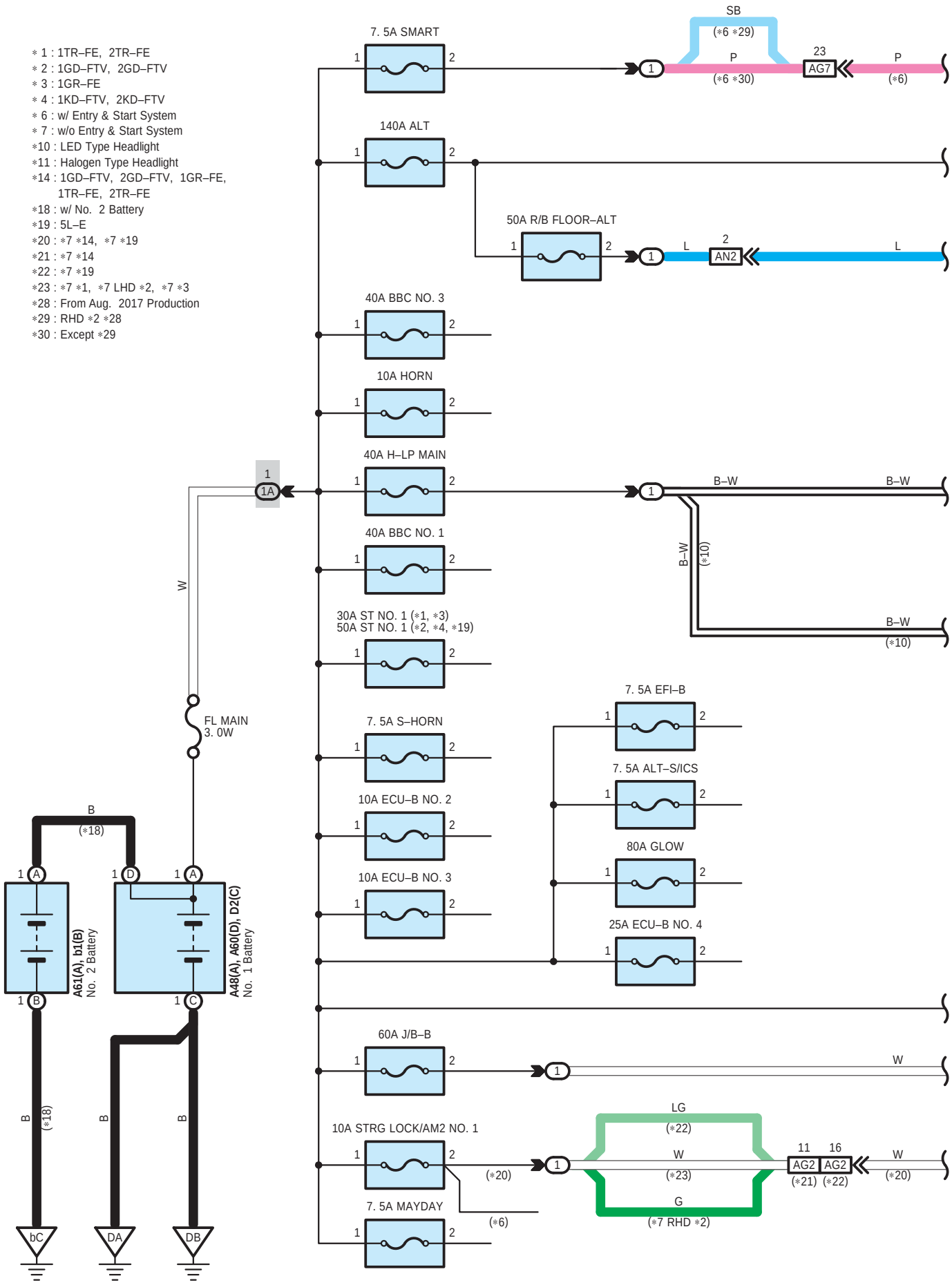
∗1 : 1TR–FE, 2TR–FE
∗2 : 1GD–FTV, 2GD–FTV
∗3 : 1GR–FE
∗4 : 1KD–FTV, 2KD–FTV
∗6 : w/ Entry & Start System
∗7 : w/o Entry & Start System
∗10 : LED Type Headlight
∗11 : Halogen Type Headlight
∗14 : 1GD–FTV, 2GD–FTV, 1GR–FE, 1TR–FE, 2TR–FE
∗18 : w/ No. 2 Battery
∗19 : 5L–E
∗20 : ∗7 ∗14, ∗7 ∗19
∗21 : ∗7 ∗14
∗22 : ∗7 ∗19
∗23 : ∗7 ∗1, ∗7 LHD ∗2, ∗7 ∗3
∗28 : From Aug. 2017 Production
∗29 : RHD ∗2 ∗28
∗30 : Except ∗29
7. 5A SMART
140A ALT
50A R/B FLOOR–ALT
40A BBC NO. 3
10A HORN
40A H–LP MAIN
40A BBC NO. 1
30A ST NO. 1 (∗1, ∗3)
50A ST NO. 1 (∗2, ∗4, ∗19)
7. 5A S–HORN
10A ECU–B NO. 2
10A ECU–B NO. 3
7. 5A EFI–B
7. 5A ALT–S/ICS
80A GLOW
25A ECU–B NO. 4
60A J/B–B
10A STRG LOCK/AM2 NO. 1
7. 5A MAYDAY
FL MAIN
3. 0W
A61(A), b1(B)
No. 2 Battery
A48(A), A60(D), D2(C)
No. 1 Battery
SB
P
L
B–W
W
B
LG
G
AG7
AN2
AG2
bC
DA
DB

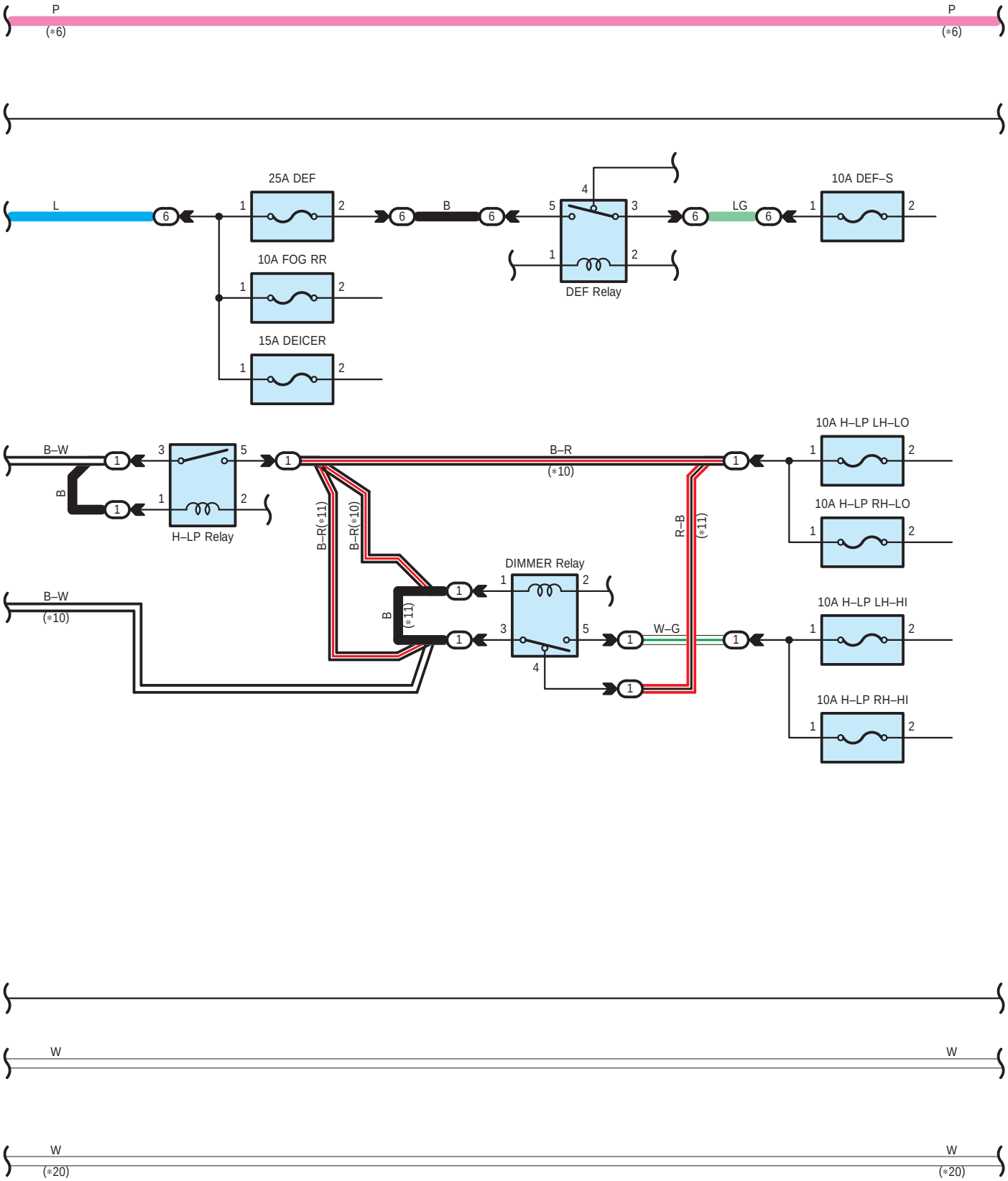
P
(*6)
P
(*6)
L
6
25A DEF
1
2
6
B
6
4
5
3
1
2
DEF Relay
6
LG
6
10A DEF–S
1
2
10A FOG RR
1
2
15A DEICER
1
2
B–W
1
3
5
B
1
1
2
H–LP Relay
1
B–R
(*10)
1
B–R(*11)
B–R(*10)
R–B
(*11)
10A H–LP LH–LO
1
2
10A H–LP RH–LO
1
2
DIMMER Relay
1
2
B–W
(*10)
1
B
(*11)
1
3
5
4
1
W–G
1
1
10A H–LP LH–HI
1
2
10A H–LP RH–HI
1
2
W
W
W
(*20)
W
(*20)

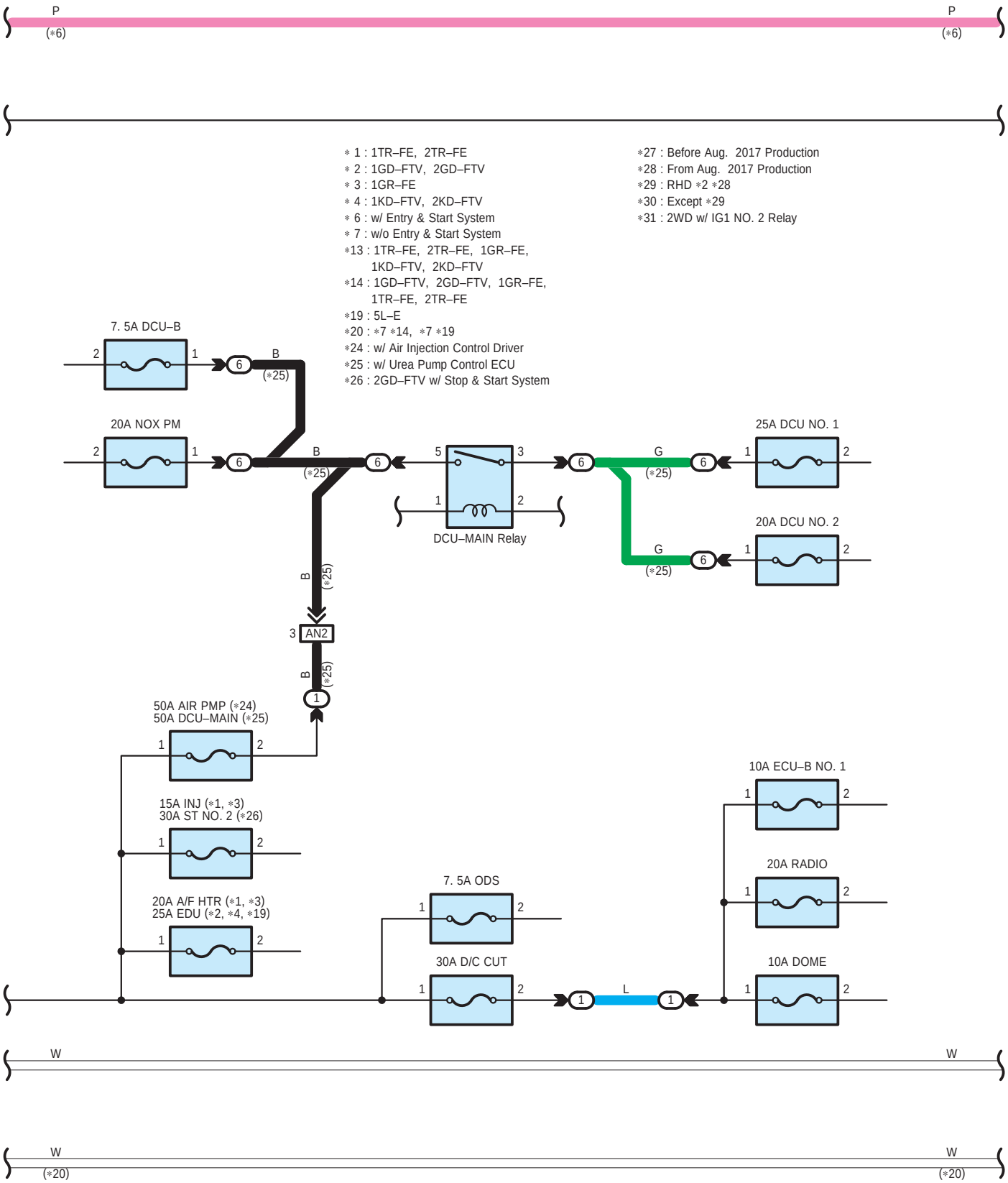
P
(*6)
P
(*6)
* 1 : 1TR–FE, 2TR–FE
* 2 : 1GD–FTV, 2GD–FTV
* 3 : 1GR–FE
* 4 : 1KD–FTV, 2KD–FTV
* 6 : w/ Entry & Start System
* 7 : w/o Entry & Start System
*13 : 1TR–FE, 2TR–FE, 1GR–FE, 1KD–FTV, 2KD–FTV
*14 : 1GD–FTV, 2GD–FTV, 1GR–FE, 1TR–FE, 2TR–FE
*19 : 5L–E
*20 : *7 *14, *7 *19
*24 : w/ Air Injection Control Driver
*25 : w/ Urea Pump Control ECU
*26 : 2GD–FTV w/ Stop & Start System
*27 : Before Aug. 2017 Production
*28 : From Aug. 2017 Production
*29 : RHD *2 *28
*30 : Except *29
*31 : 2WD w/ IG1 NO. 2 Relay
7. 5A DCU–B
20A NOX PM
B
(*25)
DCU–MAIN Relay
25A DCU NO. 1
20A DCU NO. 2
G
(*25)
AN2
50A AIR PMP (*24)
50A DCU–MAIN (*25)
15A INJ (*1, *3)
30A ST NO. 2 (*26)
20A A/F HTR (*1, *3)
25A EDU (*2, *4, *19)
7. 5A ODS
30A D/C CUT
L
10A ECU–B NO. 1
20A RADIO
10A DOME
W
W
W
(*20)
W
(*20)

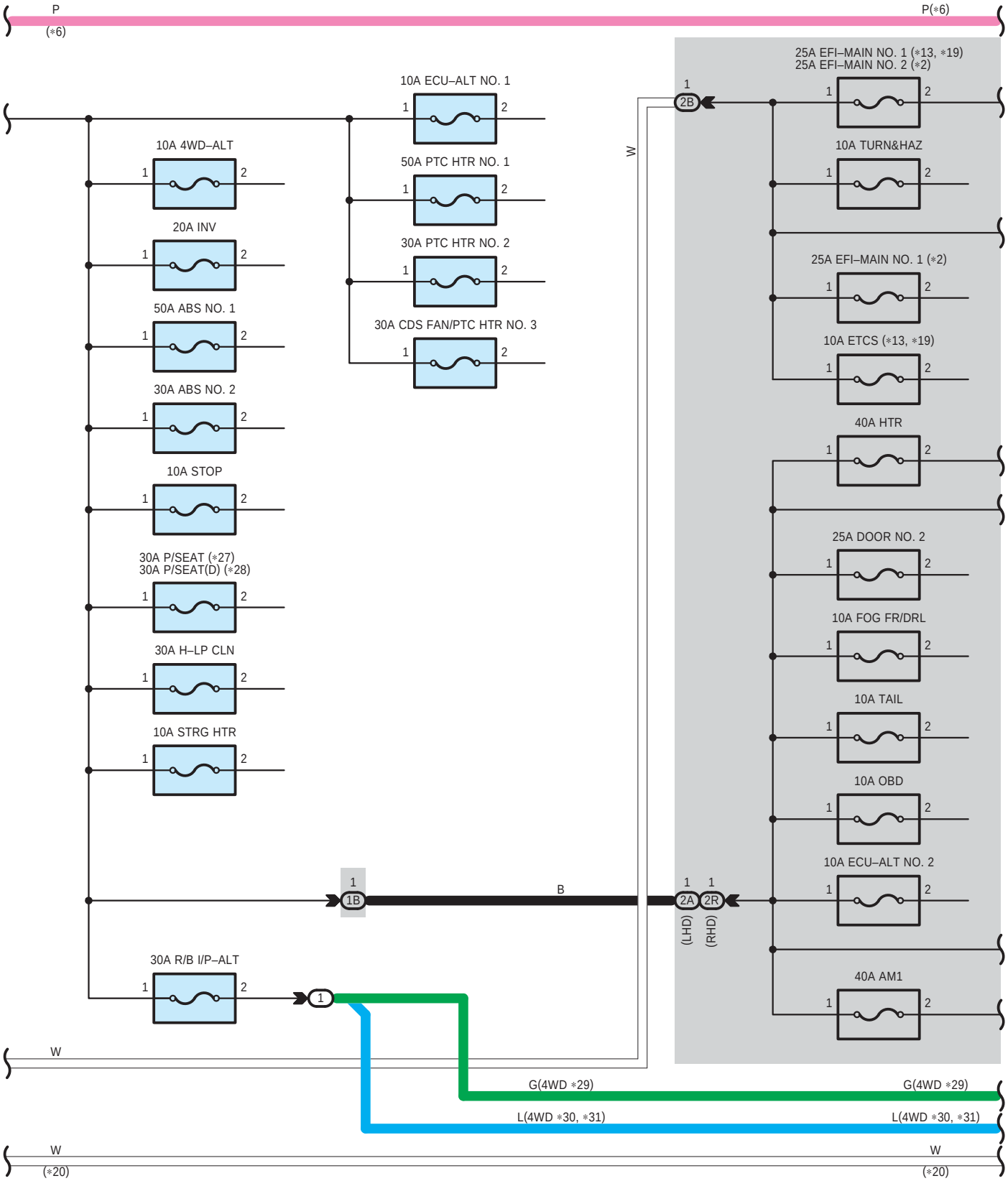
P
(*6)
P(*6)
10A ECU–ALT NO. 1
10A 4WD–ALT
50A PTC HTR NO. 1
20A INV
30A PTC HTR NO. 2
50A ABS NO. 1
30A CDS FAN/PTC HTR NO. 3
30A ABS NO. 2
10A STOP
30A P/SEAT (*27)
30A P/SEAT(D) (*28)
30A H–LP CLN
10A STRG HTR
30A R/B I/P–ALT
25A EFI–MAIN NO. 1 (*13, *19)
25A EFI–MAIN NO. 2 (*2)
10A TURN&HAZ
25A EFI–MAIN NO. 1 (*2)
10A ETCS (*13, *19)
40A HTR
25A DOOR NO. 2
10A FOG FR/DRL
10A TAIL
10A OBD
10A ECU–ALT NO. 2
40A AM1
2B
1B
2A
2R
(LHD)
(RHD)
W
B
G(4WD *29)
L(4WD *30, *31)
(*20)

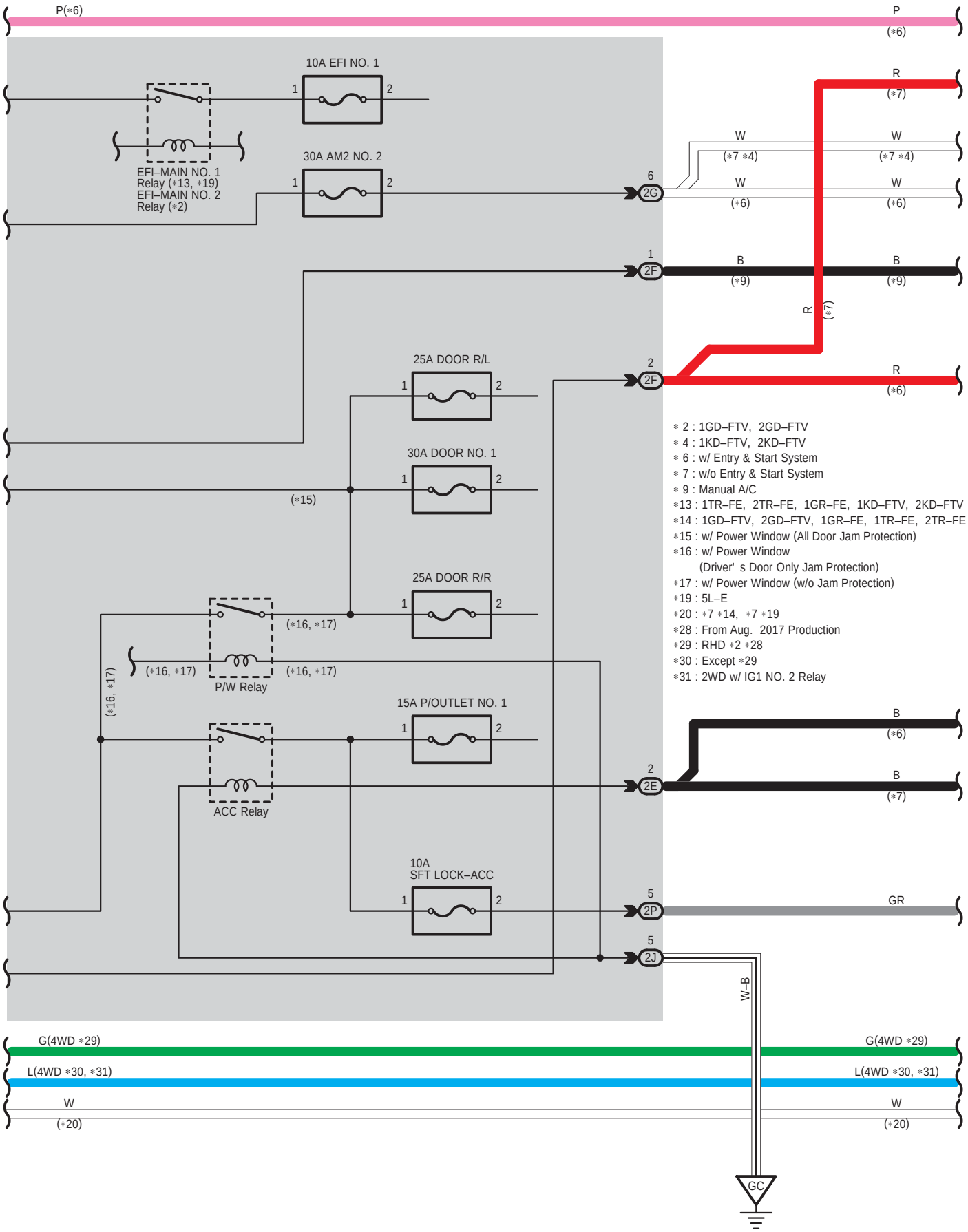


∗ 2 : 1GD–FTV, 2GD–FTV
∗ 4 : 1KD–FTV, 2KD–FTV
∗ 6 : w/ Entry & Start System
∗ 7 : w/o Entry & Start System
∗ 9 : Manual A/C
∗13 : 1TR–FE, 2TR–FE, 1GR–FE, 1KD–FTV, 2KD–FTV
∗14 : 1GD–FTV, 2GD–FTV, 1GR–FE, 1TR–FE, 2TR–FE
∗15 : w/ Power Window (All Door Jam Protection)
∗16 : w/ Power Window
(Driver' s Door Only Jam Protection)
∗17 : w/ Power Window (w/o Jam Protection)
∗19 : 5L–E
∗20 : ∗7 ∗14, ∗7 ∗19
∗28 : From Aug. 2017 Production
∗29 : RHD ∗2 ∗28
∗30 : Except ∗29
∗31 : 2WD w/ IG1 NO. 2 Relay

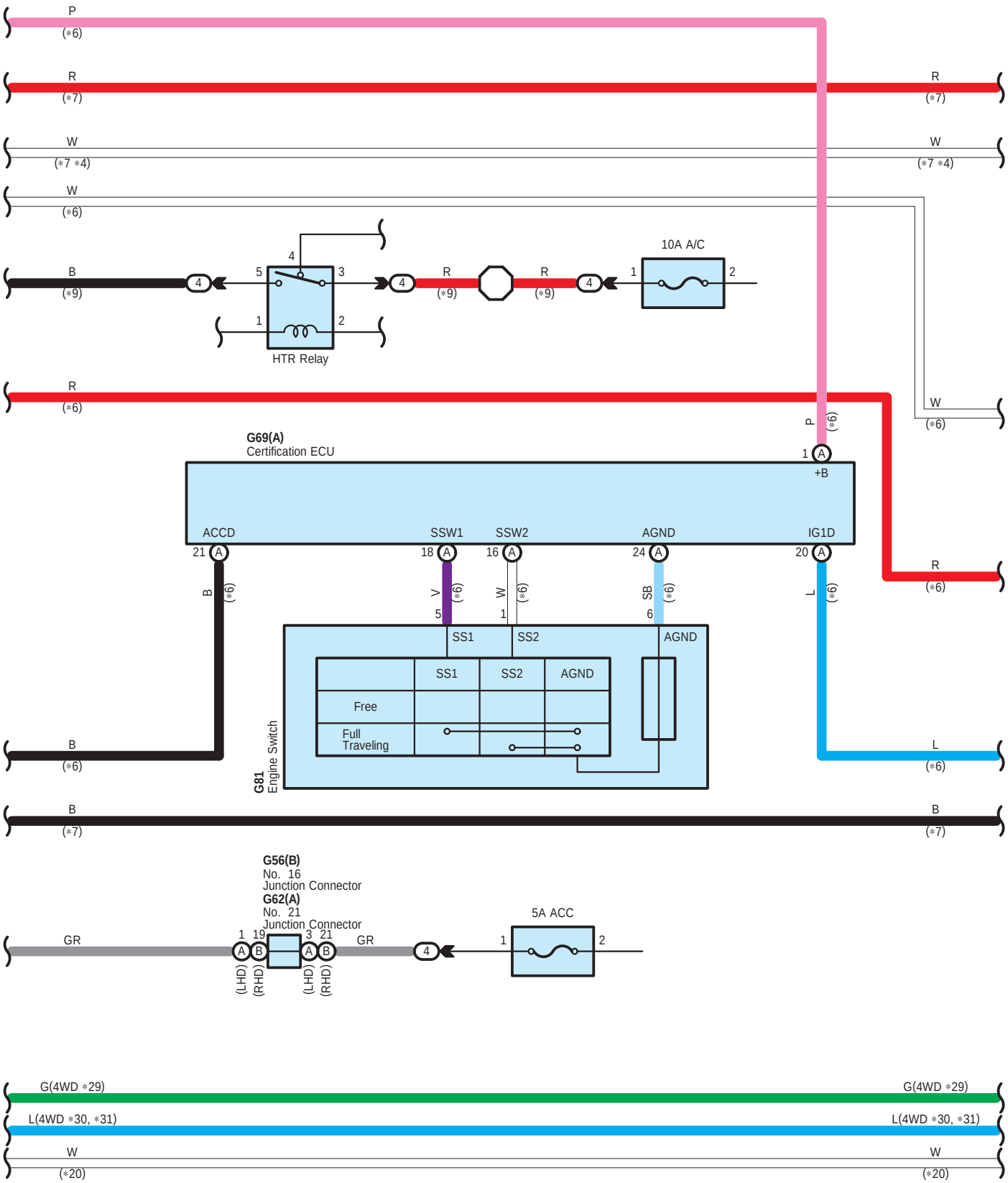
P
(*6)
R
(*7)
R
(*7)
W
(*7 *4)
W
(*7 *4)
W
(*6)
B
(*9)
4
5
4
3
R
(*9)
R
(*9)
4
1
2
10A A/C
1
2
HTR Relay
R
(*6)
W
(*6)
P
(*6)
G69(A)
Certification ECU
1
A
+B
ACCD
SSW1
SSW2
AGND
IG1D
21
A
18
A
16
A
24
A
20
A
B
(*6)
V
(*6)
W
(*6)
SB
(*6)
L
(*6)
5
1
6
R
(*6)
SS1
SS2
AGND
SS1
SS2
AGND
Free
Full
Traveling
G81
Engine Switch
B
(*6)
L
(*6)
B
(*7)
B
(*7)
G56(B)
No. 16
Junction Connector
G62(A)
No. 21
Junction Connector
GR
1
19
3
21
A
B
A
B
GR
4
1
2
5A ACC
(LHD)
(RHD)
(LHD)
(RHD)
G(4WD *29)
G(4WD *29)
L(4WD *30, *31)
L(4WD *30, *31)
W
(*20)
W
(*20)

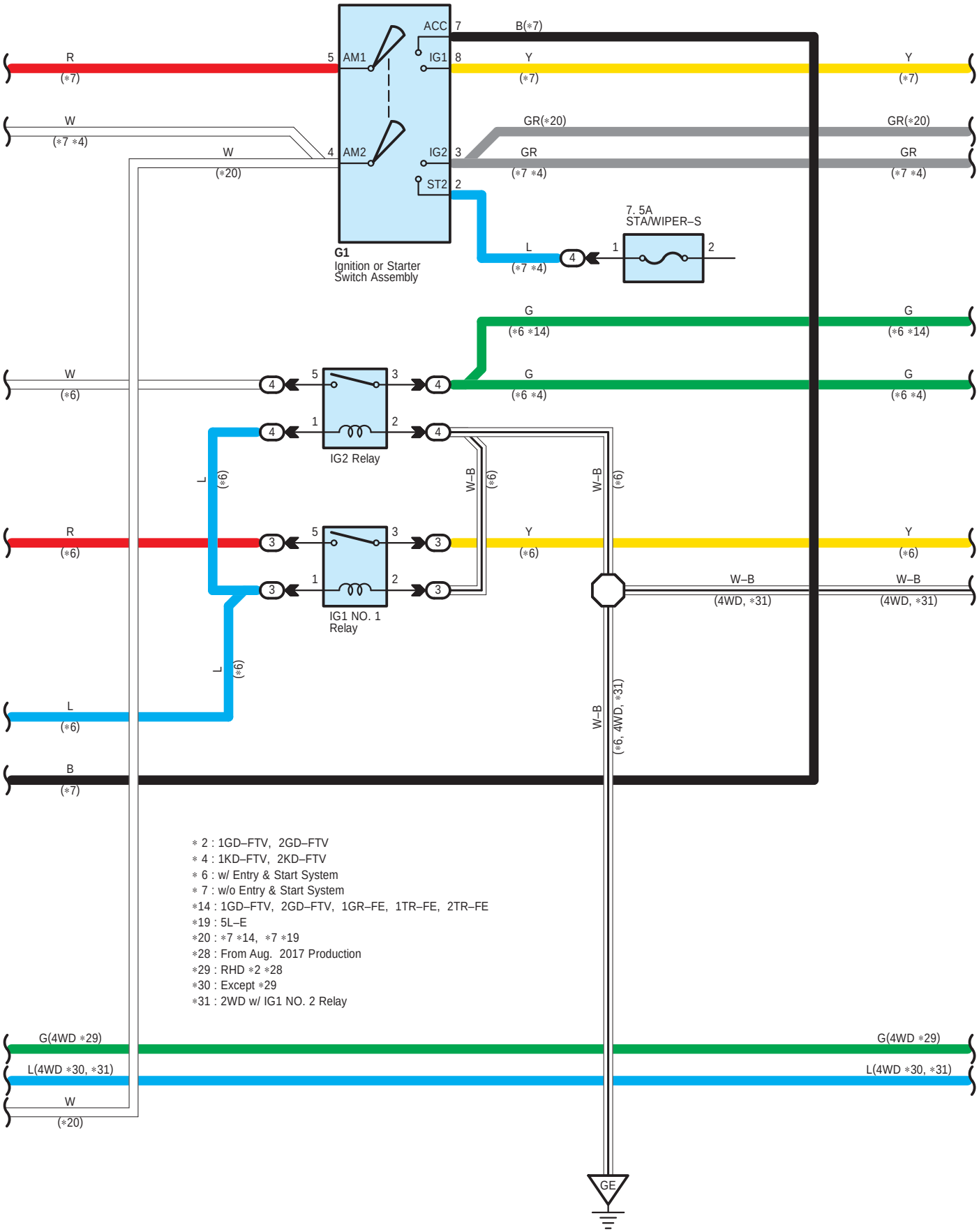


∗ 2 : 1GD–FTV, 2GD–FTV
∗ 4 : 1KD–FTV, 2KD–FTV
∗ 6 : w/ Entry & Start System
∗ 7 : w/o Entry & Start System
∗14 : 1GD–FTV, 2GD–FTV, 1GR–FE, 1TR–FE, 2TR–FE
∗19 : 5L–E
∗20 : ∗7 ∗14, ∗7 ∗19
∗28 : From Aug. 2017 Production
∗29 : RHD ∗2 ∗28
∗30 : Except ∗29
∗31 : 2WD w/ IG1 NO. 2 Relay

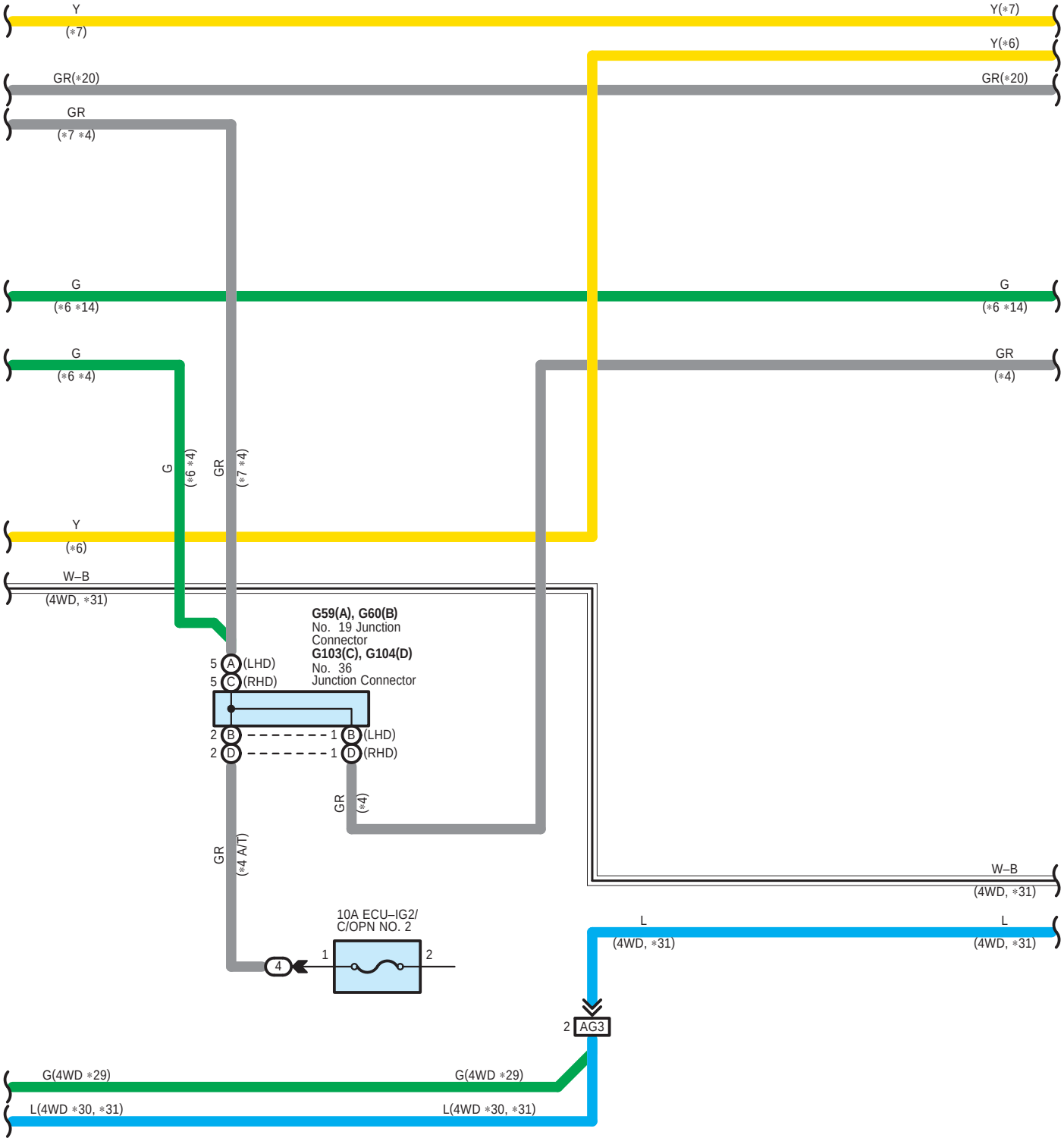
Y
(*7)
Y(*7)
Y(*6)
GR(*20)
GR(*20)
GR
(*7 *4)
G
(*6 *14)
G
(*6 *14)
G
(*6 *4)
GR
(*4)
G
(*6 *4)
GR
(*7 *4)
Y
(*6)
W–B
(4WD, *31)
G59(A), G60(B)
No. 19 Junction
Connector
G103(C), G104(D)
No. 36
Junction Connector
5 A (LHD)
5 C (RHD)
2 B
1 B (LHD)
2 D
1 D (RHD)
GR
(*4)
GR
(*4 A/T)
W–B
(4WD, *31)
10A ECU–IG2/
C/OPN NO. 2
1
2
4
L
(4WD, *31)
L
(4WD, *31)
2 AG3
G(4WD *29)
G(4WD *29)
L(4WD *30, *31)
L(4WD *30, *31)

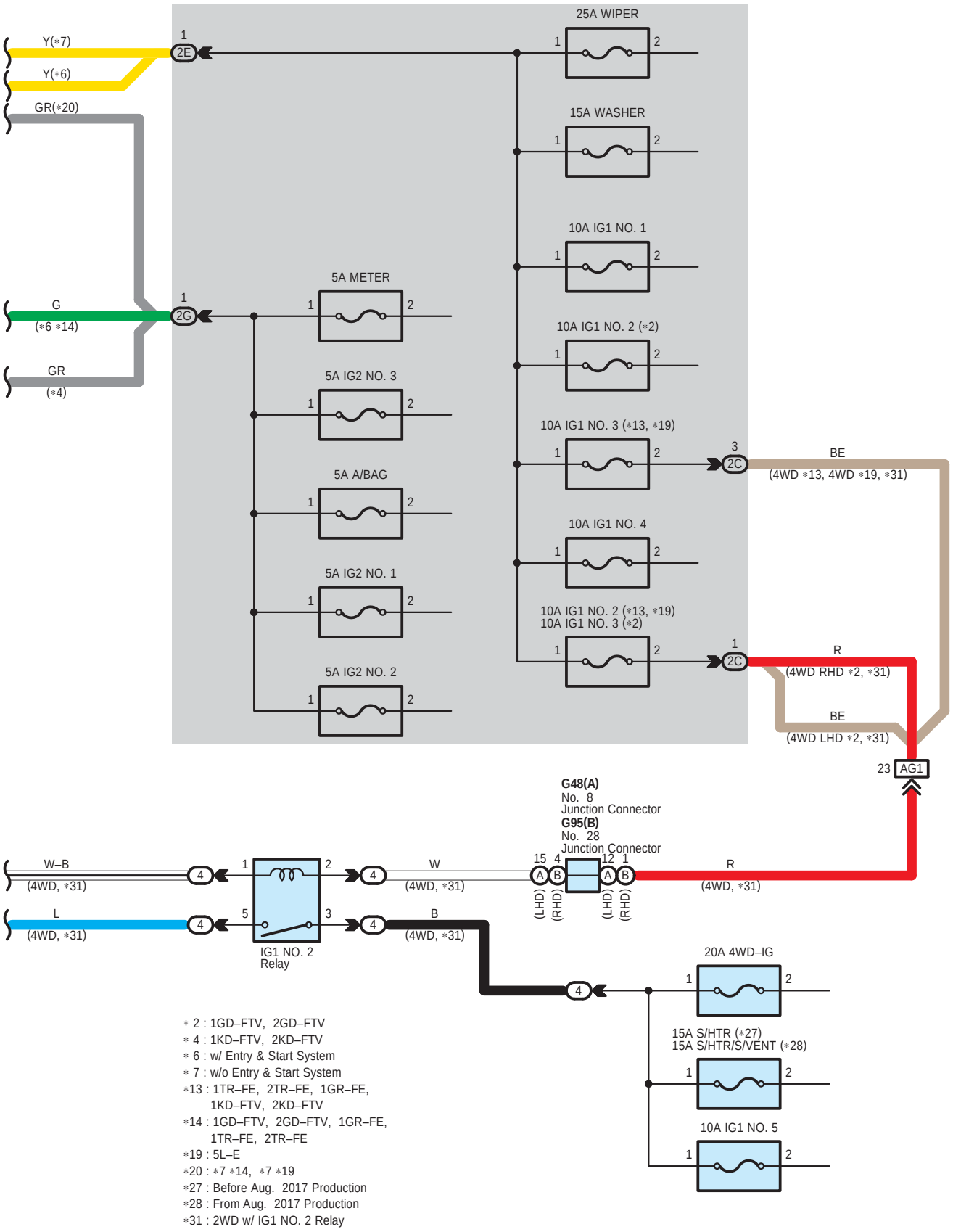


∗ 2 : 1GD–FTV, 2GD–FTV
∗ 4 : 1KD–FTV, 2KD–FTV
∗ 6 : w/ Entry & Start System
∗ 7 : w/o Entry & Start System
∗13 : 1TR–FE, 2TR–FE, 1GR–FE, 1KD–FTV, 2KD–FTV
∗14 : 1GD–FTV, 2GD–FTV, 1GR–FE, 1TR–FE, 2TR–FE
∗19 : 5L–E
∗20 : ∗7 ∗14, ∗7 ∗19
∗27 : Before Aug. 2017 Production
∗28 : From Aug. 2017 Production
∗31 : 2WD w/ IG1 NO. 2 Relay

A48

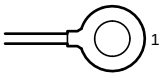


A60

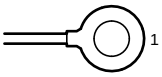


A61

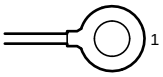


D2

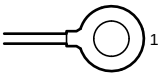


G1
White

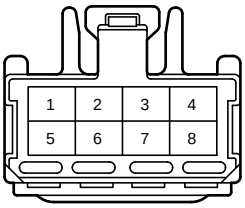


90980-11615

G48
Black

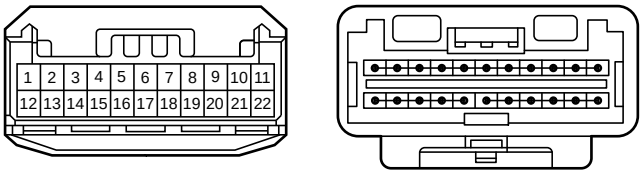


90980-12B54

G56
Black

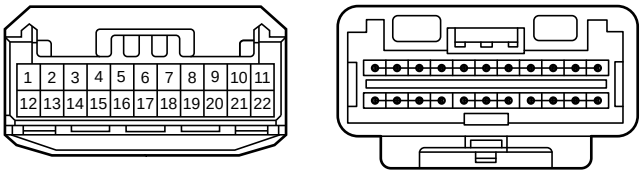


90980-12B54

G59
White

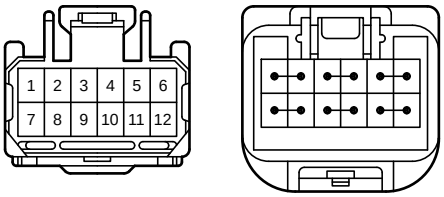


90980-11661

G60
White

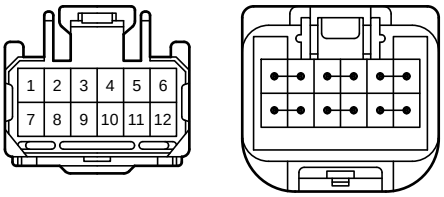


90980-11661

G62
Black

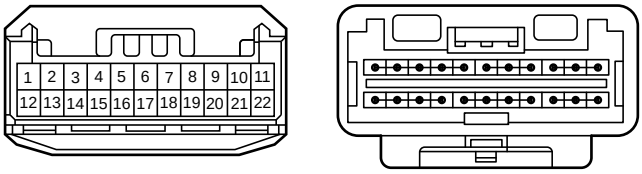


90980-12B54

G69
Black

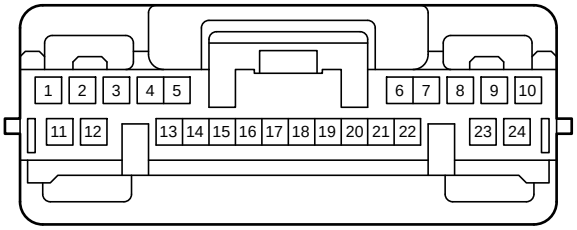


90980-12912

G81
Black

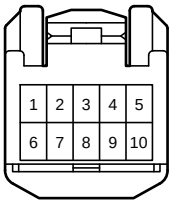


90980-12361

G95
Black

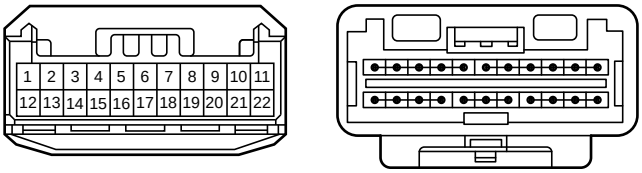


90980-12B54

G103
White

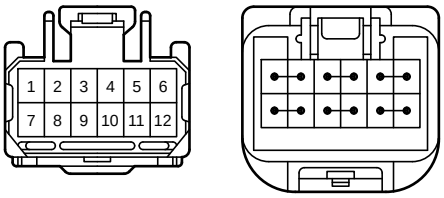


90980-11661

G104
White

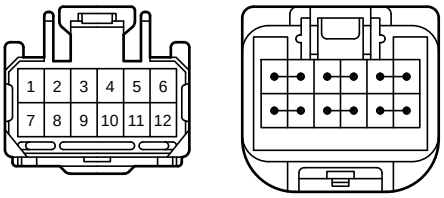


90980-11661

b1

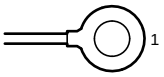


1A
White

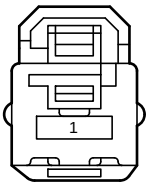


90980-12796

1B
White

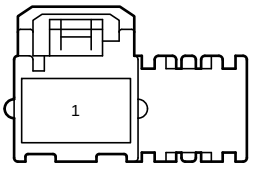


82824-74010

2A
White

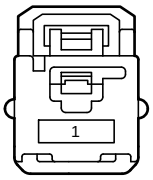


90980-12756

2B
White

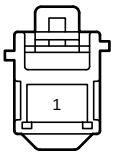


90980-10995

2C
White

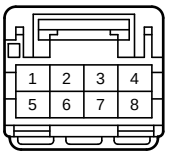


90980-12A54

2E
White

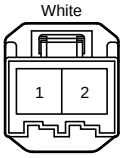


82824-30590

2F
White

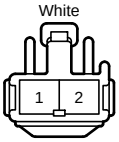


90980-10916

2G
White

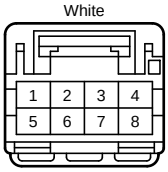


90980-12A55

2J
White

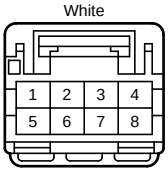


90980-12A54

2P
White

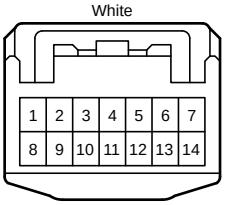


90980-12370

2R
White

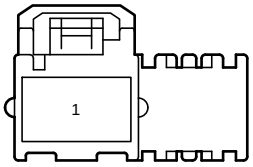


82824-74010

AG1
White

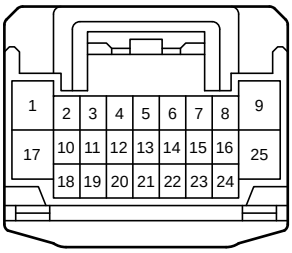


90980-12414

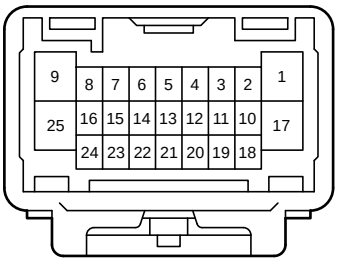


90980-12413

AG2
White

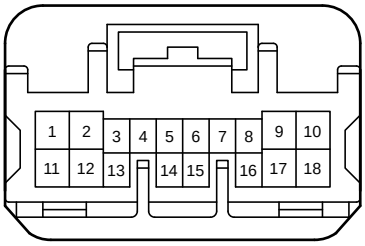


90980-12739

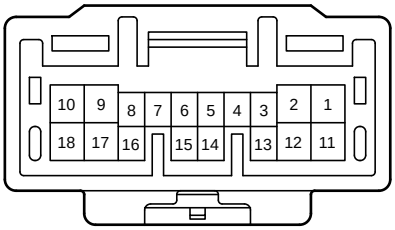


90980-12738

AG3
White

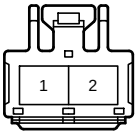


90980-11579

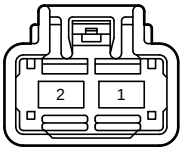


90980-11655

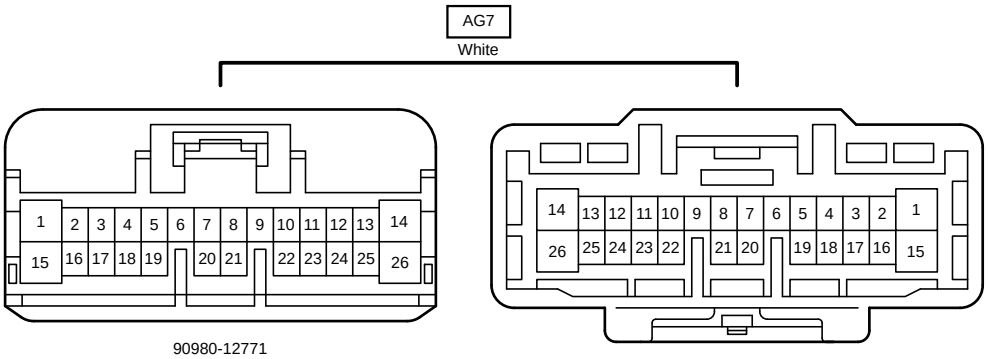


90980-12771

90980-12770

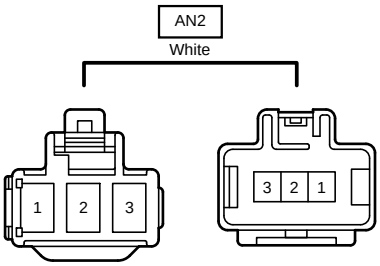


90980-10956

90980-11385