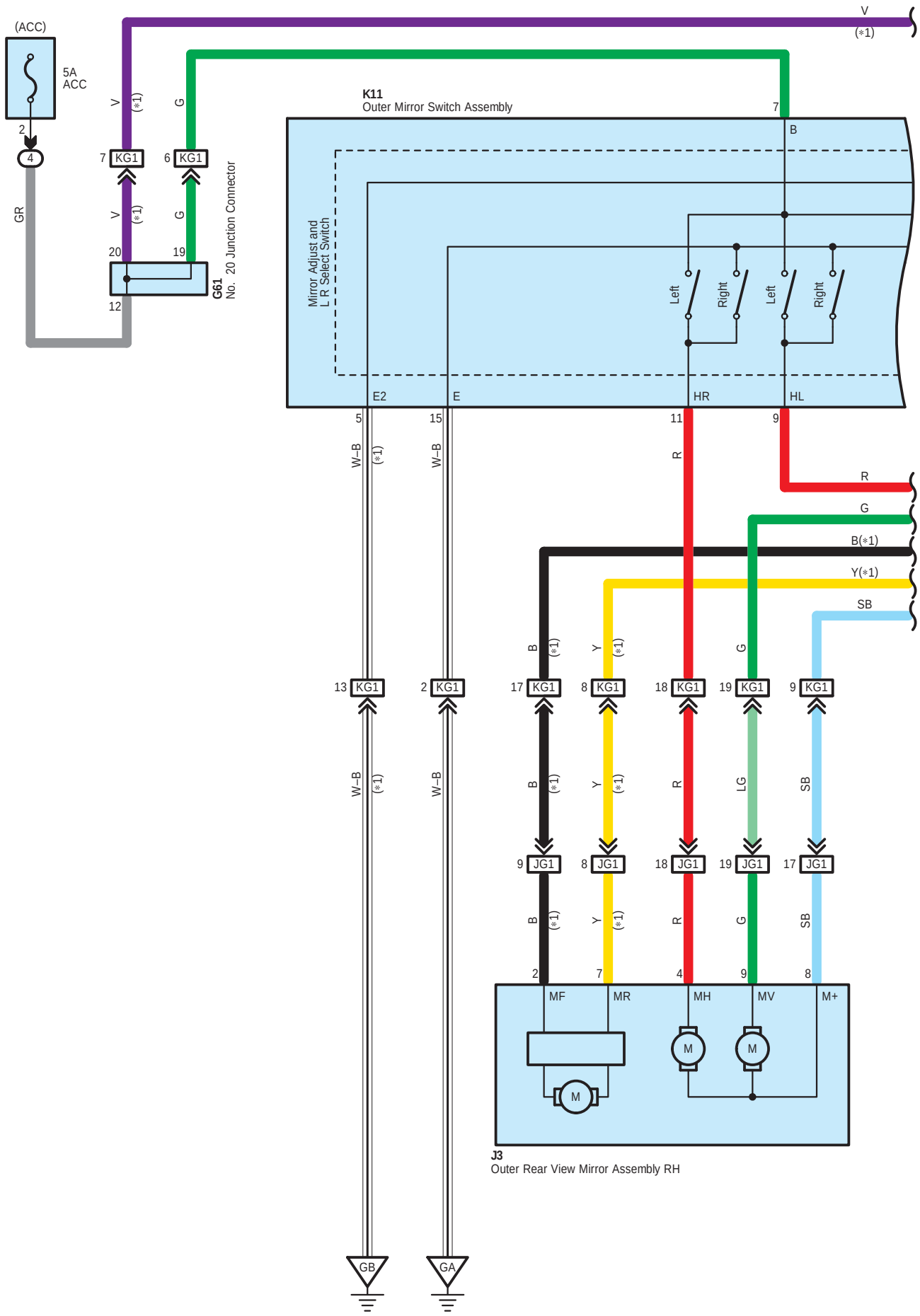
(ACC)
5A
ACC
2
4
GR
V
(*1)
G
7 KG1
6 KG1
20
19
12
G61
No. 20 Junction Connector
K11
Outer Mirror Switch Assembly
7
B
Mirror Adjust and
L R Select Switch
Left
Right
Left
Right
E2
E
HR
HL
5
15
11
9
W–B
R
G
B(*1)
Y(*1)
SB
13 KG1
2 KG1
17 KG1
8 KG1
18 KG1
19 KG1
9 KG1
9 JG1
8 JG1
18 JG1
19 JG1
17 JG1
LG
MF
MR
MH
MV
M+
M
J3
Outer Rear View Mirror Assembly RH
GB
GA

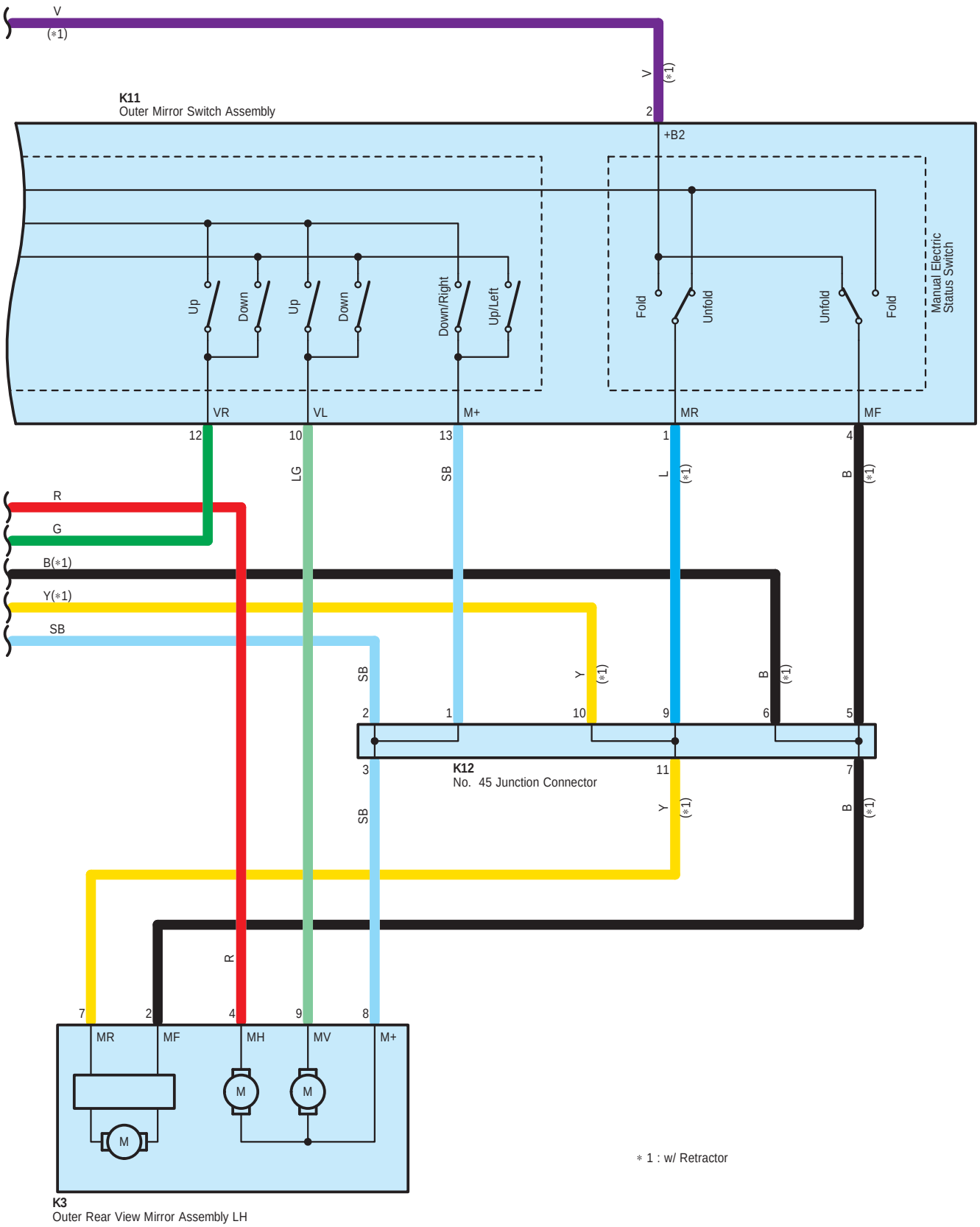
V
(*1)
V
(*1)
K11
Outer Mirror Switch Assembly
2
+B2
Up
Down
Up
Down
Down/Right
Up/Left
Fold
Unfold
Unfold
Fold
Manual Electric Status Switch
VR
VL
M+
MR
MF
12
10
13
1
4
LG
SB
L
(*1)
B
(*1)
R
G
B(*1)
Y(*1)
SB
SB
Y
(*1)
B
(*1)
2
1
10
9
6
5
3
11
7
K12
No. 45 Junction Connector
SB
Y
(*1)
B
(*1)
R
7
2
4
9
8
MR
MF
MH
MV
M+
M
M
M
K3
Outer Rear View Mirror Assembly LH
* 1 : w/ Retractor

G61
Black

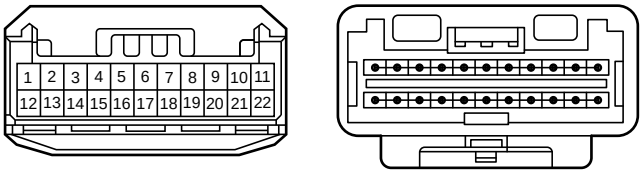


90980-12B54

J3
White

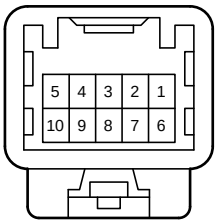


90980-12367

K3
White

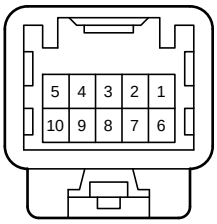


90980-12367

K11
White

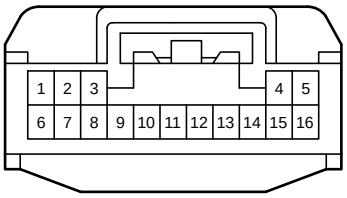


90980-12423

K12
Black

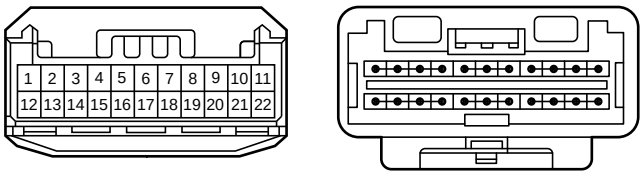


90980-12B54

JG1
White

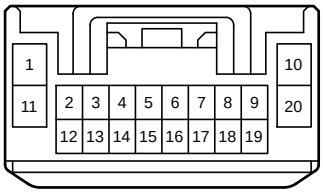


90980-12A22

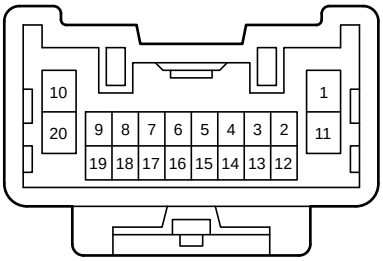


90980-12377

KG1
White

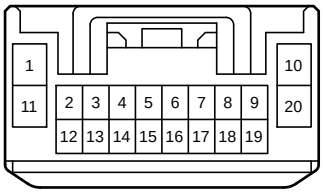


90980-12A22

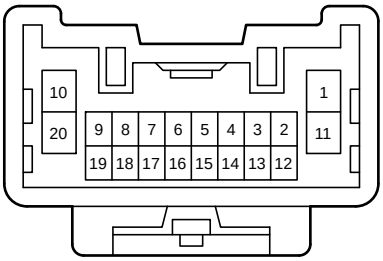


90980-12377