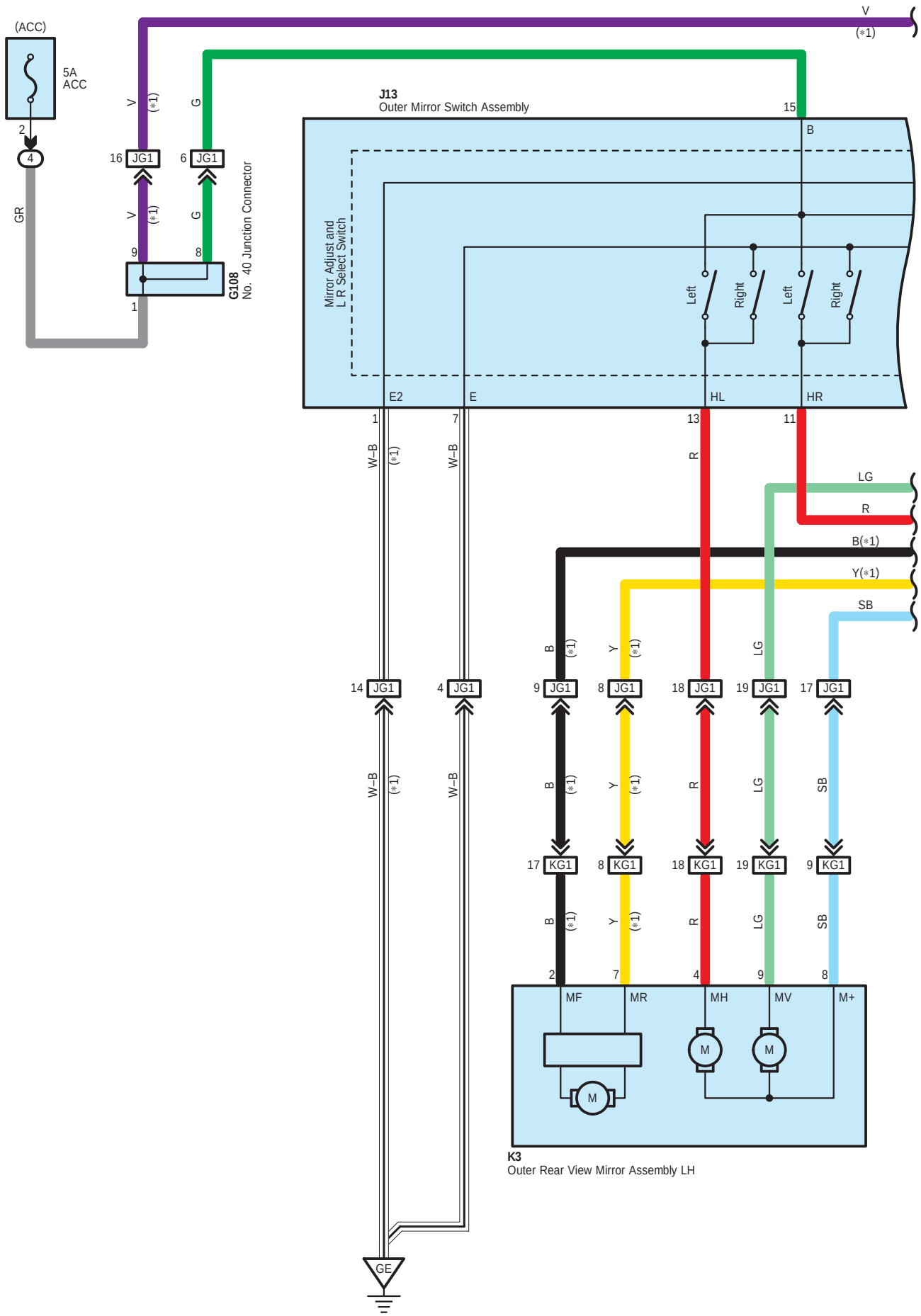
(ACC)
5A
ACC
2
4
GR
V
(*1)
G
16 JG1
6 JG1
9
8
1
G108
No. 40 Junction Connector
J13
Outer Mirror Switch Assembly
15
B
Mirror Adjust and
L R Select Switch
Left
Right
Left
Right
E2
E
HL
HR
1
7
13
11
W–B
R
LG
B(*1)
Y(*1)
SB
14 JG1
4 JG1
9 JG1
8 JG1
18 JG1
19 JG1
17 JG1
17 KG1
8 KG1
18 KG1
19 KG1
9 KG1
2
7
4
9
8
MF
MR
MH
MV
M+
M
K3
Outer Rear View Mirror Assembly LH
GE

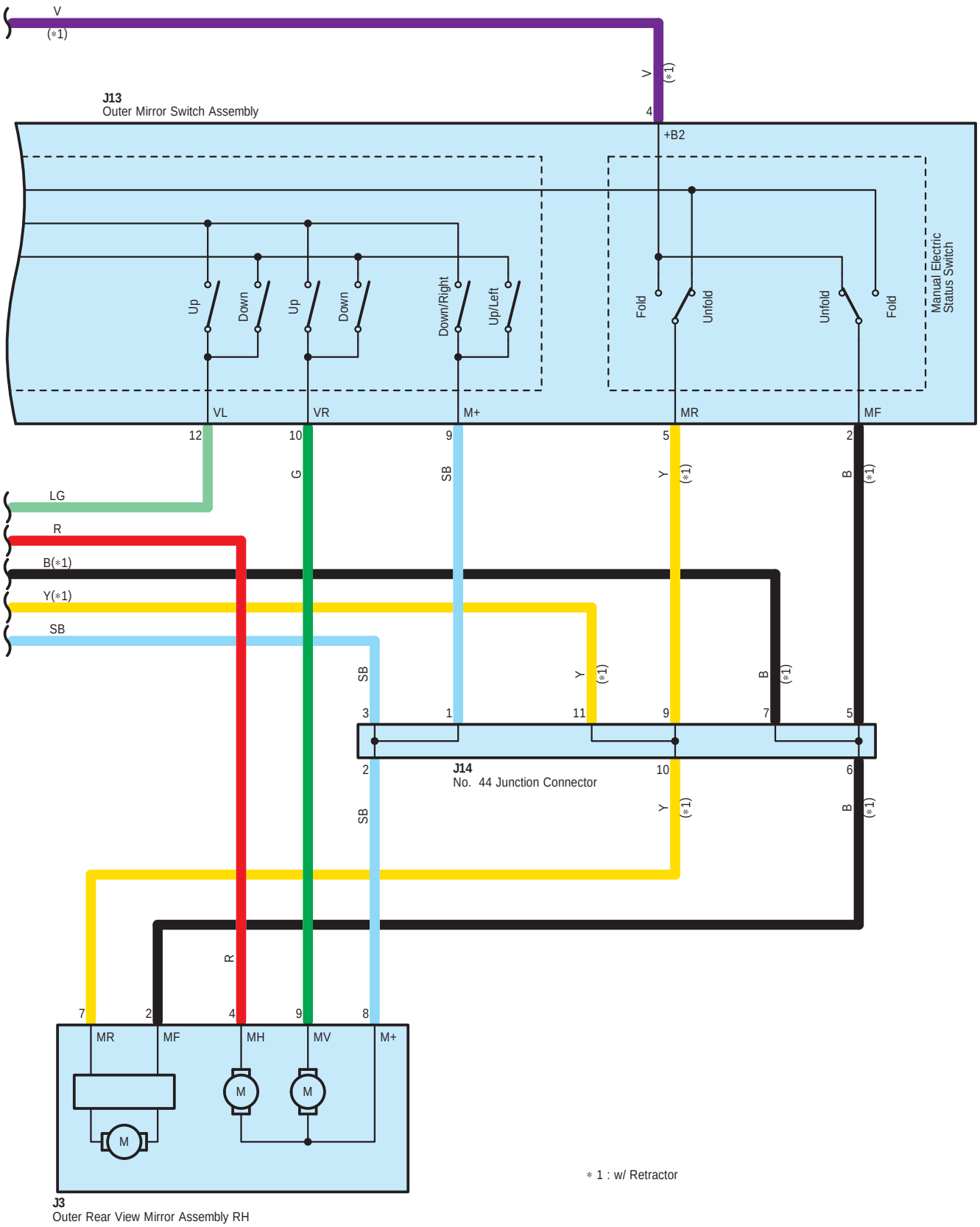
V
(*1)
V
(*1)
J13
Outer Mirror Switch Assembly
4
+B2
Up
Down
Up
Down
Down/Right
Up/Left
Fold
Unfold
Unfold
Fold
Manual Electric Status Switch
VL
VR
M+
MR
MF
12
10
9
5
2
G
SB
Y
(*1)
B
(*1)
LG
R
B(*1)
Y(*1)
SB
SB
Y
(*1)
B
(*1)
3
1
11
9
7
5
J14
No. 44 Junction Connector
2
10
6
SB
Y
(*1)
B
(*1)
R
7
2
4
9
8
MR
MF
MH
MV
M+
M
M
M
J3
Outer Rear View Mirror Assembly RH
* 1 : w/ Retractor

G108
Black

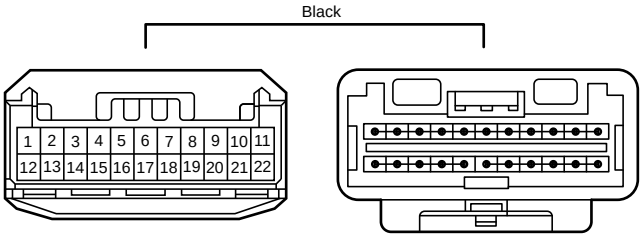

90980-12B54

J3
White

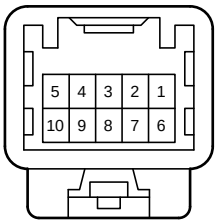

90980-12367

J13
White

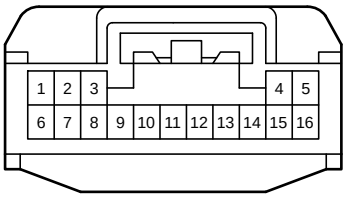

90980-12423

J14
Black

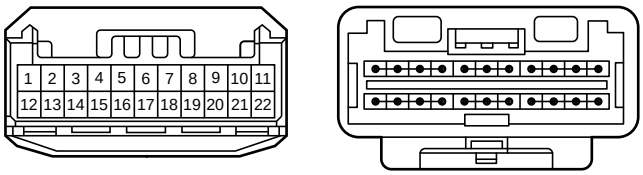

90980-12B54

K3
White

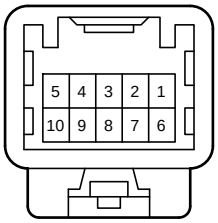

90980-12367

JG1
White

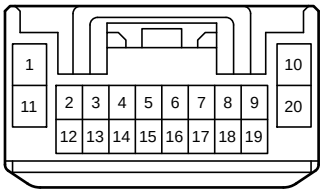

90980-12A22

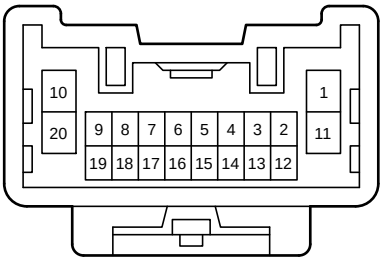

90980-12377

KG1
White

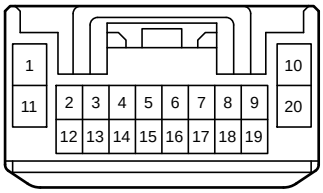

90980-12A22

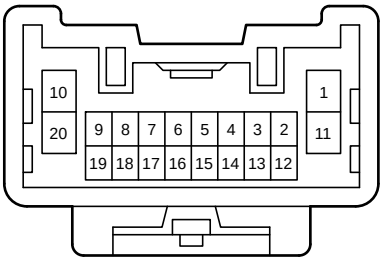

90980-12377