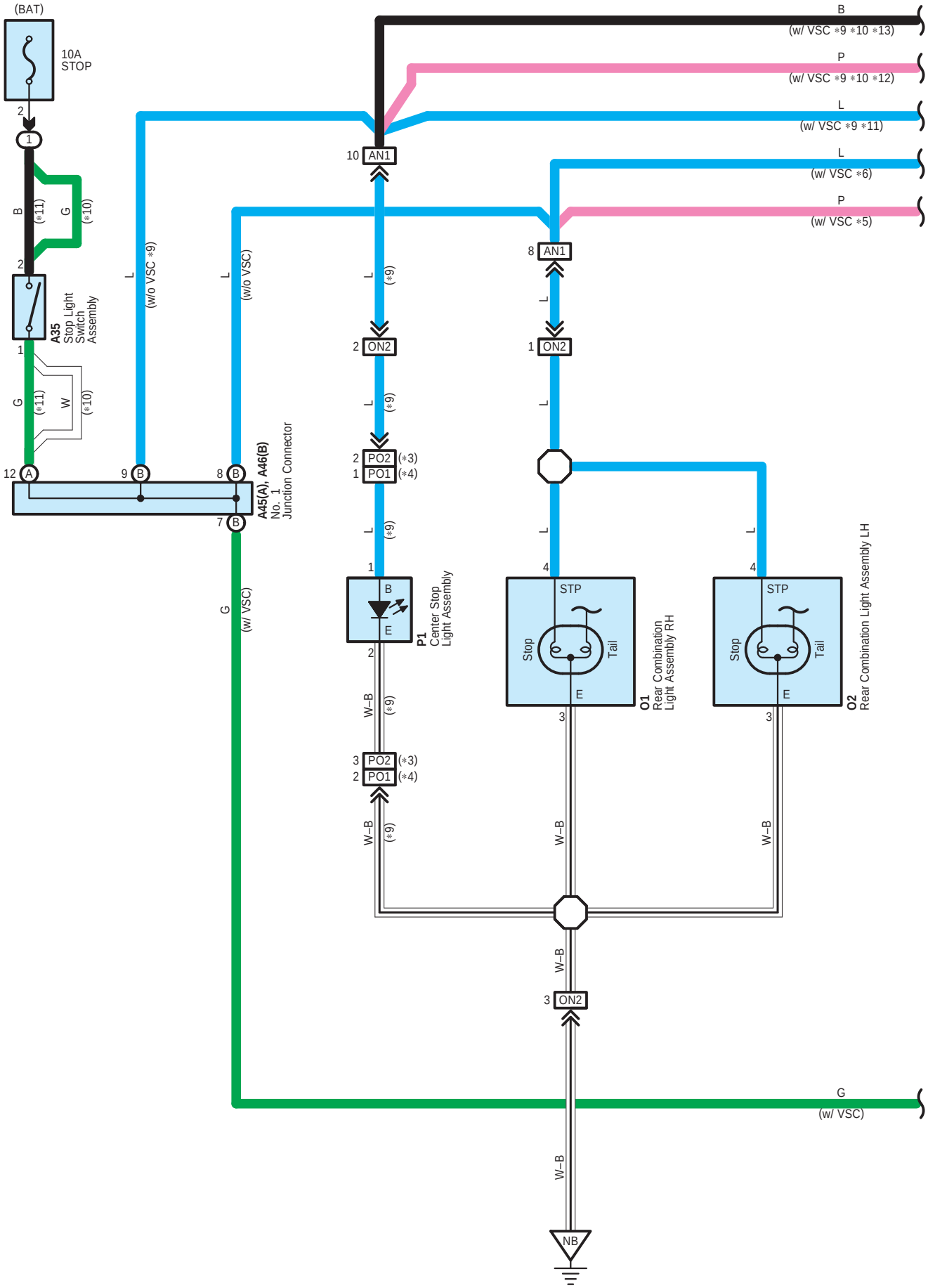
(BAT)
10A
STOP
A35
Stop Light
Switch
Assembly
A45(A), A46(B)
No. 1
Junction Connector
P1
Center Stop
Light Assembly
O1
Rear Combination
Light Assembly RH
O2
Rear Combination Light Assembly LH
AN1
ON2
PO2
PO1
STP
Stop
Tail
NB
B
(w/ VSC *9 *10 *13)
P
(w/ VSC *9 *10 *12)
L
(w/ VSC *9 *11)
L
(w/ VSC *6)
P
(w/ VSC *5)
G
(w/ VSC)
(w/o VSC *9)
(w/o VSC)
(w/ VSC)
(*9)
(*10)
(*11)
(*3)
(*4)
W–B

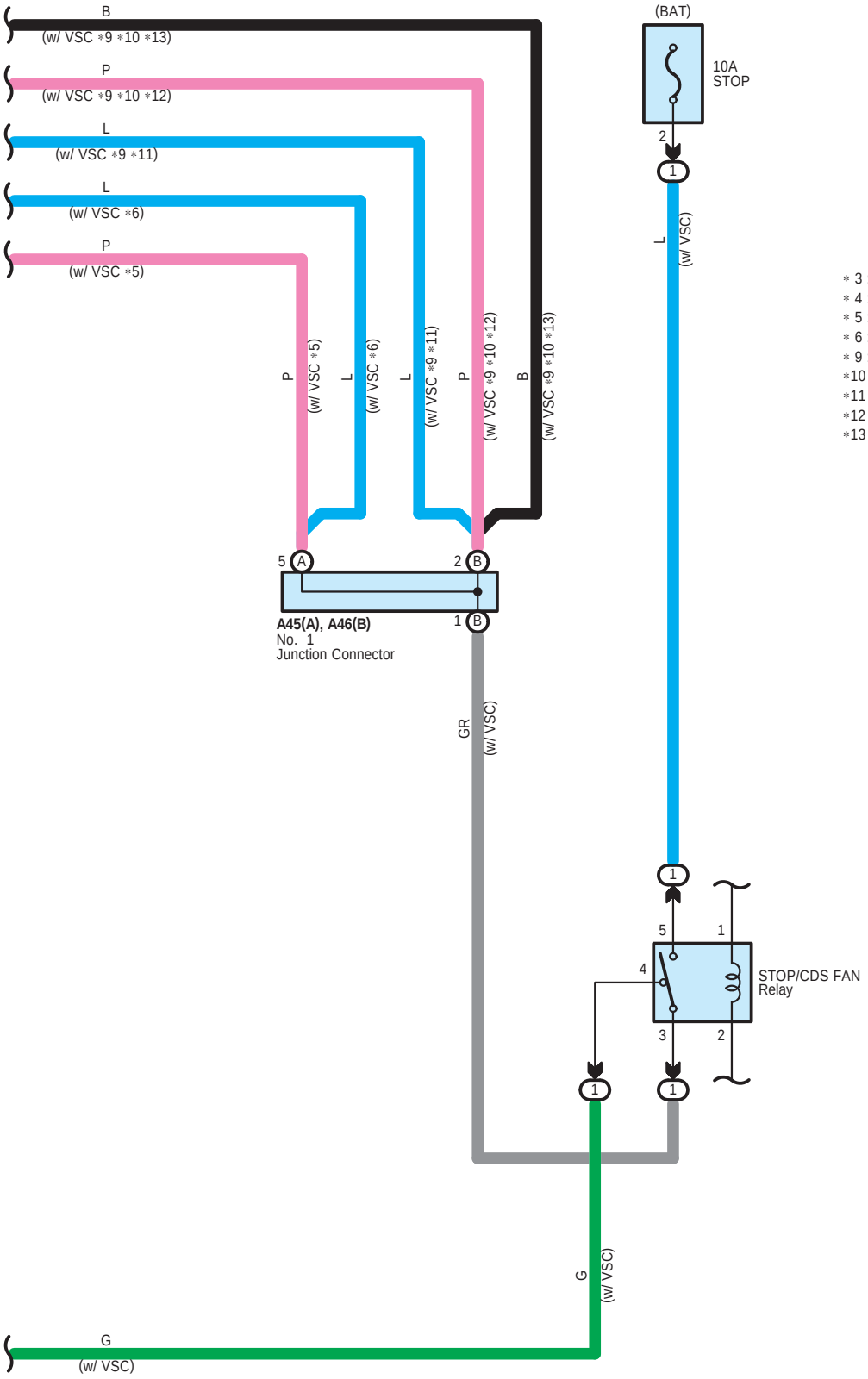

∗ 3 : w/ Rear View Monitor System
∗ 4 : w/o Rear View Monitor System
∗ 5 : Except ∗6
∗ 6 : RHD 1GD–FTV, RHD 2GD–FTV
∗ 9 : w/ Center Stop Light Assembly
∗10 : ∗6 From Aug. 2017 Production
∗11 : Except ∗10
∗12 : w/ Downhill Assist Control]
∗13 : w/o Downhill Assist Control]

A35
White

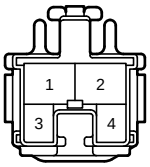

90980-11118

A45
White

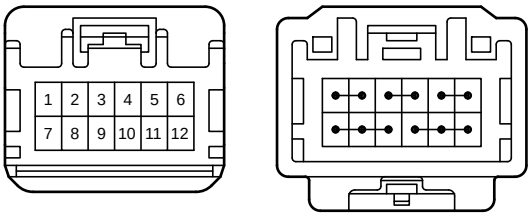

90980-12737

A46
White

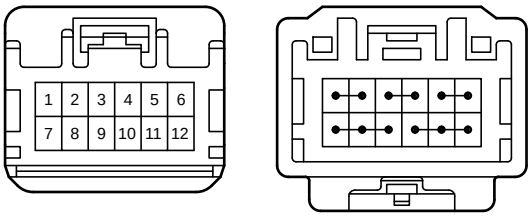

90980-12737

O1
Gray

90980-10988

O2
Gray

90980-10988

P1
Gray

90980-11003

AN1
White

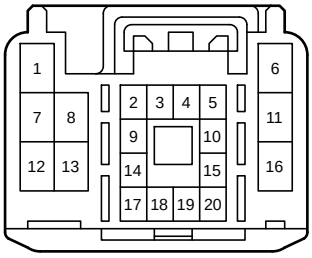

82824-52530

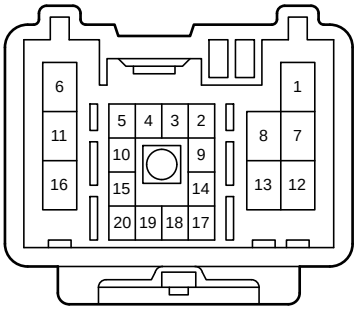

82824-52520

ON2
Black

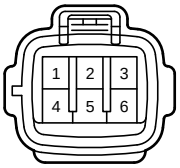

90980-11194

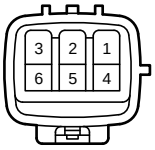

90980-11193

PO1
Black

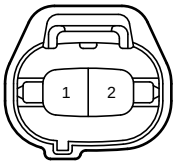

90980-11156

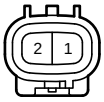

90980-11155

PO2
White

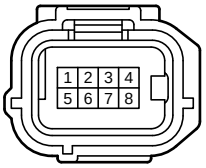

90980-12520

90980-12519