CYLINDER BLOCK

COMPONENTS

EM0E9–05

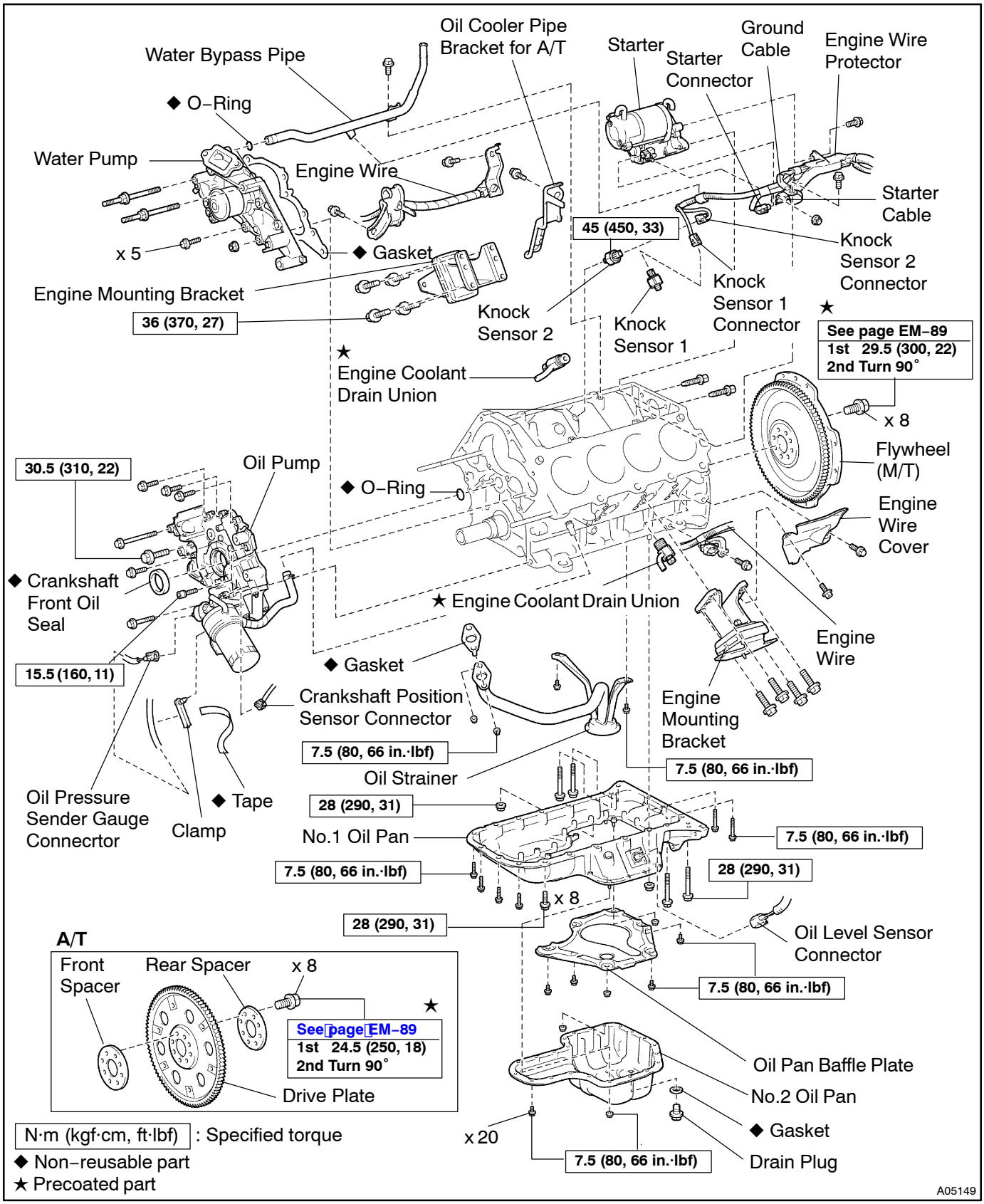

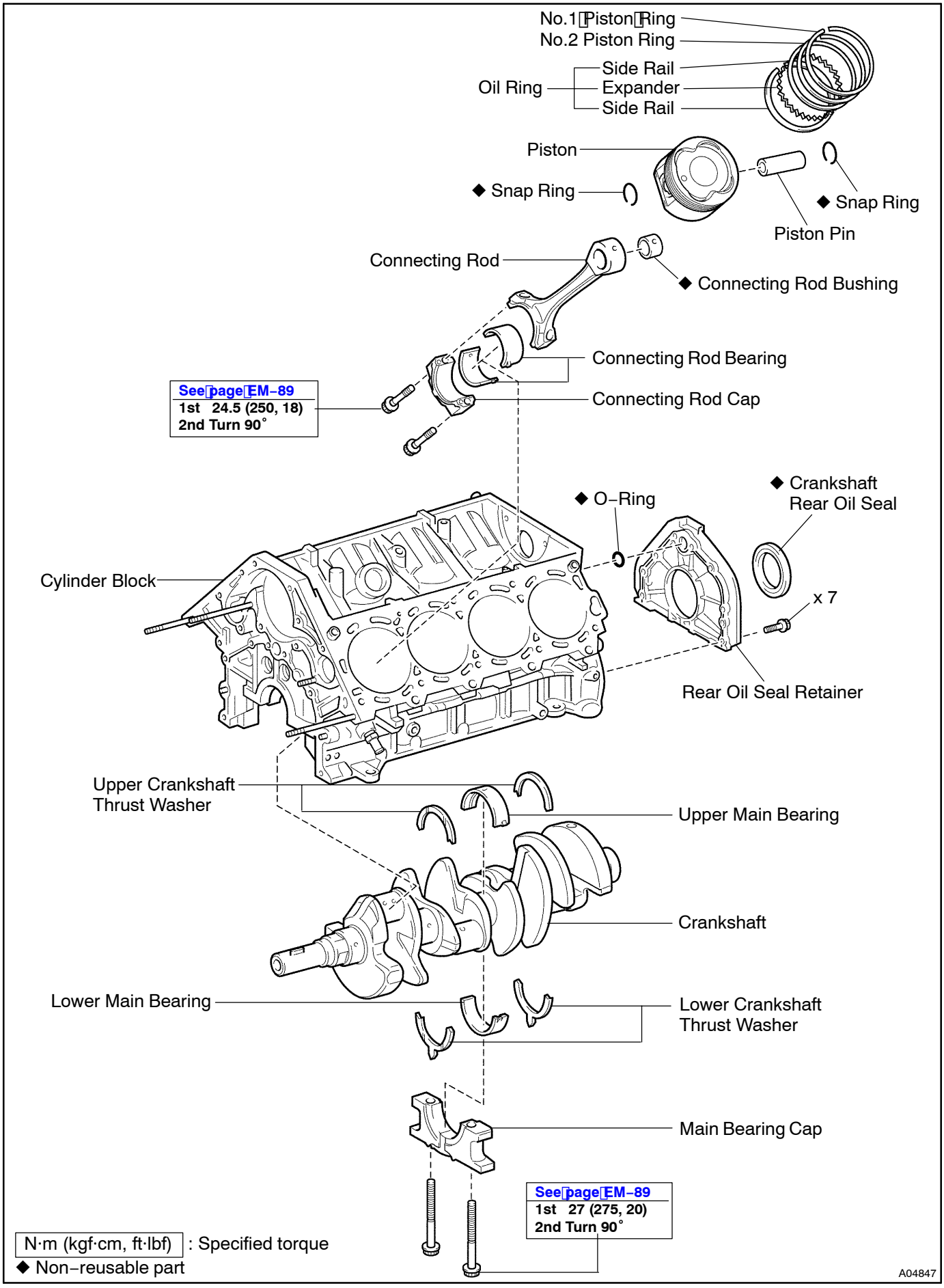
No.1 Piston Ring
No.2 Piston Ring
Oil Ring
Side Rail
Expander
Side Rail
Piston
◆ Snap Ring
◆ Snap Ring
Piston Pin
Connecting Rod
◆ Connecting Rod Bushing
Connecting Rod Bearing
See page EM–89
1st 24.5 (250, 18)
2nd Turn 90°
Connecting Rod Cap
◆ O–Ring
◆ Crankshaft Rear Oil Seal
Cylinder Block
x 7
Rear Oil Seal Retainer
Upper Crankshaft Thrust Washer
Upper Main Bearing
Crankshaft
Lower Main Bearing
Lower Crankshaft Thrust Washer
Main Bearing Cap
See page EM–89
1st 27 (275, 20)
2nd Turn 90°
N·m (kgf·cm, ft·lbf) : Specified torque
◆ Non–reusable part
A04847